E3S Web of Conferences **10**, 00114 (2016) DOI: 10.1051/e3sconf/20161000114
SEED 2016

Low energy building in MHM and PHE systems as an example of an ecological building solution

Mateusz Hodurek[1,a]

[1]*PhD Student, AGH University of Science and Technology, Faculty of Mining and Geoengineering, Department of Geomechanics, Civil Engineering and Geotechnics, hodurek.mateusz@gmail.com*

Abstract. The aim of this paper is to examine the technology of MHM and PHE systems used in the single family housing project of the architectural company Natkaniec Olechnicki Architekci. The project consists of the ten one-storey houses which will be constructed in the village Chyby, located 20 kilometers from Poznań (Poland). The unusual form of the buildings required a close collaboration between an architect, structural engineer and the contractor. Buildings fulfill low energy building condition.

1 The idea

The land on which the building will be situated is located in close neighbourhood of Kierskie lake near Poznań. The investor and architect decided to create there 10 single-family houses.

Figure 1. Settlement with 10 single-family houses [1].

The buildings have simple form with symmetric gabled roof. Configuration of the roofs was dictated by solar panels and gaining provided from solar heating. The project assumes that the buildings will not only be low energy but also due to photovoltaic installation energy autonomy energetically safety. The project was prepared by Natkaniec Olechnicki Architekci and the structural design developed Pracownia Inżynierska Czesław Hodurek. The unusual form of the buildings required a close collaboration between the architect, the structural engineer and the contractor.

Figure 2. Visualisation of the building Z [1].

Figure 3. Visualisation of the building W [1].

2 Construction and applied materials

2.1 Description of designed construction

The analysed buildings are supported on foundation slab 20cm thick with peripheral beam 20x94cm. Due to complicated ground conditions indirect foundations on CFA columns are applied. Load bearing structure is made in MHM system (walls) and PHE system (slabs). Walls on ground floor are located on larch board 310 mm width and 30 mm thick. The top level of foundation slab is 12 cm below ground, consequently water insulation is raised 50 cm above the ground. The MHM wall is connected with the foundation by steel connectors presented below (see figure 4).

[a] Corresponding author: hodurek.mateusz@gmail.com

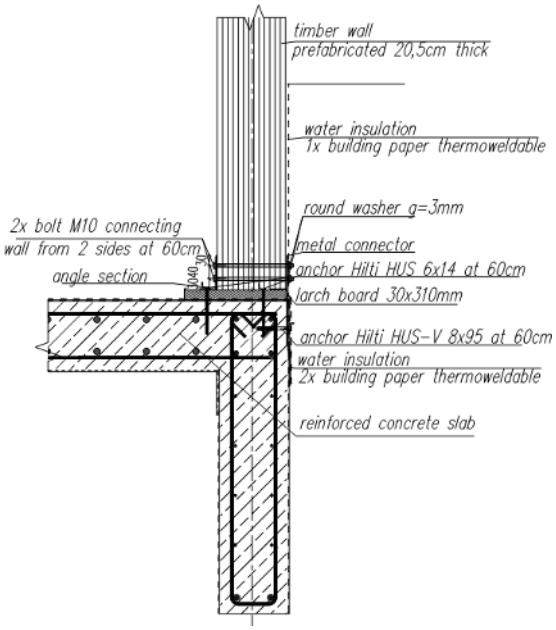

Figure 4. Detail of foundation slab and MHM wall [2].

In order to fulfil ultimate and serviceability limit states the design frame from C-section C200 was proposed. Additionally, the hangers from I-beam HEA 200 or two C-section UPE 200 are recommended. The roof formwork is a queen post. The proposed rafters are Steico joist SJ60/360. Steico joist with 40 cm spacing were also applied to create subfloor where all installations are located.

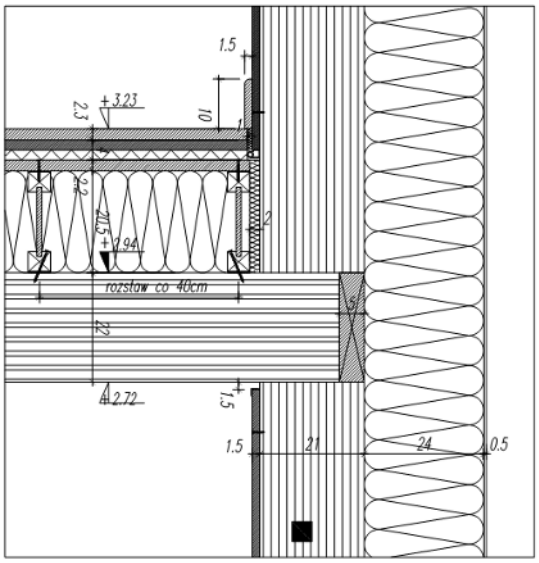

Figure 5. Detail of subfloor [1].

2.2 Timber walls in MHM system

Massive-Holz-Mauer is a high-tech construction material. The system uses 3 dimensional CAD program which creates model and stages for separate elements such as: knee walls, lintels, gablets and walls with openings on doors and windows. All drills in the elements for installations such as water, heating and electricity have to be introduced into the element by computer-controlled tools. Fully automated production process allowed achieving accuracy level of +- 2mm.

MHM system is made from coniferous wood panels sorted according to width. Timber is technically dried up to 15% +-3% with 23mm thickness. These wood panels are brought together into a continuous strand by a finger jointing station which is integrated in the plant. The lamella is profiled on one side to create a finely-structured uniform bottom layer. To achieve requested dimensions individual layers of board are stacked one on top of the other, compressed and joined together by aluminium groove pins layer by layer (according to ETA approval ETA-13/0801). Final product ranks between thickness of 10 to 24 cm, width up to 120cm and the length from 4m up to 12m. The only waste from production occurs from planning, which should not exceed 5%. According to fire standards analyzed material is classified as F90B and one storey house should fulfil F30B fire retardancy standard.

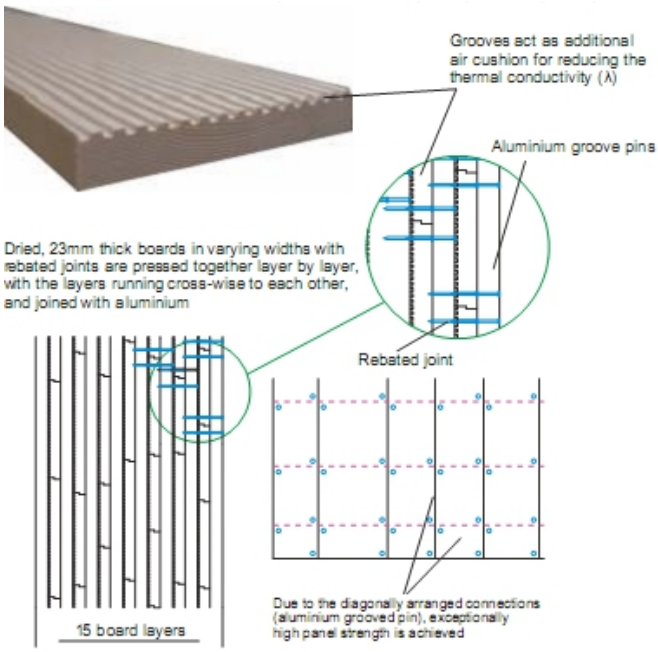

Figure 6. Cross-section by MHM wall [8].

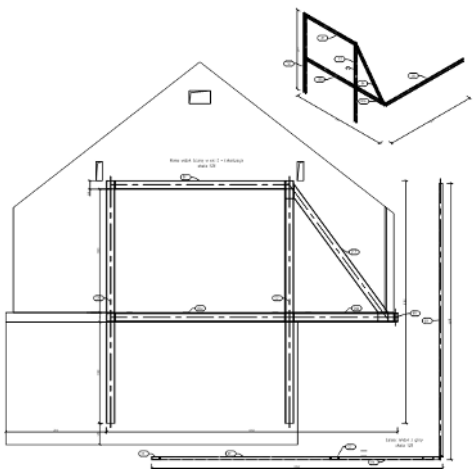

Figure 7. Steel structure in building Z – front view, top view and 3D view [2].

2.3 Timber slabs in PHE system

Profiled timber elements (PHE) complete the MHM wall system. Both systems together create complete structural construction made with solid timber. Technical data for PHE system is the same as MHM wall element.

2.4 Steel structure

To fulfill ultimate and serviceability limit states in buildings W and Z steel structure is used. On the other hand in building Z design frame from C-section C200 is proposed to minimize cantilever deflection.

In order to reduce span between supporting hangers from two C-section UPE 240 and columns from square pipe 100x100x5 were recommended.

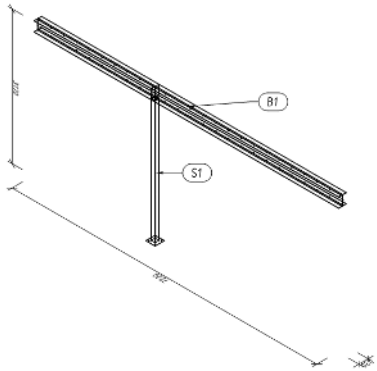

Figure 8. Steel hanger in building Z – 3D view [2].

The hanger presented above (see figure 8) bears load from MHM system 20.5 cm thick. Hanger supports loadings on column and walls. The figure 9 below shows solution of mounting MHM wall on 2 UPE 240 C-section.

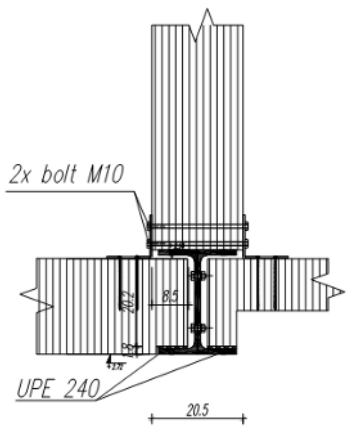

Figure 9. Steel hanger in building Z – cross section [2].

In the building W lintel from two UPE 240 C – section supported on MHM wall was designed.

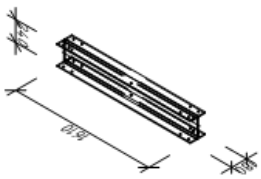

Figure 10. Lintel in building W made from 2 UPE 240 profiles [2].

In building W part of the first floor is overhanged. To connect slab with beam or wall "plate" steel elements were recommended.

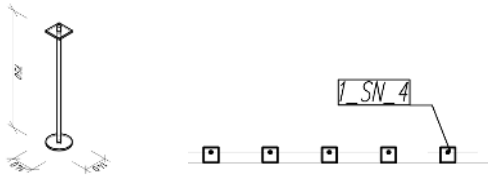

Figure 11 and 12. "Plate" – steel element connecting PHE slab with beam or wall – 3D view and location in 1_SN_4 [2].

In the building W introduce frames made with I-beam HEA 200 and square pipe 120x120x5 as a column were recommended. This solution shortened span between supporting and fulfilled serviceability and ultimate limit states.

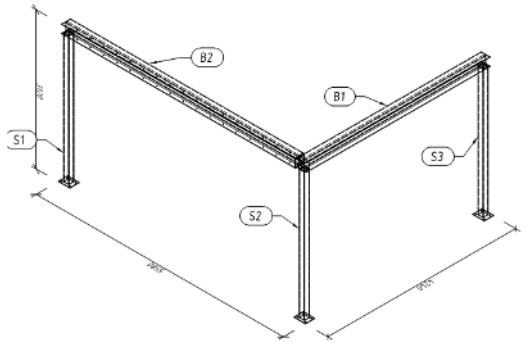

Figure 13. Frame in building W. Columns are made from square pipes 120x120x5 and beams are made from HEA 200 [2].

2.5 Steico components

Steico insulation products are characterized as environment friendly. The wood fibre insulation is formed from raw timber. The production process of Steico insulation includes heating wood chips through the defibration process, drying fibres and forming mats. The final product fulfils EN 13171 standards.

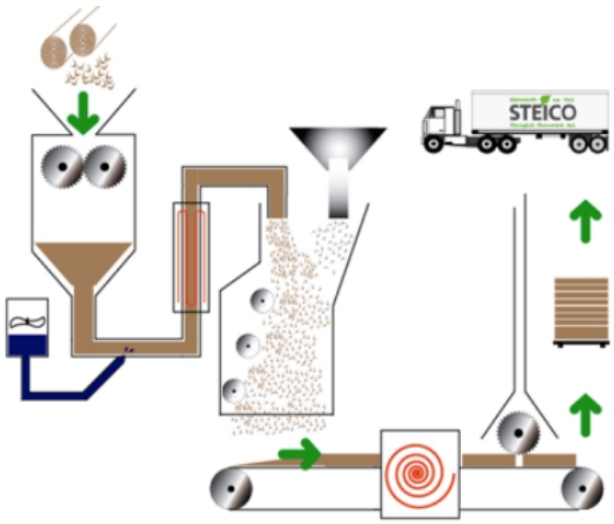

Figure 14. Production process of insulating mat [7].

The applied rafters and the joist Steico product is an I-web and consists of flanges made with timber according

DOI: 10.1051/e3sconf/20161000114

to the norm EN 385:2001. The web consist of hard fibreboard in accordance with EN 622-2:2004. The connection between the web and the flange is made by gluing the web into a groove in the centre of the wide face of the flange [7].

Figure 15. Joist with solid timber flanges - cross section [7].

2.6 Noise insulation

The sound insulation is important for human comfort. The project has to include solution of connecting elements and insulation openings.

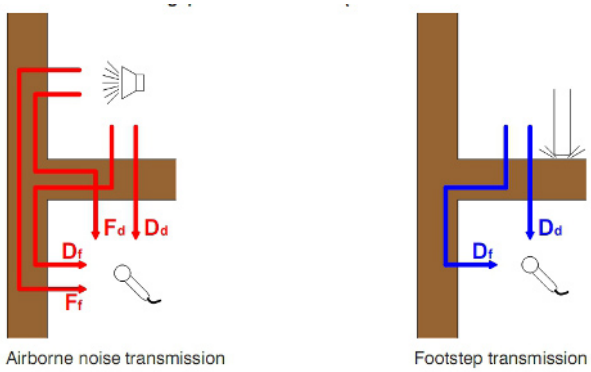

Figure 16. Noise transmission [8].

To prevent noise two-layer wall was recommended. This kind of wall consists of plasterboard from two side filling with mineral wool which reduces noise transmission.

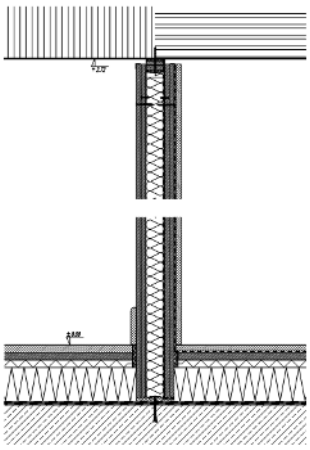

Figure 17. Cross section through the partition wall [1].

Depending on the type of construction walls and ceilings the project may require additional solutions to reduce noise transmission. The figures 18 and 19 below show when additional bearings are required. If the facing layers on walls and ceilings are applied no bearings are required. On the other hand if the facing layers are not applied we have to apply bearings. When extra ceiling layers are applied footstep transmission is reduced.

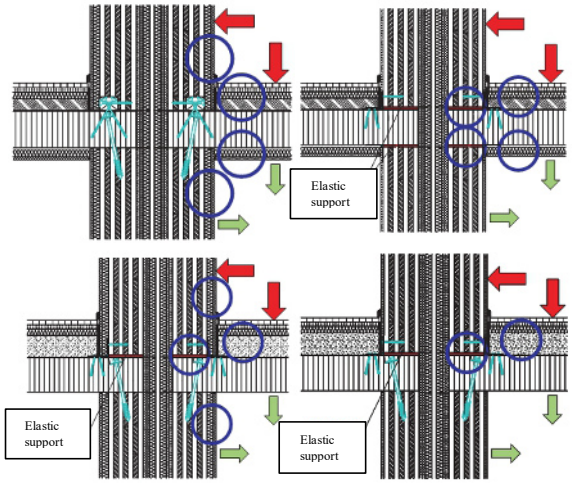

Figure 18. Noise transmission. Location of elastic supports to reduce noise transmission [8].

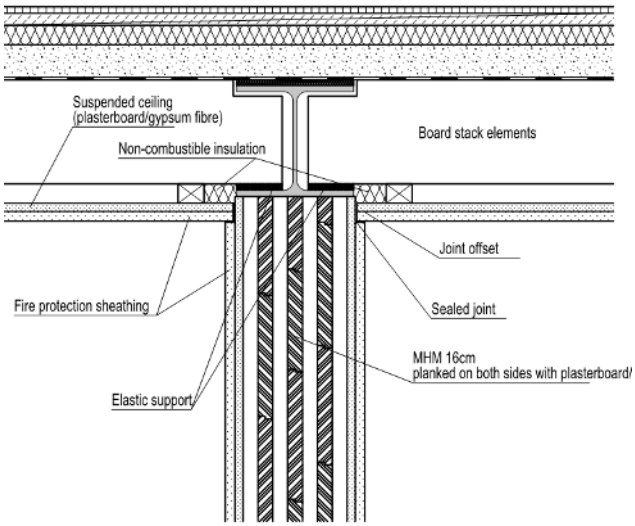

Figure 19. Noise transmission. Location of elastic supports to reduce noise transmission [8].

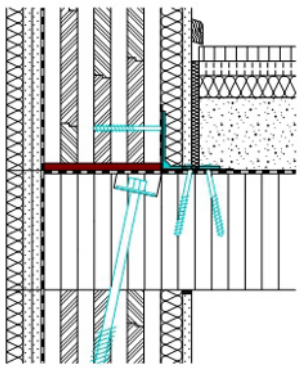

Figure 20. Elastic support - separating construction elements to prevent noise transmission [8].

3 Low energy building solutions

3.1 Low energy building criteria

The low energy building has to fulfil certain criteria. According to NFOŚiGW (National Fund for Environmental Protection and Water Management)

fulfilling standard NF40 gives subsidy for construction or to buying house. NF40 means that energy demand for heating and ventilation does not exceed 40 kWh/m^2·year.

Low energy houses are required to achieve a whole building air change rate of no more than 1.0 ac/hr under forced pressurisation and depressurisation testing at 50Pa minimum according to PN-EN 13829 standard. Such a high tightness of building reduces heating in winter and creates optimal thermal comfort for occupants.

Proving compliance on site blower door testing by certified testers is used.

Ventilation in the low energy building should be mechanical with a heat-recovery system. Efficiency of the heat-recovery system is more than 85%. It is ensured by rotary wheel or fixed play exchanger. Energy consumption of the ventilator is less or equal 0.45W/m^3·hr.

3.2 Thermal insulation – materials and barriers

MHM walls have very low coefficient of thermal conductivity λ = 0.094 W/(m·K) according to MFPA Leipzig GmbH or λ = 0.11 W/(m·K) according to Polish Standards. The external walls are composed with MHM 20.5cm thick and Steico protect dry L240. For Steico protect dry L240 declared thermal conductivity equals to 0.041 W/(m·K). Heat transmission coefficient of external wall barrier equals U_c = 0.11 [W/m^2·K] and fulfils standard of $U_c \leq 0.12$.

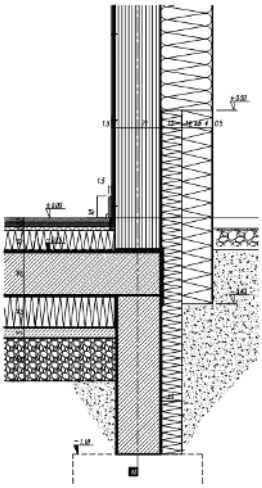

Figure 21. Architecture detail of foundation and wall barrier – cross section [1].

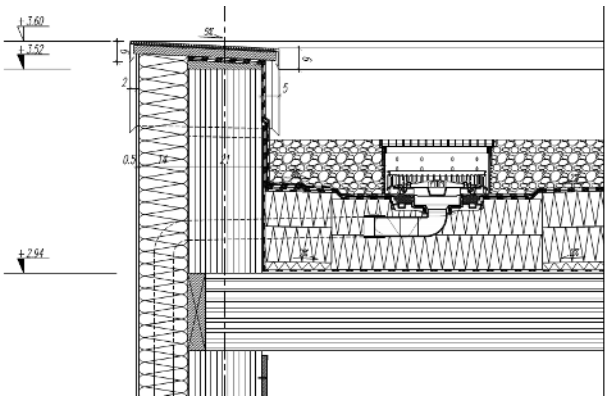

Figure 22. Architecture detail of terrace – cross section [1].

For slab supported on ground expanded polystyrene (EPS) as insulation was applied. Heat transmission coefficient of this barrier equals to U_c = 0.11 [W/m^2·K] and fulfils criteria $U_c \leq 0.12$.

Heat transmission coefficient of terrace equals to U_c = 0.11 [W/m^2·K]. To insulate terrace expanded polystyrene (EPS) was applied. This solution fulfils these requirements.

To insulate roof between Steico joist rafters 36 cm wood fibre insulation is applied. The coefficient of heat transmission equals to U_c = 0.10 [W/m^2·K] was achieved and conditions were fulfilled.

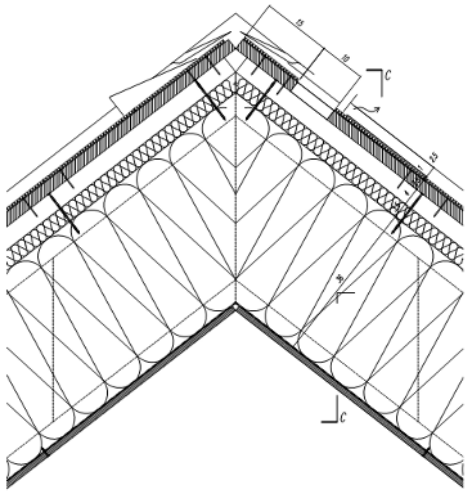

Figure 23. Architecture detail of ridge – cross section [1].

3.3 Woodwork

The triple glazed insulated windows with gas filled spaces and low emissivity (low-E) coatings fulfilling criteria U < 0.9 [W/m^2·K] were applied. The tight timber construction allowed to minimize losses caused by the ventilation.

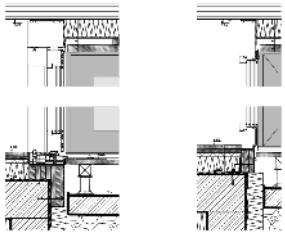

Figure 24. Architecture detail of woodwork construction – cross section [1].

3.4 Installations

The mechanical ventilation was applied in the building. The efficiency of heat recovery is minimum 85%. The ventilation includes recuperator with counter-flow heat exchanger. For heating and cooling the building air-source heat pump was recommended.

In order to reduce use of electricity to about 80% designed photovoltaic installation at every building with power ~10kW were applied. The installation is connected to energy network to balance electricity production and demand. Photovoltaic installation reduces CO_2 emission and provides energy safety and autonomy.

According to WT 2014 the analyzed building fulfils EP criteria with EP equalling to 24 kWh/(m^2·year), where

standards for low energy building is less or equal 40 kWh/(m^2·year). In energetical characteristic checked criteria on thermal insulation of external barriers, condition of windows area and condensation.

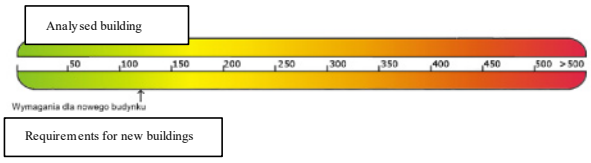

Figure 25. Heating and energy demand ratio per year qualify analysed building as a low energy [9].

4 Sustainable and green building

Due to natural character of the elements no hazardous or any chemical substances are used. Natural construction of the ceiling and the walls positively affects permeability of air humidity due to phenomenon of construction breathing. The solid construction gives the building considerable heat storage larger than timber skeletal building filled with insulation. The buildings have high retention capacity. Consequently, during night time when temperature is lower than during day time buildings keep the temperature and the buildings do not need to be heated. Comparing brick with solid timber one can say that time in which a square metre of wall of bricks cools down by 1°K, is up to four times shorter than a timber.

Due to the fact, that all elements used in the buildings are prefabricated, the construction is very fast. It may takes approximately 3 days and is shorter than in case of standard buildings.

Figure 26. Prefabricated wall elements [8].

During construction of the building, the amount of waste is reduced to minimum. Waste from timber elements can be reused to create smaller elements or as a biomass fuel. The examination performed by German scientist proved that the elements in PHE and MHM systems shield off high-frequency waves effectively due to their large mass. The structure creates a zone which neutralizes signals from mobile phones.

5 Summary

In the investment process related to the implementation of MHE and PHE systems close collaboration between the architect, the structural engineer and the contractor was important. Many problems were solved during the coordination meetings. The designers created an interesting project which fulfils low energy criteria. The applied materials and the construction system make the investment sustainable and environment friendly. The pre-planned solutions in distribution installations eliminated later changes and allow to reduce waste. The analyzed investment is a significant example of modern technology in erecting buildings. It will allow an introduction of a synergy between the economical and environmental aspects, allowing for affordable housing that is cost effective and comfortable for living.

References

1. P. Natkaniec, P. Bieroński, M. Faber,Natkaniec Olechnicki Architekci, Architectural design, Cracow, 2015
2. M. Hodurek, Cz. Hodurek, Pracownia Inżynierska Czesław Hodurek, Structural design, 2015
3. European Technical Approval ETA-13/0799
4. PN-EN 12831 Heating systems in buildings
5. PN-EN 1995-1-1: Design of timber structures. Part 1.1: General rules and rules for buildings
6. [online] www.massivholzmauer.de, 14 May 2016
7. [online] www.steico.com, 14 May 2016
8. [online] www.dreamarthome.pl, 14 May 2016
9. P. Kliński, G. Piskorz, Termo Studio s.c., Energy consumption characteristic, Poznan, 2015