Analytical substantiation of the parameters of the directional air-hydraulic hood

Ulugmurad Jonkobilov[1*], *Sobir* Jonkobilov[2], *Ulugbek* Rajabov[1], *Toshburi* Egamnazarov[3], and *Shuhrat* Xo'shiyev[4]

[1] Karshi Engineering-Economic Institute, Karshi, Uzbekistan
[2]Tashkent Institute of Irrigation and Agricultural Mechanization Engineers, Tashkent, Uzbekistan
[3]Reclamation Expedition of the Amu-Kashkadarya Basin Administration of Irrigation Systems, Karshi, Uzbekistan
[4]Karshi branch Tashkent institute of irrigation and agricultural mechanization engineers, Karshi, Uzbekistan

Abstract. The article is about to the calculation of the main technical parameters of the directional air-hydraulic hood. It is accepted as a mathematical model of wave equations of hyperbolic type as applied to pressure pipelines of pumping stations, and analytical solutions of wave equations for different values of the polytropic exponents are proposed. Water hammer poses a danger to the normal operation of the main equipment of stations, control and measuring equipment, control devices and pressure pipelines. To damp the intensity of water hammer in the pressure pipelines of pumping stations, we have accepted an effective design of an air-hydraulic cap. When establishing the strength indicators of pressure pipelines against hydraulic shock, it is necessary to make an accurate calculation of the main parameters of the proposed design of the air - hydraulic cap. The article presents the results of analytical and experimental studies of the accepted cap design. At the same time, an analytical method is proposed for calculating the basic dimensions of the cap. The results of the proposed calculation procedure are in good corresponding with the experimental data. This confirms the reliability of the proposed analytical calculation method.

1 Introduction

To protect pressure pipeline systems from the impact of hydraulic shock, various dampers are used, in particular, *air-hydraulic caps (AHC)* [1-21].

In the work of N. E. Zhukovsky [1], a method for calculating the *hydraulic shock (HSh)* in the presence of an AHC installed on the pipeline was proposed. At the same time, the author offers an approximate formula for determining the volume of air in the AHC and accepts the adiabatic law of compression and expansion of air in the AHC, since, according to the author, the HSh process is fast-flowing [1].

* Corresponding author: ulugmurad@inbox.ru

I.A. Charny [2] uses the linearized HSh equations to calculate the AHC. In this case, the author accepts the isothermal law (n = 1.0) for the compression and expansion of air in the AHC.

In practice, the calculation method proposed by Evangelisti [3] is the most widely used. This method is based on the application of special graphs compiled by Evangelisti due to the approximate integration of the wave differential equations of hydraulic shock by the finite difference method.

The disadvantage of these graphs is the limited range of changes in the initial parameters, and therefore, in many cases, the Evangelisti method is not applicable.

In V. S. Dikarevsky's work [4], he tried to eliminate the drawback of the G. Evangelisti method, constructed diagrams $\overline{Z}_{\max} = f\left(\varepsilon, \overline{h}_{mpo}\right)$ and $\overline{Z}_{\min} = f\left(\sigma, \overline{h}_{mpo}\right)$ for the isothermal law (n = 1.0) in a wide range of changes in the parameters σ and $\overline{h}_{mpo}$. However, the author admits inaccuracies in solving the basic equations

F.M.Darson and A. A. Kaliske [5] presented an analytical method for determining the size of the cap located at the end of the pressure line in front of the gate valve. At the same time, the author accepted the isothermal law (n = 1.0) change in the volume of gas in the AHC and does not consider the effect of pressure losses on friction in the pressure pipeline. This method of calculating the cap is also approximate.

In the work of B. F. Lyamaeva [6], a method for calculating the AHC on a computer is developed. The proposed method is based on the joint solution of the equations of HSh, continuity at the junction of the cap to the pipeline, and the state of the gas in the AHC. The calculation is made by the author using the iteration method.

In the work of D.A.Fox [7], a numerical method for calculating the AHC is given. The author applies the method of characteristics with a regular rectangular grid with constant steps Δ*x* and Δ*t*. The author solves the equations of continuity, the state of air (gas) and the equations of relations on the characteristics. The calculations are implemented on a computer. The author [7] suggests taking the polytrope coefficient value equal to n = 1,20 and considering the head loss along the length according to the quasi-stationarity hypothesis.

To extinguish the hydraulic shock that occurs in pressure pipelines, along with other shock dampers, a directional air-hydraulic cap (AHC) is used (Figure 1); the size of the cap is determined by the conditions for starting and stopping pumps [2-9].

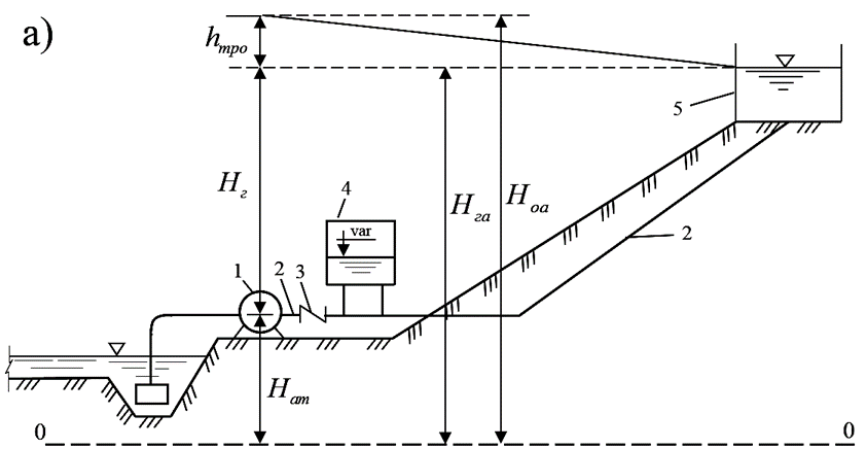

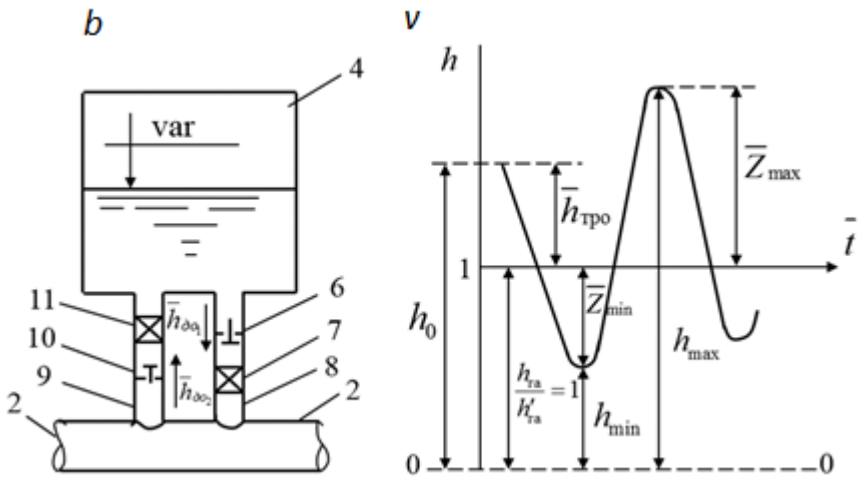

Fig. 1. Design scheme (a); directional VGK – (b); graph h = h(t) – (c): 1 is pumping unit; 2 is pressure line; 3 is check valve; 4 is directional AHC; 5 is water intake; 6 and 10 are check valves; 7 and 11 is damping resistance; 8 and 9 are connecting pipelines.

In this paper and Figure 1, the notation described earlier [9] is used in detail.

2 Methods

This paper illustrates a calculation method directed to the AHC installed at the beginning of the pressure pipeline (Figure 1).

When drawing up the method, it is assumed that the pump is switched off instantly, and the time of closing the check valve is zero [20-33].

To calculate the hydraulic shock in the system of the AHC -pipeline-reservoir, the following system of equations is used [4, 9]:

$$\left.\begin{aligned} \frac{d\bar{\vartheta}}{d\bar{t}} &= \frac{2\pi}{\sqrt{2\pi\cdot\sigma}}\cdot\left[h-1-\left(\bar{h}_{mp}+\bar{h}_{\partial}\right)\cdot\bar{\vartheta}\left|\bar{\vartheta}\right|\right] \\ \frac{dh}{dt} &= -2\cdot n\cdot h^{\frac{1+n}{n}}\cdot\pi\cdot\sqrt{\frac{2\cdot\sigma}{n}}\cdot\bar{\vartheta} \end{aligned}\right\} \quad (1)$$

The system of equations (1) is solved under the following initial conditions:

$$\left.\begin{aligned} h_0 &= 1+\bar{h}_{mpo} \\ \bar{\vartheta}_0 &= 1 \end{aligned}\right\} \text{ at } \bar{t}=0. \quad (2)$$

3 Results and Discussion

To determine H_{amin} and H_{amax} in a pressure system with a directed AHC, the following dependencies are obtained as a result of the analytical solution of the system of equations.
To determine H_{amin}

a) at $n \neq 1$

$$\left\{e^{\zeta_0}\left(\frac{m_1\sigma+1}{m_1\sigma}-\frac{m_1^{n-1}}{\sigma}\right)\left[\frac{\zeta_0^{1-n}}{(1-n)}+\sum_1^N\frac{\zeta^{(N+1-n)}}{(N+1-n)N!}+\ldots\right]\right\}=$$
$$=\left\{\frac{e^{\zeta_m}}{m_1\sigma}-\frac{m_1^{n-1}}{\sigma}\left[\frac{\zeta_m^{1-n}}{(1-n)}+\sum_1^N\frac{\zeta_m^{(N+1-n)}}{(N+1-n)N!}+\ldots\right]\right\} \quad (3)$$

b) at $n = 1$

$$\left\{e^{\zeta_0}\left(\frac{m_1\sigma+1}{m_1\sigma}\right)-\frac{1}{\sigma}\left[\ln|\zeta_0|+\sum_1^N\frac{\zeta_0^N}{NN!}+\ldots\right]\right\}=\left\{\frac{e^{\zeta_m}}{m_1\sigma}-\frac{1}{\sigma}\left[\ln|\zeta_m|+\sum_1^N\frac{\zeta_m^N}{NN!}+\ldots\right]\right\} \quad (4)$$

where $\zeta_0=\dfrac{m_1}{h_0^{\frac{1}{n}}}$; $\zeta_m=\dfrac{m_1}{h_{\min}^{\frac{1}{n}}}$; $m_1=\dfrac{\bar{h}_{mpo}+\bar{h}_{\partial o1}}{\sigma}$ (5)

$\bar{h}_{\partial o1}$ - h are dimensionless pressure losses in the pipeline 8 with a damping resistance 7 (see Fig. 1, б) at a speed of $\bar{\vartheta}=1$; (see Figure 1, c).
To determine H_{amax}

a) at $n \neq 1$

$$\left\{m_2\left[\frac{\zeta_{m_1}^{(1-n)}}{(1-n)}+\sum_1^N(-1)^N\frac{\zeta_{m_1}^{(N-1-n)}}{(N+1-n)N!}+\ldots\right]+e^{-\zeta_m}\right\}=$$
$$=\left\{m_2\left[\frac{\zeta_{\max}^{(1-n)}}{(1-n)}+\sum_1^N(-1)^N\frac{\zeta_{\max}^{(N+1-n)}}{(N+1-n)N!}+\ldots\right]+e^{-\zeta_{\max}}\right\} \quad (6)$$

b) at $n = 1$

$$\left\{m_2\left[\ln|\zeta_{m_1}|+\sum_1^N(-1)^N\frac{\zeta_{m_1}^N}{NN!}+\ldots\right]+e^{-\zeta_m}\right\}=$$
$$=\left\{m_2\left[\ln|\zeta_{\max}|+\sum_1^N(-1)^N\frac{\zeta_{\max}^N}{NN!}+\ldots\right]+e^{-\zeta_m}\right\}, \quad (7)$$

where $\zeta_{m_1}=\dfrac{m_2}{h_{\min}^{\frac{1}{n}}}$; $\zeta_{\max}=\dfrac{m_2}{h_{\max}^{\frac{1}{n}}}$; $m_2=\dfrac{\bar{h}_{mpo}+\bar{h}_{\partial o2}}{\sigma}$ (8)

$\bar{h}_{\partial o2}$ are dimensionless pressure losses in the pipeline 9 with a damping resistance 11 (see

Fig. 1, b) at a speed of $\overline{\vartheta} = 1$.

From equation (5) or (6), it is possible for known m1, σ, n and ζ_0 to determine the value of ζ_m by the iteration method, and then calculate

$$h_{\min} = \left(\frac{m_1}{\zeta_m}\right)^n \text{ and } H_{a\min} = h_{\min} H_{ga} \tag{9}$$

The problem of determining ζ_m, h_{min} and H_{amin} can be solved on a computer.

Along with the solution of the problem of determining ζ_m and h_{min}, the inverse problem of determining σ is also possible for the given h_0,h_{min}, $\overline{h}_{mpo}$, $\overline{h}_{\partial o1}$ and n. To solve this problem, you should substitute in equation (3) or (4)

$$\zeta_0 = \frac{m_1}{h_0^{\frac{1}{n}}} = \frac{\overline{h}_{mpo} + \overline{h}_{\partial o1}}{\sigma h_0^{\frac{1}{n}}} \text{ and } \zeta_m = \frac{\overline{h}_{mpo} + \overline{h}_{\partial o1}}{\sigma h_{\min}^{\frac{1}{n}}}$$

and using the method of successive approximations, determine the value of the parameter σ from this equation. For the found σ, the volume of air W_o in the hood is determined by the formula [4, 10]:

$$W_0 = \frac{\omega Z \vartheta_0^2}{2gH_{za}\sigma}. \tag{10}$$

The problem of determining σ and W_o can also be solved on a computer.

As a result of the analytical integration of the system of equations (1) under the initial conditions (2), approximate formulas for determining σ and W_o are obtained:

a) at n ≠ 1;

$$\sigma = \frac{\left(1 + 0.5\overline{h}^*_{mpo}\right)}{h_0^{\frac{1}{n}}}\left[\left(\frac{h_0}{h_{\min}}\right)^{\frac{1}{n}} - 1\right] + \frac{h_0^{\frac{n-1}{n}}}{(n-1)}\left[\left(\frac{h_{\min}}{h_0}\right)^{\frac{n-1}{n}} - 1\right]; \tag{11}$$

$$W_0 = \frac{\omega \cdot Z \cdot \vartheta_0}{2gH_{ga}\left\{\frac{\left(1 + 0.5h^*_{mpo_1}\right)}{h_0^{\frac{1}{n}}}\left[\left(\frac{h_0}{h_{\min}}\right)^{\frac{1}{n}} - 1\right] + \frac{h_0^{\frac{n-1}{n}}}{(n-1)}\left[\left(\frac{h_{\min}}{h_0}\right)^{\frac{n-1}{n}} - 1\right]\right\}} \tag{12}$$

b) at $n = 1$;

$$\sigma = \frac{\left(1 + 0.5h^*_{mpo}\right)}{h_0}\left[\left(\frac{h_0}{h_{\min}}\right) - 1\right] - \ln\left(\frac{h_0}{h_{\min}}\right) \tag{13}$$

$$W_0 = \frac{\omega \cdot Z \cdot \vartheta_0}{2gH_{ga}\left\{\frac{\left(1+0,5h^*_{mpo_1}\right)}{h_0}\left[\left(\frac{h_0}{h_{\min}}\right)^{\frac{1}{n}}-1\right]-\ln\left(\frac{h_0}{h_{\min}}\right)\right\}} \quad (14)$$

where $h^*_{mpo} = \bar{h}_{mpo} + \bar{h}_{\partial o}$ (15)

As a consequence of the numerical solution of the system of equations (1) on a computer, it is established that the approximate formula (13) can be used for preliminary calculations of the directed AHC in the following range of changes in the parameters σ, $\bar{h}_{\partial o1}$ and $\bar{h}_{mpo}$:

a) at $\bar{h}_{\partial o1} = 0$ and $n = 1$

$$0,25 \le \sigma \le 1; \quad 0 \le h_{mpo} < 1;$$

b) at $\bar{h}_{\partial o1} \ge 0$ and n = 1

$$0 \le \bar{h}_{\partial o1} \le 0,5; \quad 0,25 \le \sigma < 1; \quad 0 \le h_{mpo} \le 0,5.$$

It is also determined that the formula (11) can be applied to perform preliminary calculations of the directed AHC in the following range of changes in the parameters $\bar{h}_{\partial o1}$, σ and h_{mpo} :

a) at $\bar{h}_{\partial o1} = 0$ and $n = 1,2$

$$0.20 \le \sigma \le 1; \quad 0 \le \bar{h}_{mpo} \le 1;$$

c) at $h_{\partial o1} \ge 0$ and n = 1,2

$$0 \le \bar{h}_{\partial o1} \le 0,5; \quad 0,2 \le \sigma < 1; \quad 0 \le \bar{h}_{mpo} \le 0,5.$$

It should be mentioned that the use of approximate formulas (11) and (13) allows us to determine the volume of air in the AHC with a margin of 0...15 % [9]. From equation (6) or (7), for known σ, m_2, and h_{min}, the values of the quantity can be determined by the iteration method ζ_{max}, and then calculated

$$h_{\max} = \left(\frac{m_2}{\zeta_{\max}}\right)^n \text{ and } H_{a\,max}=h_{max}Hg_a. \quad (16)$$

The problem of determining ζ_{max}, h_{max} and H_{amax} can be solved on a computer. To verify the reliability of the above numerical calculations of the AHC with a diaphragm,

experimental studies were conducted. The results of the comparison of the calculated formulas (11) and (13) and the experimental data [9] for the study of directed AHC are shown in Fig.2.

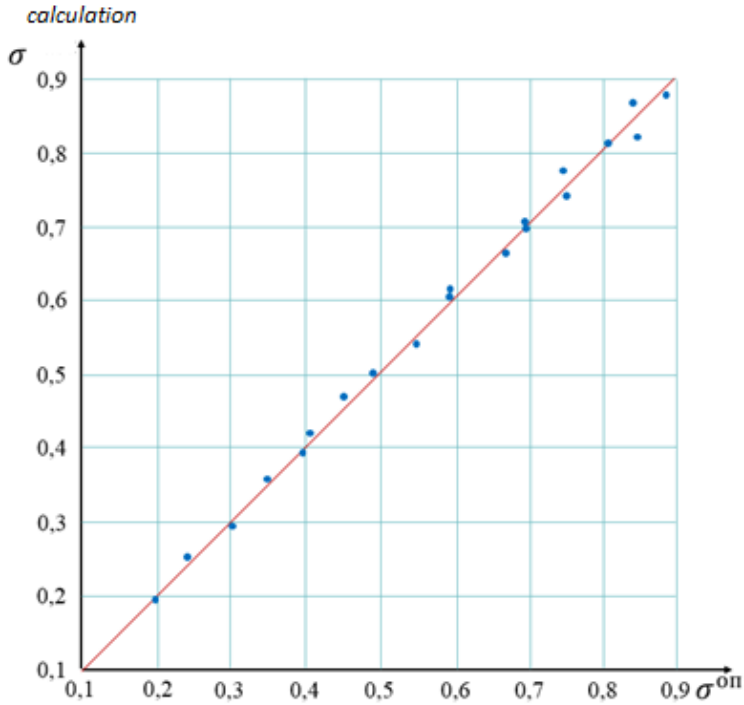

Fig. 2. Comparison of the results of analytical calculations using formulas (13) and (15) of directed AHC with experimental data [9].

4 Conclusions

The analysis of literature sources presents that in the event of a sudden power outage in the pressure pipelines of irrigation pumping stations, a dangerous non-stationary process occurs, a special case of which is the HSh. To prevent this phenomenon, it is very important to develop a new method for calculating the optimal size of the HSh - directed AHC extinguisher.

To optimally dampen the intensity of HSh in the pressure system of pumping stations, it is imperative to take into account changes in the local resistance in the diaphragm of the connecting pipes and the law of expansion and compression of air in the proposed design of the hood. These factors must be considered when integrating the wave differential equations of the shock wave by the finite difference method to determine the optimal dimensions of the proposed cap design.

As a result of the analytical solution of the wave differential equations of the HSh, the dependences for calculating the economic parameters of the proposed design of the HSh extinguisher are offered.

The reliability of the proposed formulas (11) and (13) is proved by comparing the calculated values of σ^{calc} and with the experimental values of σ^{OP} [9].

Acknowledgement

This article is based on the contract work on the topic "Improvement of hydraulic methods for calculating pressure pipelines of pumping stations (№ G and GI/ 40-20)"

References

1. Zhukovsky N.E. About water hammer in water pipes, p.104, Moscow, (1949)
2. Charny I.A. Unsteady motion of a real liquid in pipes, p.296, Nedra, (1975)
3. Evangelisti G. Jl colpo d'aviete nelle condotte elevatorie munite di camera d'avia. – L'Energia, Elektrica, № 9, pp.600-615, Milano, (1938)
4. Dikarevsky V.S. Water conduits. Monograph. Proceedings of RAASN. Construction sciences, vol. 3, p.200, Moscow: RAASN, (1997)
5. Darson F.M., Kalinske A.A. Methods of calculating Water – hammer, pressures. – Journal of the AWWA, v.31, № 11, pp.1835-1864, (1939)
6. Lyamaev BF, Nelyubov GP, Nebolsin VA Stationary and transitional processes in complex hydraulic systems. - L .: Mechanical engineering, - p.192, (1978)
7. Fox D.A. Hydraulic analysis of unsteady in pipelines. - M .: Energoizdat, - p.247, (1981)
8. Bergeron L. From water hammer in pipes to discharge in the electrical network. General graphical calculation method (translation from french). –M., Mashgiz, - p.348, (1962)
9. Zhonkobilov U.U. Formulas for calculating air-hydraulic hoods of "directional" action Energy va resource tezhash muammolari magazine, No. 4, pp. 143-146, Tashkent, (2018)
10. Jonkobilov U., Jonkobilov S., Rajabov U., Bekjonov R., Norchayev, A. Shock wave velocity in two-phase pressure flow. IOP Conference Series: Materials Science and Engineering. 2021. 1030. Pp. 012129. DOI:10.1088/1757-899X/1030/1/012129.
11. Arifjanov A., Jonqobilov U., Jonqobilov S., Khushiev Sh., and Xusanova J. The influence of hydraulic friction on the maximium pressure of water hammer. IOP Conf. Series: Earth and Environmental Science. 2020. 614. Pp. 012092. DOI:10.1088/1755-1315/614/1/012092.
12. Nikolav Nikola. Water hammer at pumping stations with an air reservoir. - Hydraulic engineering and melioration, v. 15, No. 7, pp. 10-16, Sofia, (1970)
13. Hoffman D. Dempfung von Flussigkeitsschwinggungen in Hudraulikleitungen. – Ölhudraulik and Pnevmatik – Wiesbaden, bd. 24, № 2, pp.102-105, (1980)
14. Ludewig D. Beiträge zur Дruckstoβsicherung von Pumpanlagen. – Mitteilungen des Institut für Wasserwirtschaft. Herausgegeben von Institut für Wasserwirtschaft. Heft 25, p.183, Berlin, (1966)
15. Al-Khomairi A.M., Plastic water hammer damper, Aust. J. Civ. Eng. 8 (1) (2010) 73–81.
16. Boulos P.F., Karney B.W., Wood D.J., Lingireddy S., Hydraulic transient guidelines for protecting water distribution systems, Am. Water Works Assoc. 97 (5), pp. 111–124, (2005)
17. Kim S.G., Lee K.B., Kim K.Y., Water hammer in the pump-rising pipeline system with an air chamber, J. Hydrodyn. Ser. B 26 (6) pp. 960–964, (2015)
18. Marian N., Model of the water-hammer effect considering a spring safety valve, Arch. Hydro-Eng. Environ. Mech. 51 (1) pp.25-40, (2004)
19. Moghaddas S., The steady-transient optimization of water transmission pipelines with consideration of water-hammer control devices: a case study, J. Water Supply Res. Technol. - Aqua 67 (6), pp.556–565, (2018)

20. Stephenson D. Simple guide for design of air vessels for water hammer protection of pumping lines [J]. Journal of Hydraulic Engineering, ASCE, (2002), 128(8), pp.792-797.
21. Kim S. Impulse response method for pipeline systems equipped with water hammer protection devices [J]. Journal of Hydraulic Engineering, ASCE, 134(7), pp. 961-969, (2008)
22. Bazarov D., Vatin N., Obidov B., and Vokhidov O. Hydrodynamic effects of the flow on the slab of the stand in the presence of cavitation. IOP Conf. Ser. Mater. Sci. Eng. 1030, 012110 (2021).
23. Bazarov D., Markova I., Norkulov B. and Vokhidov O. Hydraulic aspects of the layout of head structures during water intake from lowland rivers. IOP Conf. Ser. Mater. Sci. Eng. 1015, 012041 (2021).
24. Bazarov D., Markova I., Sultanov S. and Kattakulov F. Dynamics of the hydraulic and alluvial regime of the lower reaches of the Amudarya after the commissioning of the Takhiatash and Tuyamuyun hydrosystems. IOP Conf. Ser. Mater. Sci. Eng. 1030, 012110 (2021).
25. Krutov A., Choriev R., Norkulov B., Mavlyanova D. and Shomurodov A. Mathematical modelling of bottom deformations in the kinematic wave approximation. IOP Conf. Ser. Mater. Sci. Eng. 1030, 012147 (2021).
26. Krutov A., Norkulov B., Uljaev F., and Jamalov F. Results of a numerical study of currents in the vicinity of a damless water intake. IOP Conf. Ser. Mater. Sci. Eng. 1030, 012121 (2021).
27. Krutov A., Norkulov B., Mavlyanova D. Simulation of spreading of non-conservative passive substances in water bodies. IOP Conf. Ser. Mater. Sci. Eng. 883(1), 012028 (2020)
28. Krutov A., Norkulov B., Nurmatov P., Mirzaev M. Applicability of zero-dimensional equations to forecast nonconservative components concentration in water bodies. IOP Conf. Ser. Mater. Sci. Eng. 883(1), 012028 (2020)
29. Krutov A., Norkulov B., Artikbekova F., Nurmatov P. Optimal location of an intake at a reservoir prone to salt diffusion. IOP Conf. Ser. Mater. Sci. Eng. 869(7), 072020, (2020)
30. Shokirov B., Norkulov B., Nishanbaev Kh., Khurazbaev M., Nazarov B. Computer simulation of channel processes. E3S Web of Conferences, 97, 05012, (2019)
31. Shomayramov, M., Norkulov B., Rakhmanov J., Tadjiyeva D., Suyunov J. Experimental researches of hydraulic vacuum breakdown devices of siphon outlets of pumping stations. E3S Web of Conferences, 97, 05009, (2019)
32. Bazarov D. and Vokhidov O. Extinguishing Excess Flow Energy in Spillway Structures. In book: Proceedings of EECE 2020, LNCE 150, pp. 535-545, (2021) DOI: 10.1007/978-3-030-72404-7_52
33. Bazarov D., Markova I., Norkulov B., Isabaev K., Sapaeva M. Operational efficiency of water damless intake. IOP Conf. Ser. Mater. Sci. Eng. 869(7), 072051, (2020)