Experience of strengthening the soil base with parallel lifting of the foundation structure

Dmitrij Rachkov[1*], *Denis* Volosyuk[1], *Yakov* Pronozin[1], and *Leonid* Bartolomej[1]

[1]Tyumen Industrial University, 625000 Tyumen, Russia

Abstract. The article shows the positive experience of fixing the soil base and strengthening the foundation with the parallel restoration of the normative state of the underground and above-ground structures of the facility. The accidents at the considered objects is caused by the formation of significant voids under the foundation. Foundations at the objects are represented by monolithic reinforced concrete slab and strip. Recommendations are given on the development of design solutions, organization of work, and the compositions of injection mortars are analyzed. Injection compositions were presented on the basis of cement and sand-cement mixture, the argumentation of the use of these compositions on specific engineering-geological conditions is given. Stabilization of the foundation was additionally made by strengthening with "Atlant" piles. The variants of the object geometric position correction by mortar injection into the contact layer and into the active soil strata are presented. The development of a reliable solution for reinforcement is possible only if there are an accurate data of the geotechnical conditions of the construction site, a detailed visual and instrumental survey of building structures. The processes of fixing soil foundations with parallel lifting of underground and above-ground structures are provided today with the necessary level of equipment development. However, it is necessary to ensure its technologically correct use, adapted to a specific situation. The options for solving emergency situations considered in the article can be used as proven design solutions at facilities with similar engineering and geological conditions and foundation structures.

1 Introduction

Arrangement of artificial foundations by backfilling territories is often associated with significant financial and labor costs. In turn, many cases are known in construction practice, as a result of which emergency situations were observed at construction sites during the installation of artificial foundations of this type [1]. The main factors leading to these consequences are the wrong choice of material for backfilling, as well as violation of the technology of work [2, 3]. As examples of incorrect selection of material for backfilling, there are cases of using subsidence soils prone to significant compaction under load, technogenic soils with a heterogeneous composition, etc. Violations in the course of work

* Corresponding author: rachkov1991@yandex.ru

are often undercompaction of the soil to design values, work in the winter period using soil with ice inclusions, etc.

Emergencies in construction on artificial foundations manifest themselves in the form of uneven or excess settlements of foundations or their individual parts, which leads to the development of defects in above-ground structures [4]. Often, problems at such facilities appear during the period exploitation.

This article discusses the case of eliminating excessive settlement of foundations on artificial bases by strengthening them and aligning the geometric position of the structures.

The first object is a one-story building of an operator petrol station. The building is rectangular in plan with dimensions in the axes of 12.5 x 8.0 m, the walls are made of a metal frame filled with expanded clay blocks and insulated with mineral wool boards; the single-pitched roof is made of profiled sheet; the foundation is in the form of a monolithic reinforced concrete slab 300 mm thick.

Fig. 1. General view of object No. 1.

According to the results of the survey at this object, an excess of the allowable standard values of the relative difference, as well as of the maximum settlement were established.

The main reason for the emergence of excess non-uniform settlement of the foundation slab of the object was uneven additional compaction in time, significant in depth, heterogeneous in physical and mechanical properties of bulk soils, which is confirmed by the presence of a significant number of different, randomly located voids between the foundation slab and the base [5]. Uneven settlement, reaching 98 mm, which made it difficult to operate the building, caused the formation of cracks in the walls and the development of a tilt of the supporting metal frame.

Under the slab, cavities were found between the bottom of the slab structure and the top of the soil base, 30 - 100 mm in size. This fact indicates that the foundation transfers the load from the building to the base unevenly. According to the results of the examination of the foundations, obtained on the basis of soundings and prospect holes, the overall quality of work on the arrangement of the slab of the Object can be described as satisfactory. At the

same time, the design thickness of the foundation slab is also not observed, the recorded values vary from 180 to 250 mm.

To assess the distribution of internal stresses in the frame elements of the object, a numerical simulation of the deformed frame system was carried out. As a result of modeling, critical zones were identified in the key elements, requiring either strengthening of above-ground structures or bringing the building to its design position.

The second example is an industrial object, and in particular, a section of crane tracks at a large enterprise in the region (Fig. 2). In view of the construction of an artificial base made of subsiding soil, as well as the presence of an unstabilized natural clayey ground base, the crane track section had an excess settlement of up to 90 mm, which led to a stop of the bridge crane.

The foundation structure at this object is represented by a single monolithic slab with a thickness of about 300 mm, separated by temperature-shrinkage joints and located throughout the container site. The rails of the crane equipment are located on monolithic reinforced concrete beams.

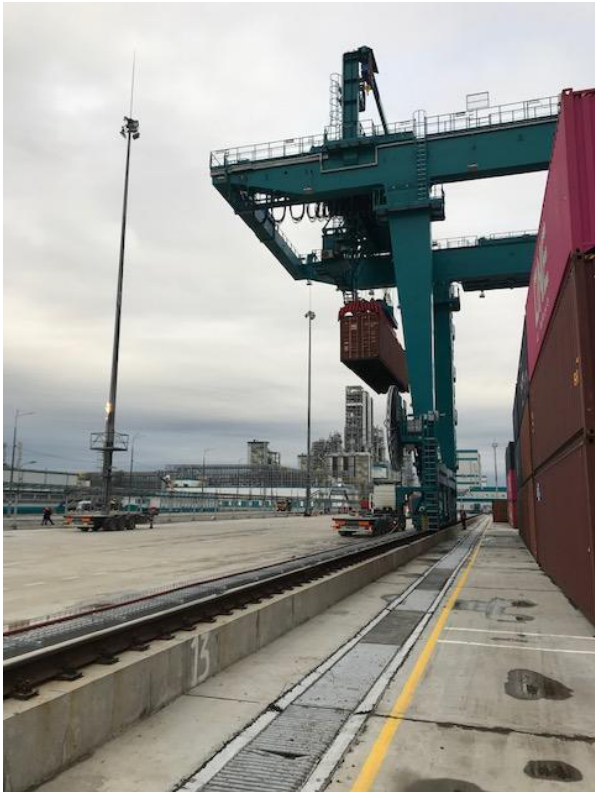

Fig. 2. General view of Object No. 2.

The maximum displacement between adjacent foundation beams was about 80 mm, which exceeded the allowable values by 5 times.

Fig. 3 Displacement of the foundation beams of the crane tracks at object No. 2. Maximum offset value was approximately 80 mm

2 Methods

The choice of technology to eliminate the emergency at the construction sites described above was supposed to provide a simultaneous solution of two problems: stabilization of base deformations, as well as correcting the geometric position of foundations, and, as a result, above-ground structures [6].

At object No. 1, at the first stage of work, in order to ensure the geometrically correct position of building structures and eliminate existing gaps in the “base – foundation” contact zone, injection was performed into this zone [7]. To prevent the exit of the mortar, metal profiled sheets were installed along the perimeter of the foundation slab (Fig. 4).

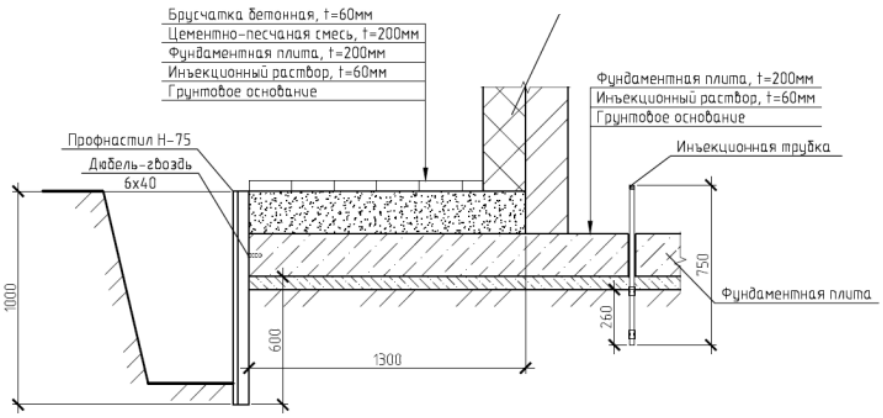

Fig. 4 Scheme of the arrangement of elements when restoring the “foundation – base” contact layer.

In order to ensure a controlled lifting of the foundation, injection pipes were installed throughout the slab with a longitudinal and transverse step of about 2.5 m. The injection of the mortar was carried out in zones, with a different volume of the injection mortar in each zone. Control over building structures was ensured by conducting constant geodetic monitoring of the heads of the bearing columns (Fig. 5).

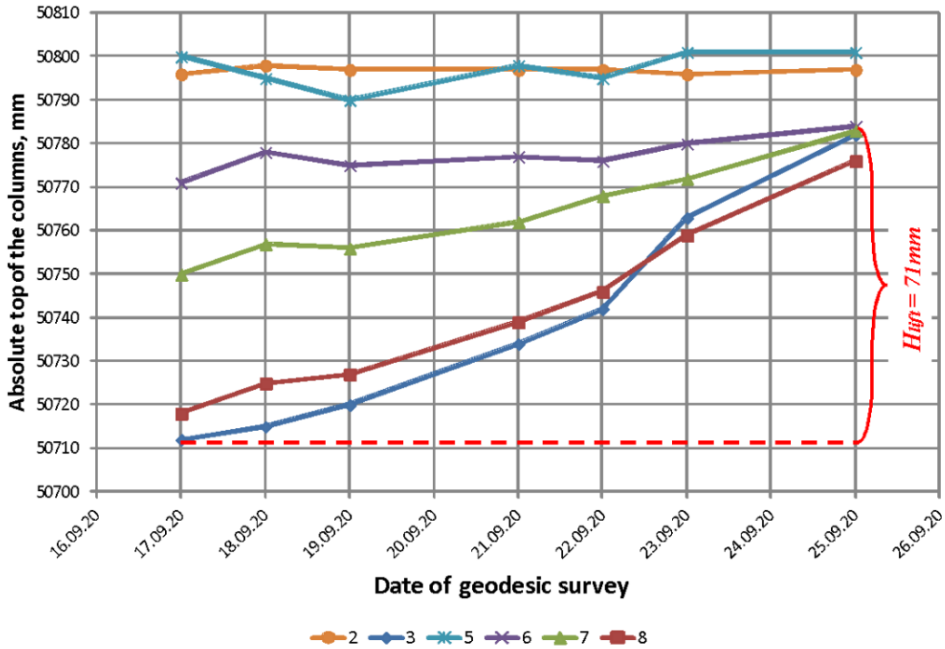

Fig. 5. The results of geodesic monitoring of the height marks of the tops of the columns at Object No. 1.

As a result of the first stage of work to correct the geometric position of building structures, it was possible to ensure a maximum rise of about 120 mm (Fig. 6), which made it possible to bring the value of the uneven settlement of foundation points to the standard values for this type of structure [8-10].

At the second stage of work, it was necessary to fix the geometric position of the object. Due to the excess of the unstabilized soil base layer over the compressible thickness under the slab foundation, it was decided to make piles of the Atlant type to transfer the load to a naturally stronger base located below. This solution made it possible to fix the geometric position of the object.

Fig. 6 Raising the foundation slab at Object No. 1

The lifting of the foundation structure of the crane tracks at object No. 2 was carried out by injecting the soil with cement mortar through pre-installed injectors, the length of which ensured the strengthening of the soil massif of the active zone of the base (Fig. 7). The rise of the foundation was ensured by the creation of lenses from the cement mortar in the hydraulic fracturing mode in the soil mass composed of silty-clayey soils of soft-plastic consistency.

The injectors were staggered along the foundation beam on both sides. Directional injection made it possible to form a local reinforcement of a stabilized zone of the soil mass directly under the crane track structure. Fixation was carried out according to the levels of placement of injection holes from the bottom up. The controlled parameters were the pressure in the system and the flow rate of the mortar.

Controlled lifting was carried out due to the staged pumping of the base, as well as constant (at least twice per shift) geodesic control over the structures of the crane tracks. Technological breaks between the stages had duration of about 24 hours.

This technology made it possible to reduce the maximum vertical displacement of the foundation beams from 10-80 mm to 5 mm with the removal of the upper horizontal plane of the foundations to the horizontal “zero” mark. Further leveling of the crane tracks was carried out by laying metal plates under the rail.

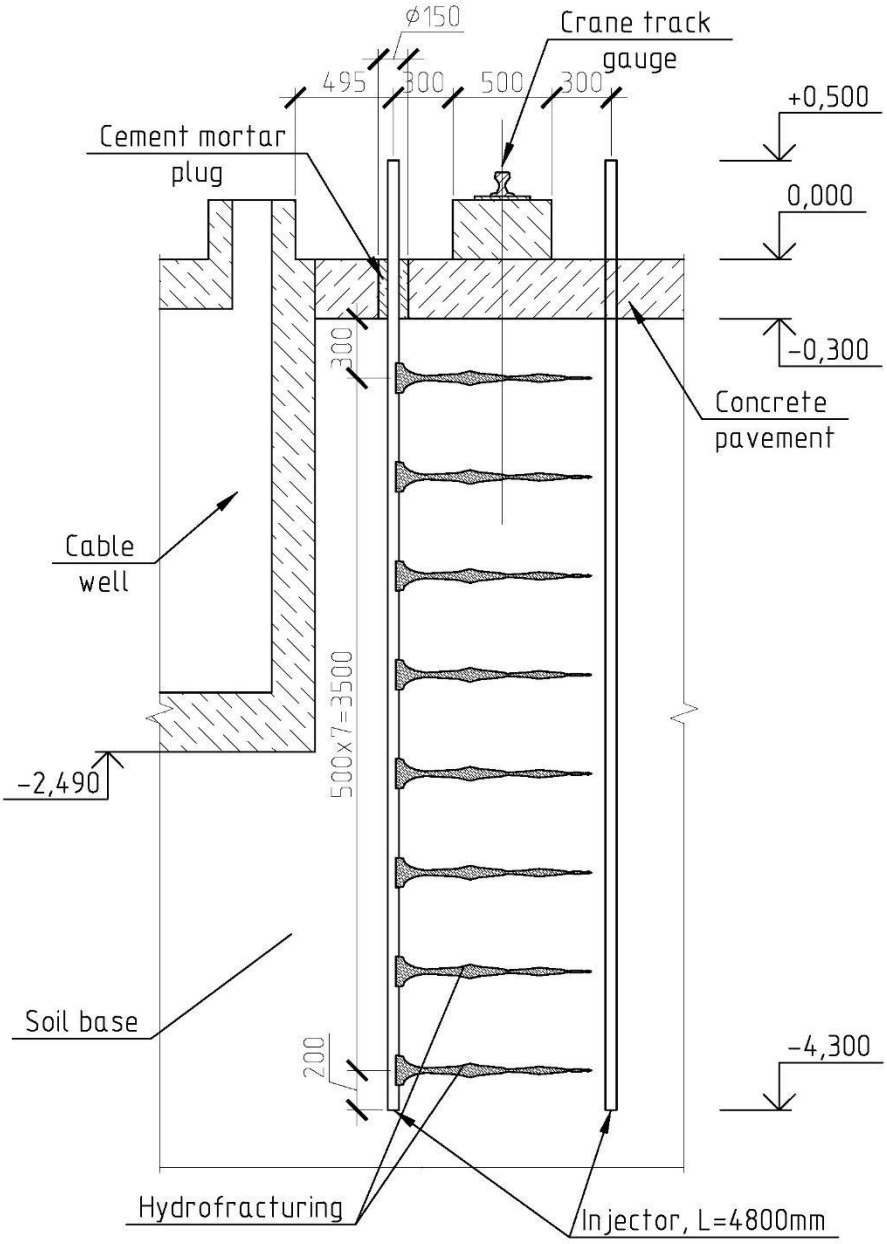

Fig. 7 Design solution for strengthening the base of the crane tracks at object No. 2

3 Selection of Injection Mortar

The choice of injection mortars is a discussed topic in the geotechnical community. The composition of the mortar for grouting or the installation of bored piles is determined by:

- engineering and geological conditions of the site;

- degree of groundwater aggressiveness;
- technology and equipment for amplification, etc.

In particular, on the objects considered in the article with similar initial tasks (fixing the base and lifting structures), similar engineering and geological conditions (dusty-clayey soils of soft-plastic consistency), it was decided to use different mortars.

At object No. 1, to ensure the filling of the gap between the foundation slab and the soil base and the subsequent installation of Atlant piles, an injection mortar based on sand cement (with a cement content of up to 67%) was used. This mortar is thicker in comparison with the cement mortar and allows creating a denser and more durable pile body, including increasing the thickness of the foundation slab. Also, a mortar based on sand cement is more cost-effective in case of equal injection volumes.

The use of an injection mortar based on sand cement at object No. 2 was unacceptable due to the task of fixing the clay soil in the hydraulic fracturing mode. For these purposes, the mortar has to have greater permeability, which is ensured by the use of a cement mortar.

To accelerate the hardening of the mortar in the soil and improve its manufacturability at the stage of its preparation, the additive MC-POWERFLOW 3100 was used, which made it possible to increase the strength of the mortar and the rate of gaining the strength. It has been proven that this additive can be used for injection mortars both based on cement and sand cement.

4 Results

Analyzing the experience of strengthening the foundation with a parallel solution to the issue of restoring the normative position of building structures (eliminating uneven settlements and subsidence of the foundation), it can be noted that:

- The development of a reliable solution for reinforcement is possible only if there is a complete picture of the engineering and geological conditions of the site, a detailed visual and instrumental survey of building structures.
- To determine the dynamics of the development of negative processes, it is recommended to ensure the implementation of continuous geodesic monitoring.
- The choice of technology and stages of work on fixing and lifting structures should be based on the data of engineering and geological surveys.
- The choice of the composition of the injection mortar should be justified by the characteristics of the soil massif and the method of strengthening. It is also worth evaluating the cost of the mortar with equal final characteristics.
- The ability to lift objects is often limited by the technical characteristics of the injection equipment, in particular, the maximum mortar supply pressure. At the same time, for each object, the choice of the correct technology for the production of works plays the decisive role.

5 Conclusions

Possible errors in the design or construction of industrial and civil facilities lead to non-standard tasks for a geotechnical engineer. Each such design solution will be unique in view of the difference in soil conditions and the design of construction objects, and will require a high degree of qualification and knowledge from the designer. The processes of fixing soil foundations with parallel lifting of underground and above-ground structures are provided today with the necessary level of equipment development. However, it is necessary to ensure its technologically correct use, adapted to a specific situation. The options for solving

emergency situations considered in the article can be used as proven design solutions at facilities with similar engineering and geological conditions and foundation structures.

References

1. A. Zhussupbekov, Lecture Notes in Civil Engineering **112** (2021) https://doi.org/10.1007/978-981-15-9399-4_9
2. Y. A. Pronozin, IOP Conference Series: Materials Science and Engineering **481 (1)** (2019) https://doi.org/10.1088/1757-899X/481/1/012013
3. Y. A. Pronozin, E.P. Bragar *Changes in soil properties at unloading of base of deep foundation pit*, in Proceedings of the International Conference on Geotechnics Fundamentals and Applications in Construction: New Materials, Structures, Technologies and Calculations, GFAC (2019) https://doi.org/10.1201/9780429058882
4. V. A. Khomyakov, Soil Mechanics and Foundation Engineering **54 (5)** (2017) https://doi.org/10.1007/s11204-017-9477-x
5. R. A. Mangushev, N.S. Nikiforova, Technological settlements of buildings in underground development influence zone (ASV, Moscow, 2017)
6. A. N. Gaido, V.V. Verstov, A.F. Yudina, Transportation Research Procedia **36** (2018) https://doi.org/10.1016/j.trpro.2018.12.089
7. M. A. Stepanov, IOP Conference Series: Materials Science and Engineering **463 (4)** (2018) https://doi.org/10.1088/1757-899X/463/4/042074
8. J. Golser, W. Steiner, Geomechanik und Tunnelbau **14 (1)** (2021) https://doi.org/10.1002/geot.202000047
9. M. Afifipour, Tunnelling and Underground Space Technology **26 (2)** (2011) https://doi.org/10.1016/j.tust.2010.11.006
10. Q. Jia, Rock and Soil Mechanics **30 (11)** (2009) https://doi.org/10.4028/www.scientific.net/AMR.163-167.3654