Emergency stop lane design on national road in West Sumatra (case study: Panorama 1 Sitinjau Lauik)

Hazmal Herman[1], *Bayu* Budi Irawan[1*], *Surya* Maiyora Wijayanti[1], and *Darwizal* Daoed[2]

[1]Civil Engineering Department, Faculty of Pharmacy, Sains and Technology, Universitas Dharma Andalas, Sawahan Street 103 A, Padang City, West Sumatra, Indonesia
[2]Civil Engineering Department, Faculty of Engineering, Universitas Andalas, Kampus Unand Limau Manih, Padang City, West Sumatra, Indonesia

Abstract. West Sumatra Province has geographical conditions consisting of lowlands and highlands. These geographical conditions certainly affect the geometric conditions of the road, especially on the Panorama 1 Sitinjau Lauik National Road Section. One of the factors that cause accidents is a vehicle that has failed brakes. This study aims to calculate the length of the emergency stop lane; plan the structure of the building; and plan a modeling design. The results of the Emergency Stop Route Design research showed that the overall dimensions were 240 m. Preliminary design results are as follows: Beam (600 mm width and 1100 mm height), Amount of flexural reinforcement: Compression reinforcement 8 D – 25 mm; Tensile reinforcement 4 D – 25 mm; Amount of shear reinforcement: Area of support 2Ø13-100 mm, Area of field 2Ø13-150 mm. Cross beam width 300 mm and height 600 mm. Amount of flexural reinforcement: compression reinforcement 3 D 16 mm; Tensile reinforcement 3 D 16 mm. Number of shear reinforcement: Support area 2Ø13-100 mm and field area 2Ø13-150 mm. For longitudinal reinforcement, the diameter is ø10 – 200 mm, the tie reinforcement has a diameter of ø10 – 200 mm and the vertical reinforcement has a diameter of ø16 – 150 mm.

1 Background

West Sumatra Province is located on the West Coast of Sumatra with geographical conditions consisting of lowlands and highlands or what is known as Bukit Barisan. These geographical conditions certainly affect the geometric conditions of the road, especially on the Panorama 1 Sitinjau Lauik National Road Section. The Sitinjau Lauik route is one of the access routes used to enter and exit Padang City, the capital of West Sumatra Province. The route that has a route, namely the City of Padang-Arosuka-Solok is an important route for the economy, especially for the people of Padang City and generally for the people of West Sumatra Province.

The area's topography is hilly with slopes with varying slopes, which makes the area prone to landslides and slippery, especially during the rainy season. In addition, on the Sitinjau Lauik access road, accidents often occur which are influenced by several factors such as brake failure [1-5], geometric (bends and sharp inclines/declines, drainage) [6], weather, and human factors [7]. The factors that cause accidents are divided into three groups, namely: road user (human) factors, vehicle factors, road and environmental factors [8, 9]. Human factors [10] as road users consist of:
a. Drivers, including drivers of non-motorized vehicles
b. Pedestrians, including hawkers, street vendors, and others.

The driver's behavior in the flow of traffic is a factor that determines the characteristics of the traffic that occurs. Increasing age or older people will have more accidents because driver reflexes become slower and certain physical abilities will decrease [11]. A traffic accident is an unexpected and unintentional event on the road involving a motorized vehicle with or without other road users which results in human casualties and/or property loss [12]. An accident is an event that is rare, random, involving many factors (multi-factor), preceded by a situation when one or more people make a mistake in anticipating environmental conditions [13]. The next finding was that the coefficient of friction on the road was very small, the road was so slippery that front-drive cars would slip and they would not have the strength to go up the hill. In 2020, 36 accidents occurred at the Sitinjau Lauik location where many curving vehicles had passed and there was an incline that needed to be traversed by users of the 45º curved road which made it impossible for two large vehicles to pass each other [14].

Based on the description above, it is necessary to carry out research on emergency stop lane planning as an effort to reduce the risk of accidents.

1.1 Objectives

The objectives of this research are as follows:

* Corresponding author: bay.unidha@gmail.com

a. Calculating the length of the emergency stop lane at the Panorama I Sitinjau Lauik
b. Planning the structure of the building on the emergency stop lane which includes beams, slabs, safety fences, and pillars.
c. Planning a modeling design for emergency stop lines at Sitinjau Lauik Panorama I.

1.2 Outcomes

The benefits of this research are:
a. Provide input for the construction of emergency stop lanes.
b. Providing security, safety, and comfort for road users.
c. Reducing the risk of accidents at the Sitinjau Lauik Panorama I location.

2 Methodology

In principle, this research process consists of planning analysis of the emergency stop lane at the Panorama I Sitinjau Lauik location, collection, and analysis of primary data (determination of the length of the emergency stop route, calculation of safe viewing distances, calculation of the length of the stopping platform, calculation of approach and guide lanes. Guidelines used the design of this emergency stop lane follows the Road and Bridge Sector [15].

Emergency Stop Lane Structure Planning consists of:
1. Preliminary Design of Beam
2. Preliminary Design of Plate
3. Preliminary Design of Column which includes: Loading and calculation of Pillar Dimensions
4. Safety Fence Design
5. Longitudinal Girder Beam Loading, Structural Analysis of Longitudinal Beams, Design Analysis of Flexural Reinforcement in Longitudinal Beams (Tensile), Design Analysis of Shear Reinforcement in Longitudinal Beams
6. Design Analysis of Flexural Reinforcement in Transverse Beams
7. Iron Analysis on Vehicle Floor Plates.

3 Result

3.1 Existing Conditions of Research Locations

The condition location of the Emergency Stop Lane (JPD), which is at the Panorama 1 viewpoint, has minimal land and uneven land area because it is located between a hill and a ravine, therefore accidents often occur in this location which results in roadblocks to vehicles passing through this route are from the Solok-Padang direction and the Padang-Solok direction. The location of this research is presented in Figure 1.

Fig. 1. Bend conditions of panorama 1 sitinjau lauik.

3.2 Emergency Stop Lane

a. Save Visibility (Jarak Pandang Aman-JPA)

JPA = 0,287 x VD x t (1)

= 0,287 x 50 x 145 Sec. (0,040 Hour)

= 0,574 Km

VD = 50 Km/hour (Least assumptions)

t = 145 Second = 0,040 Hour (road between 2 cities with 10,2 < t < 11,2 Second)

b. Length of Stop Lane

The length of the stopping pad is calculated based on the entry speed value, the type of material used for the stopping pad (slope equivalent value), and the slope to be used.

$$LH = \frac{Vm^2}{245\frac{(R \pm G)}{100}} \quad (2)$$

$$= \frac{60^2}{245\frac{(0,25 \pm 0,45)}{100}}$$

LH1 = -73,46 meter
LH2= + 20,99 meter
Using Assumptions $LH = 70\ meter$

c. Length of Approach and Leading Lanes

An approach lane is required before the stopping ramp in order for the out-of-control vehicle to safely enter the emergency stopping lane. The approach lane consists of two parts, namely the taper and the transition. The length of the taper is calculated based on the maximum angle of entry (5°) allowed to prevent overturning. The length of the taper section is regulated by the provisions:

VD ≤ 60 km/hour→ 60 meter
VD > 60 km/hour →100 meter

The length of the transition section is calculated by considering land availability using the following equation:

LS = LLAHAN – LH – LT (3)
= 200 -70-70 =60 m

LLahan = amount of available land = 200 meter (assumed)

Information:
LS = transition length
LLAHAN = available space
LH = stop base length
LT = taper length

3.3 Emergency Stop Lane Structure Planning

The following is presented in Figure 2 Results of the Dimensional Analysis of Emergency Stop Lane.

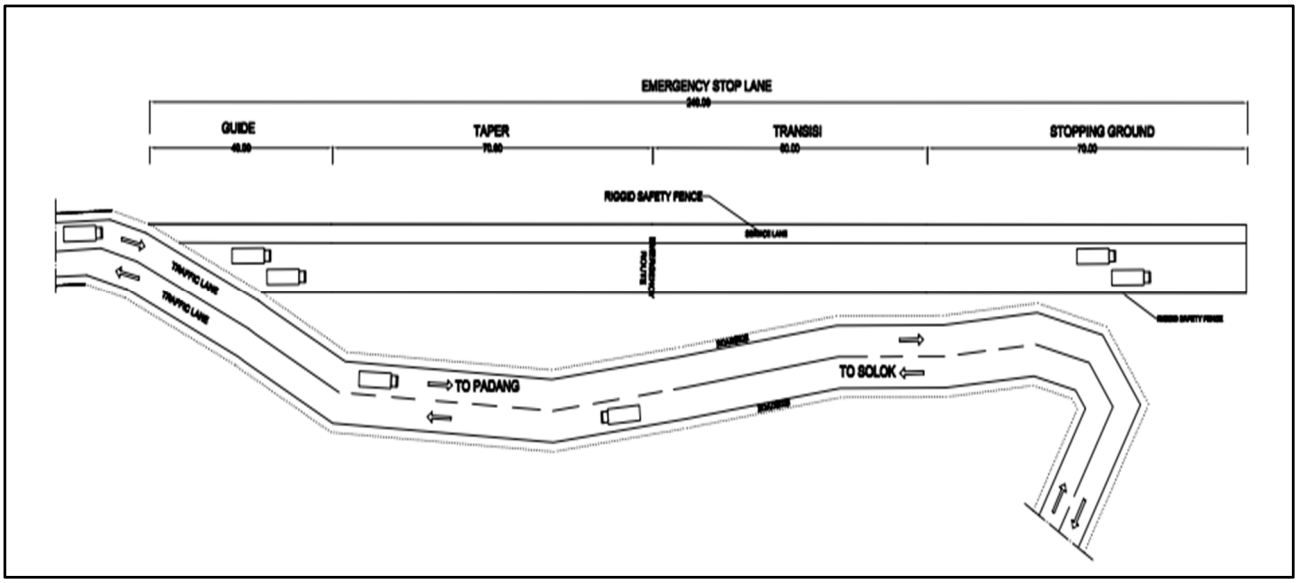

Fig. 2. The results of the dimensional analysis of the panorama 1 sitinjau lauik emergency stop route.

3.4 Structural Design of Emergency Stop Lane

3.4.1 Preliminary Design of Beam

In structural planning, an initial calculation is required where this calculation becomes a reference for planning [16]. In the JPD planning, a beam with a span of 11,000 mm was taken. Based on the rule of thumb (rule of thumb), the Preliminary Design of the beam can be calculated with the following planning:

Data:
Span = 11000 mm = 11 m
Concrete Quality (fc') = 30 Mpa
Steel Quality (fy) = 420 Mpa

Base on the *rule of thumb* as follows:

$$h = \frac{L}{10} = \frac{1100\ mm}{10} = 1100\ mm \quad (4)$$

to define b → $\frac{1}{2}\ h < b < \frac{2}{3}\ h$

$$b = \frac{1}{2} x\ h = \frac{1}{2} x 1100\ mm = 550\ mm \approx 600\ mm$$

Then the dimensions for the girder (longitudinal beam) are obtained, namely 600 x 1100 mm.

3.4.2 Preliminary Design of Plate

A plate is a rigid planar structure specifically made of monolithic material whose height is smaller than the other dimensions. The loads that generally act on plates are multidirectional and distributed. In the initial planning of the plate calculations are made on the plate that has the largest area. Based on SNI 287:2019 [17].

Dimension of L for Plate = 2,6 m = 2600 mm

$$hmin = \frac{L}{20}\ (0{,}4 + \frac{fy}{700}) \quad (5)$$
$$= 2600\ (0{,}4 + \frac{420}{700})$$
$$= 130\ mm = 13\ cm \approx\ 20\ cm$$

So for the slab, the thickness of the floor slab is taken, namely 20 cm (200 mm).

3.4.3 Preliminary Design of Coloumn

Columns are part of a building frame which occupy the most important position in the building structural system. If a failure occurs in a column, it can result in the collapse of other structural components connected to it, or even a total collapse of the entire building structure. To find a preliminary design for the column, it is calculated based on the trybutary area to obtain results that are close to the allowable stress of concrete for the width of one side b= 2,4 m, and h = 2,4 m. So the size of the column (pillar) used is 2.4 m x 2.4 m (square column) with an area = 5.76 m². The column is changed to a rectangle. The column is made into 2 pillars (2 columns) with a size of 90 cm x 320 cm and 90 cm x 320 cm = 5.76 m²

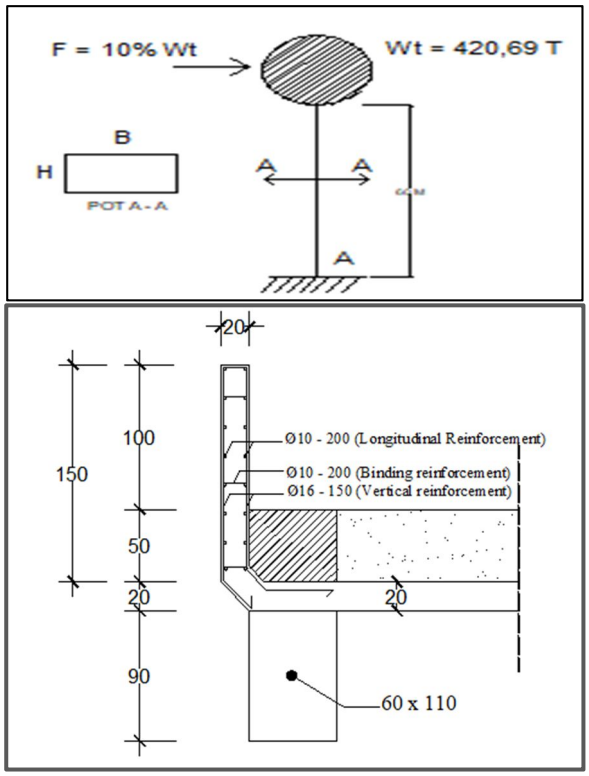

Fig. 3. Coloumn size and reinforcement.

3.4.4 Planning Data

a. Structure Condition of Emergency Escape Lane
- Length of Emergency Escape Lane = 240 m
- Length of Span (Pilar to pilar) = 11 m
- Width Lane of Emergency Escape Lane = 10 m (7 m for the stopping runway lane, 3 for service lane), not including pedestrian and width of safety fence.
- The number of longitudinal girder beams is 6 (60 x 110 m)
- The net length of the girder is elongated = 10,40 m
- The space between longitudinal girder beam= 2 m tied with beams 30 x 60 cm

b. Loading specifications
- Wheel Load (T) = 10 t (axis plan load = 20 t = ms)
- Line Load (P) = 12 t/m' for width < 5,5 m, for width > 5,5 using 50% x 12 t/m' aor 70% x 12 t/m'
- Lane Load (D) = 2,2 t/m² for L<30 m
- Shock Load $K=1+\frac{20}{50+L}=\frac{20}{50+1100}=1{,}002$

c. Specifications for concrete and reinforcing steel materials
- Concrete
- Compressive Strenght (fc') = 30 Mpa (K-350)
- Compressive Strenght Firmly (σb)=9,9 Mpa (0,33 fc')
- Modulus of elasticity (Ec)= 4700√30 = 25742,96 Mpa
- Steel Reinforcement
- Melting Strenght (fy) = 420 Mpa
- Es = 2 x 10^5 Mpa

d. Data of Stuctural Element for Emergency Escape Lane
a. Pilar Coloumn = 0,9 m x 3,2 m (review for 1 pilar)
b. Longitudinal Girder = 60 x 110 cm
c. Transverse beam (diaphragm)= 30 x 60 cm
d. Floor plate thickness= 20 cm

3.4.5 Reinforcement planning for safety

Safety Fences are a very important part of the bridge structure and support pillars. Each edge of the sidewalk must be calculated to be able to withstand a horizontal load of 100 kg/m´ - 150 kg/m´ acting on the sidewalk floor. Reinforcement Ø10 – 20 cm is used.

3.4.6 Longitudinal Girder Beam

Based on the results of the calculation of the flexible reinforcement in the longitudinal beam, a beam reinforcement design with dimensions of 600 x 1100 mm is obtained, namely:

As =8 D – 25 (Tensile Reinforcement)
As' = 4 D – 25 (Compression Reinforcement)

so that the shear reinforcement used in the 600 x 1100 mm beam is:
Support area = 2Ø13-100 mm
Field area = 2Ø13-150 mm

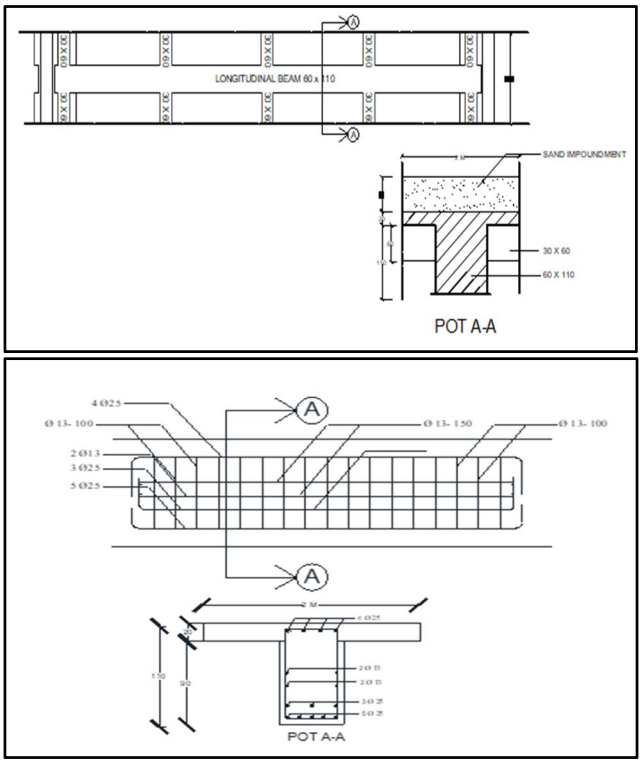

Fig. 4. Longitudinal beams and reinforcement.

3.4.7 Analysis of Flexural Reinforcement Design in Transverse Beams

The tensile reinforcement used is 3 D 16. Compressive reinforcement is taken to be the same as tensile reinforcement in the requirements for earthquake safe structural elements.

3.4.8 Analysis of Steel on Vehicle Floor Plates

The thickness of the plate used is 20 cm with reinforcement in the x direction ø10 – 150 mm and y direction ø10 – 150 mm.

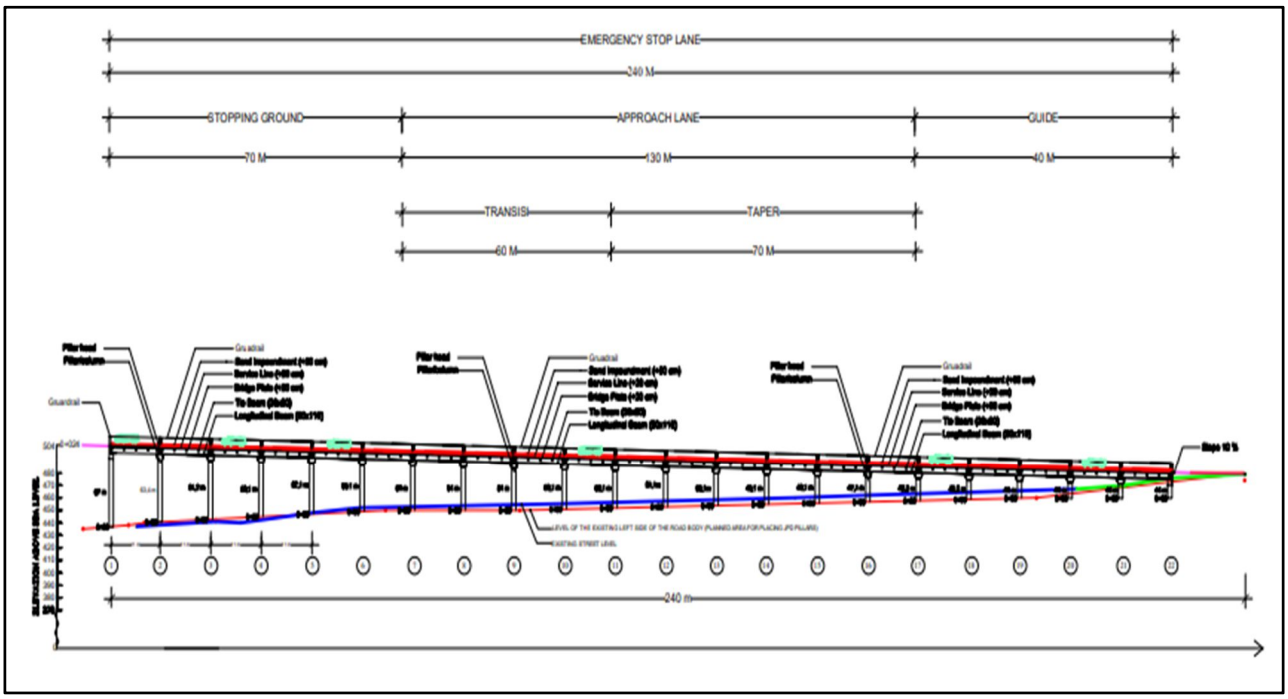

Fig. 5. Longitudinal section of emergency escape lane.

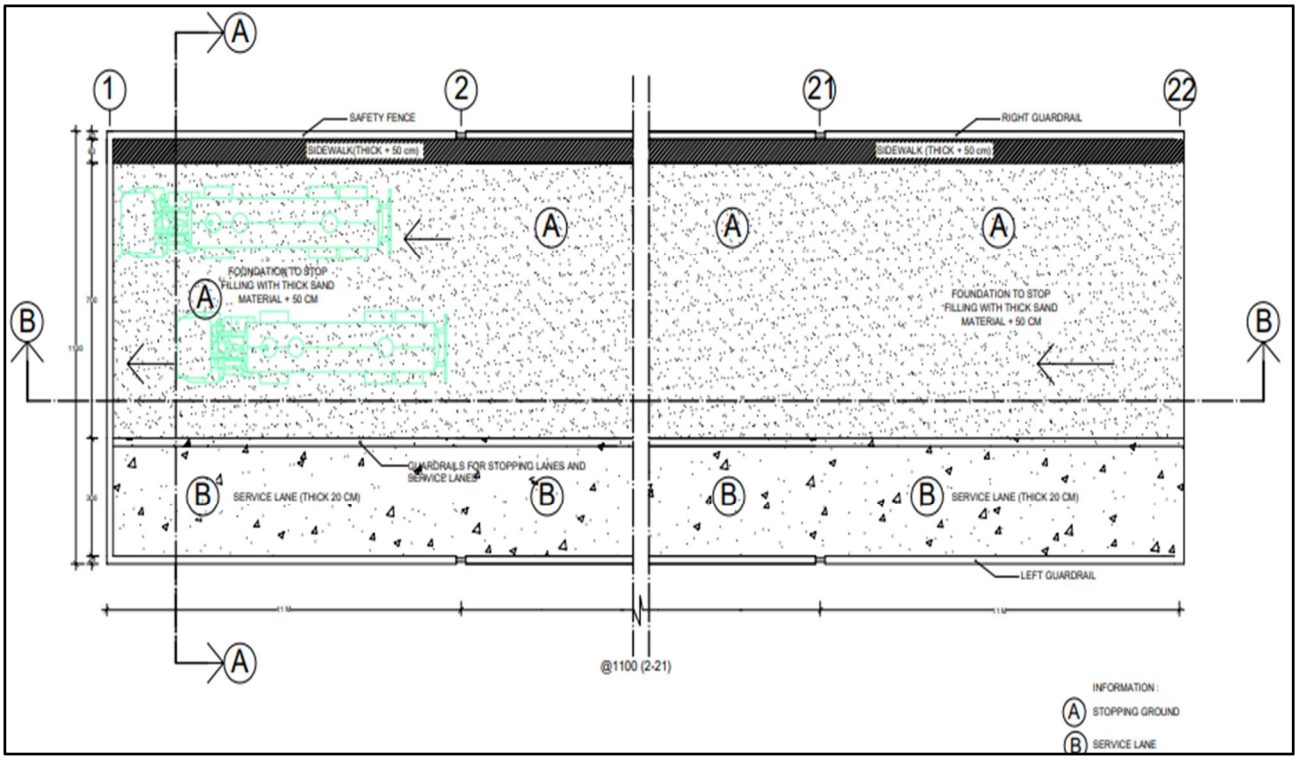

Fig. 6. Top view of emergency escape lane.

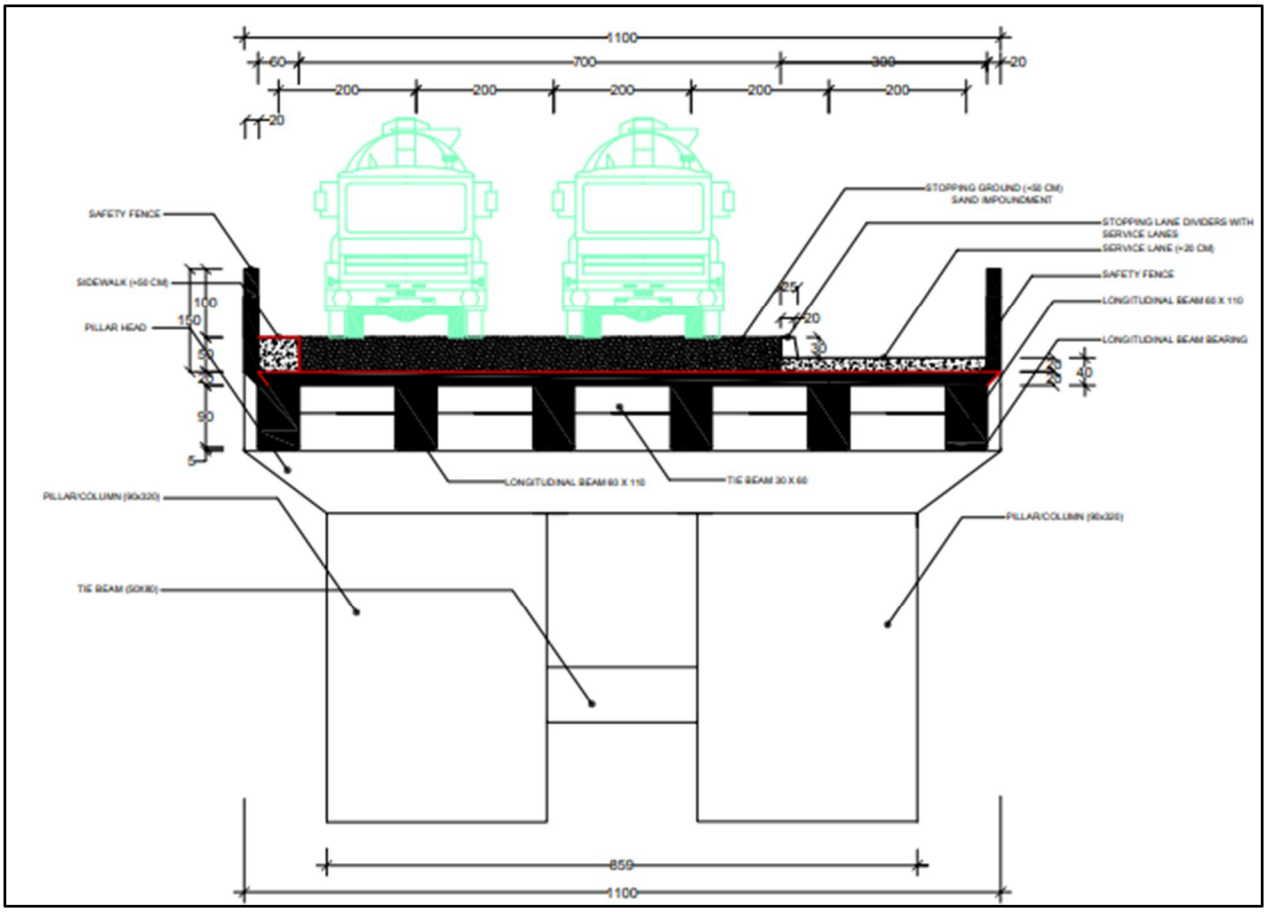

Fig. 7. Cross section of emergency stop lane panorama 1 sitinjau lauik.

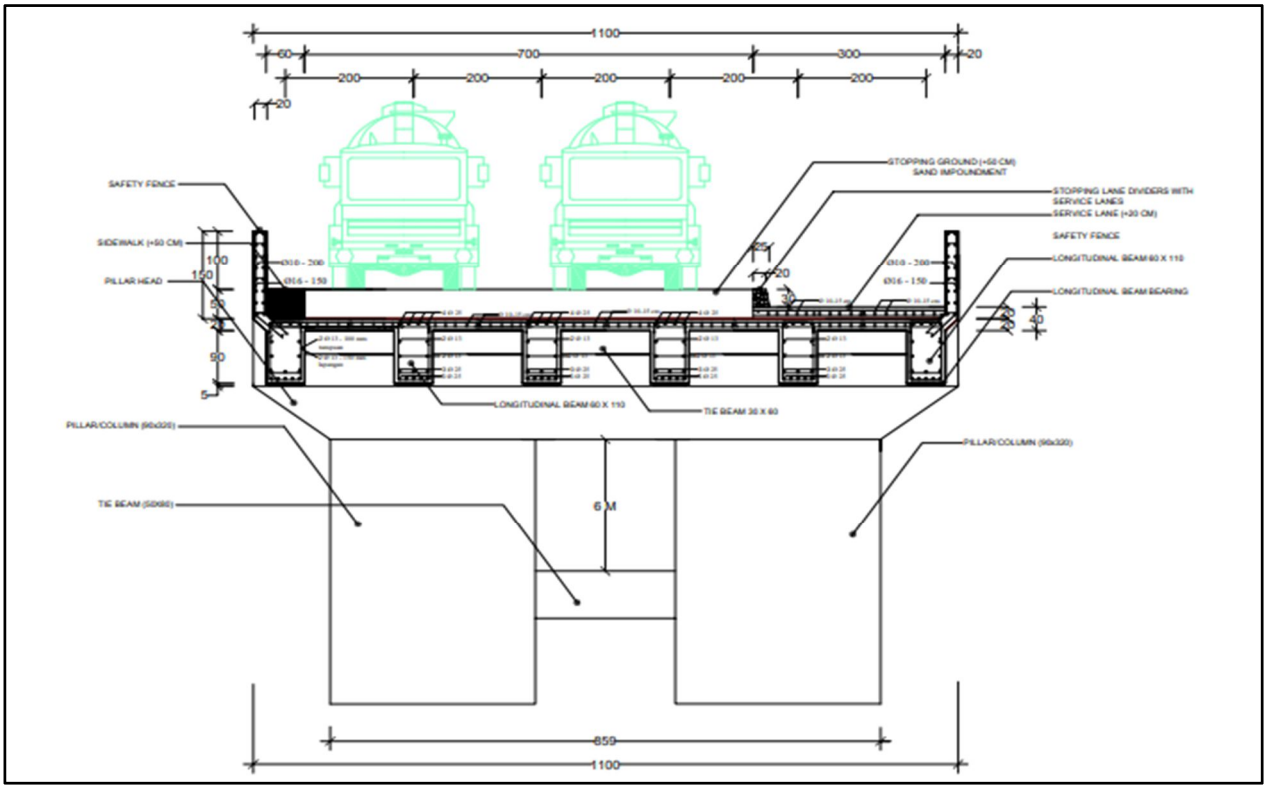

Fig. 8. Reinforcement detail of longitudinal beam and floor plate.

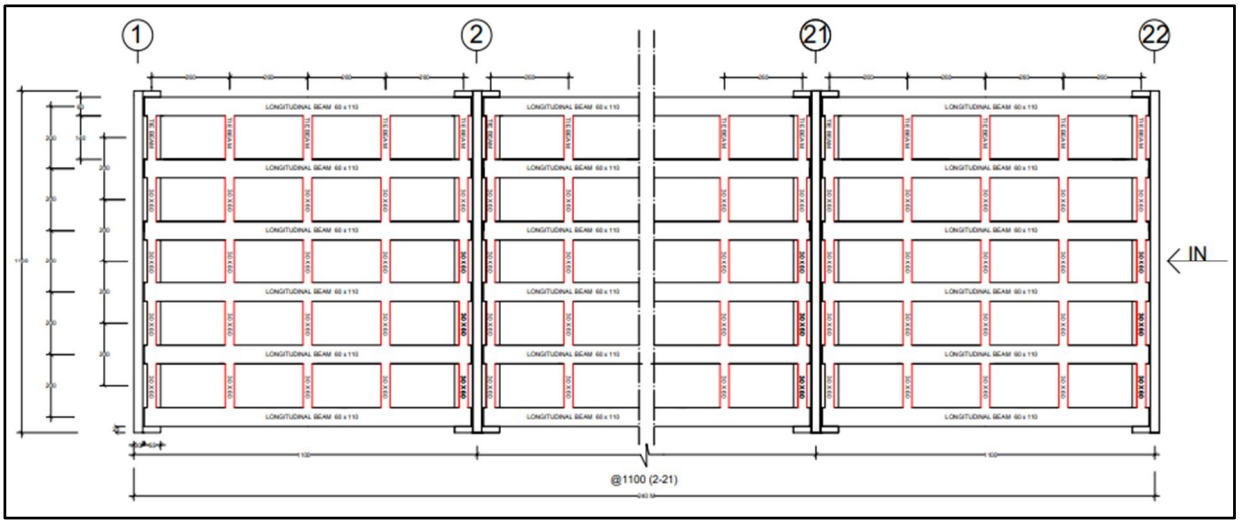

Fig. 9. Block plan for beams of emergency escape lane.

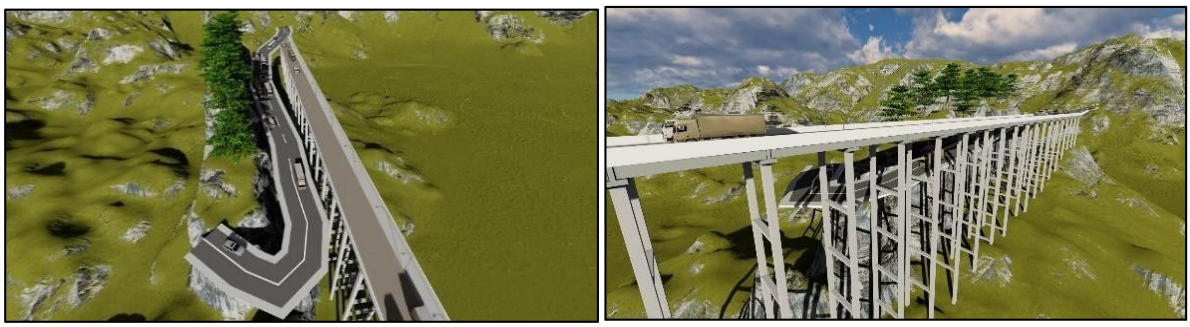

Fig. 10. Structural model of emergency stop lane panorama 1 sitinjau lauik.

4 Conclusion

Based on the analysis of the calculations, the conclusions are:

1. Emergency Stop Lane Design with overall dimensions of 240 m consisting of Segment 1 guide lane 40 m long, Segment 2 approach lane 130 (taper 70 m long and transition 60 m long) and Segment 3 Stopping Runway 70 m.

2. Structure Design of emergency Escape Lane
   a. Beams
   1. Longitudinal Beams
   b=600 mm; and h = 1100 mm
   fc' = 30 Mpa
   fy = 420 Mpa
   fys = 420 Mpa
   Es = 200000 Mpa
   D1 = 25 mm
   Øs = 13 mm
   Ts = 40 mm
   Amount of Flexible Reinforcement:
   - Compressive Reinforcement = 8 D – 25 mm
   - Tensile Reinforcement= 4 D – 25 mm
   Amount of Shear Reinforcement:
   - Focus Are = 2Ø13-100 mm
   - Field Area = 2Ø13-150 mm

   2. Tranverse Beams
   b=300 mm; and h = 600 mm
   fc' = 30 Mpa
   fy = 420 Mpa
   fys = 420 Mpa
   Es = 200000 Mpa
   D1 = 16 mm
   Øs = 13 mm
   Ts = 40 mm

   Amount of Flexible Reinforcement:
   - Compressive reinforcement = 3 D 16 mm
   - Tensile Reinforcement = 3 D 16 mm

   Amount of shear reinforcement:
   - Focus Area = 2Ø13-100 mm
   - Field Area = 2Ø13-150 mm

   b. Column
   Column/pillar size using dimensions 90cm x 320cm

   c. Floor plate
   The thickness of the plate used is 20 cm with fig reinforcement x ø10 – 150 mm and y ø10 – 150 mm.
   a. safety fence
   b. longitudinal reinforcement is found in diameter ø10 – 200 mm, tie reinforcement diameter ø10 – 200 mm, and vertical reinforcement diameter ø16 – 150 mm

Thank you to Dharma Andalas University, Andalas University, and all parties who have supported the completion of this research.

References

1. Dzikrullah, A. A., Qomaruddin, Q., Khabib, M. SNATIF Proceeding **4**, (2017).
2. Fridayanti, V. D., and Prasetyanto, D. Model of the J of Civil Engineering, **5 (2)**, 124 (2019).
3. Yuniardini, E., Nababan, D. S., and Agustan, A. Musamus Journal of Civil Engineering, **1:1**, 1 (2018)
4. U.S. Department of Transportation (USDOT). Report No. DOT HS 812 506. (2018).
5. Putra, M. R. A., Danardono, D., and Tjahjana, D. P. Fractures. Procedia Structural Integrity, **27**, 147, (2020)
6. Betaubun, H. F, Paresa, J., & Billah, A. Musamus Journal of Civil Engineering, **3:1**, 31-40 (2020)
7. Samosir, N., Siagian, P., and Bangun, P. Saintia Matematika, **2:4,** 345 (2014).
8. Eldanari, D. Final Project Atma Jaya University Yogyakarta Master of Transportation Civil Engineering. (2018)
9. Hobbs, F. D. Traffic Planning and Engineering. Gadjah Mada University Press. Yogyakarta. (1979)
10. Warpani, S. P., Traffic Engineering, Bharata, (2001)
11. Oglesby, C.H., and Hicks, R.G. Highway Engineering **4**, (1988)
12. Republic of Indonesia. Law of the Republic of Indonesia No.22 of 2009 concerning Road Traffic and Transportation, (2009)
13. Directorate General of Land Transportation, Plan Preparation Study General Land Transportation Safety, Jakarta. (2006)
14. National Transportation Safety Committee. Final Report: Traffic and Road Transport Accident Investigation Report Single Accident Overturn of a Tank Car PT. Elnusa Petrofin (BA-8146-QU) Padang-Solok Highway, Sitinjau Lauik Area. (2020)
15. Directorate General of Highways Ministry of Public Works and Public Housing. Guidelines No.05/P/BM2022 Planning for Emergency Stop Lanes, (2022)
16. Supriyadi, B., and Muntohar, A., S. (2000). Brigde: First Edition, 4th Printing. Beta Offset. (2000)
17. Board of national Standardization. SNI No. SNI 2847:2019 Structural concrete requirements for buildings building and explanation. (2019)