New fuzzy control design for photovoltaic system using LMI technique

Abdeljabar Aboulkassim[1,2*], *Said* Kririm[1], *El hanafi* Arjdal[2] and *Driss* Ben Hmamou[2]

[1]Energy and Sustainable Development Research Team, H S T Guelmim, Morocco
[2]Materials, Signals, Systems and Physical Modelling Laboratory, Faculty of Sciences, Agadir, Morocco

Abstract. The T-S Fuzzy model-based technique (T-S: Takagi-Sugeno) is used in this research to offer a new fuzzy state feedback control for solar systems with output charge. We discuss a DC-DC boost converter to manage the output power of a solar panel array under shifting meteorological circumstances. To reach optimal power point, a T-S reference model is employed to create a fuzzy state feedback control that must be tracked. Solving a series of linear matrix inequalities (LMIs) yields controller gains. Furthermore, the proposed solution reduces the oscillation disadvantage near the highest power point while simultaneously shortening the tracking time. Finally, simulation of the solar system employing the proposed state feedback control shows that the proposed approach is effective even in the face of climate change.

1 Introduction

Energy is critical to our way of life and economy. The industrial revolution increased energy demand significantly. Fossil fuels are gradually depleting. The long-term viability of our civilization is jeopardized. Greenhouse gas emissions from conventional energy generation, on the other hand, continue to rise. Global challenges include reduced carbon dioxide emissions, secure, clean, and affordable energy, and more sustainable energy systems [1]. Renewable energy sources are regarded as an excellent source of clean and sustainable energy.

Solar energy, wind energy, and other renewable energy sources... Photovoltaic (PV) systems, which appear to be one of the most promising renewable energy sources, have drawn the attention of researchers. Solar energy is environmentally friendly, low-maintenance, and low-noise [1,2].

However, two major factors limit photovoltaic system adoption. These are high installation costs and inefficient energy conversion [2]. One of the effective methods for lowering photovoltaic power system costs and increasing solar energy utilization efficiency is the high power point tracking system (MPPT) of photovoltaic modules [3]. The (MPPT) system extracts the maximum power from a Photovoltaic module, delivers it to the load, and increases efficiency [4].

* Corresponding author: abdeljabar.aboulkassim@edu.uiz.ac.ma

To increase the solar modules' output power, various techniques have been developed, including the perturb and observe (P&O) method [5, 6, 7, 8], incremental conductance (INC) methods [5, 9, 10, 11], maximum power point (MPP) estimation [5, 12], and artificial intelligence methods [13, 14, 15, 16, 17]. Vahid et al. (2018) suggested a strong feedback system linearization controller for MPPT in PV systems using a modified INC method, ensuring overall closed-circuit internal stability. Nonetheless, the system only takes a reasonable amount of time for getting to the MPP. Nabulsi and Dhaouadi (2012) proposed a new Perturb and Observe scheme utilizing fuzzy logic controller (FLC) in which the PV reference voltage is self-adjusted with variable step size to achieve the MPP accurately. Furthermore, the INC method, like the P&O method, is influenced by the same factors, necessitating a trade-off between tracking speed and oscillations to achieve an MPP. Masoum et al. (2002) proposed open-circuit voltage and short-circuit current (SCC) algorithms that, due to the approximation used in these algorithms, are unable to find the true MPP. Priyabrata Shaw and Priyabrat Garanayak (2019) provide a fast, reliable MPPT approach based on analog circuitry that enhances tracking capability by using a boost DC-DC converter.

Because they're straightforward affordability, and usefulness, the Perturb & Observe and Increment Condition methods are frequently utilized in industrial PV panels. However, a PV system with a DC/DC boost converter is treated as a linear system in these conventional controls, leading to subpar dynamic performance and significant oscillations around the MPP. Furthermore, during rapid changes in atmospheric conditions, the external disturbance is ignored, resulting in slow and incorrect tracking. On the other hand, the problem of asymmetric saturation of duty ratio (limited between 0 and 1) is not addressed in these traditional approaches, which is a source of performance degradation. Indeed, actuator saturation can degrade the performance of system with a closed-loop and, in some cases, a steady closed-loop system to become unstable [18, 19].

Many T-S fuzzy models are used in fuzzy MPPT controllers have been proposed recently. The latter model's basic concept is to group linear models to describe processes. As a result, linear control theory is widely applied to nonlinear systems by utilizing the principle of Parallel Distributed Compensation (PDC) [20]. The stability criteria of the augmented T-S fuzzy system, which are easily converted into linear matrix inequalities (LMIs), are used to calculate the fuzzy controller gains and efficiently solved using convex programming techniques [21].

This work proposes a novel MPPT controller based on the TS fuzzy model that can effectively eliminate the oscillation of the PV system in various steady states, thereby reducing overshoot and accelerating the time response. As a summary of the suggested fuzzy control strategy: First, a fuzzy TS controller is created using a nonlinear model of the photovoltaic system. The optimal photovoltaic voltage is then used to generate an optimal reference model, which is generated using an algorithm for the adaptive neuro-fuzzy inference system (ANFIS) with inputs of cell temperature and solar irradiation. The best reference model and the planned T-S fuzzy controller are then combined to generate a non-linear tracking controller. The Lyapunov method is used to analyze and describe the augmented system's stability.

2 T–S fuzzy model representation of PV system

2.1 Boost converter model

As seen in Figure 1, the following equations describe the DC-DC boost converter's dynamic model:

$$\begin{cases} \dot{i}_L = -\frac{R_L}{L} i_L + \frac{1}{L} V_{PV} - \frac{1-u}{L}(V_0 + v_d - R_m i_L) \\ \dot{V}_{PV} = -\frac{1}{C_1} i_L + \frac{1}{C_1} i_{PV} \end{cases} \quad (1)$$

An important point to remember is that the diode's forward voltage v_d and the internal resistance R_m have been taken into account in this work, which can affect the PV system's regulation.

The PV system can be described using the previous equations and a new state variable [22], such as $\dot{u} = u_{PV}$, according to the nonlinear model :

$$\dot{x}(t) = f\big(x(t)\big) + Bu(t) + \eta(t), u(t) \in [0, 1], \quad (2)$$

Where

$$f\big(x(t)\big) = \begin{bmatrix} -\frac{R_L}{L} i_L + \frac{1}{L} V_{PV} + \frac{V_0 + v_d - R_m i_L}{L} u_{PV} \\ -\frac{1}{C_1} i_L \\ 0 \end{bmatrix}, x = \begin{bmatrix} i_L \\ V_{PV} \\ u_{PV} \end{bmatrix}, \ B = \begin{bmatrix} 0 \\ 0 \\ 1 \end{bmatrix}, \ \eta = \begin{bmatrix} -\frac{V_0 + v_d}{L} \\ \frac{1}{C_1} i_{PV} \\ 0 \end{bmatrix}$$

Table 1. Photovoltaic conversion system parameters.

System Parameters	**Values**
Boltzmann's constant, k	$1.38\ e^{23}\ J/K$
Ideal factor of photovoltaic cell, A	1.1 V
Shunt resistance, R_{sh}	$360\ \Omega$
Series resistance, R_s	$0.18\ \Omega$
Number of cells connected in series, n_s	36
Number of modules in parallel, n_p	1
Temperature reference, T_0	$298.15\ K$
Irradiation reference, G_0	$1000\ W/m^2$
Open-circuit voltage, V_{OC}	$21.6\ V$
Nominals short-circuit current, I_{scn}	$3.8\ A$
Nominal PV voltage, V_{pvn}	$21\ V$
Load resistance, R	$35\ \Omega$
Output capacitor, C_2	$4\ e^{-6}\ F$
Input capacitor, C_1	$1\ e^{-3}\ F$
Inductor, L	$4\ e^{-2}\ H$
Resistance of self-inductance, R_L	$0.5\ \Omega$
Resistance of IGBT characterizing, R_m	$5\ e^{-2}\ \Omega$
Diode's forward voltage, v_d	$1.9\ V$

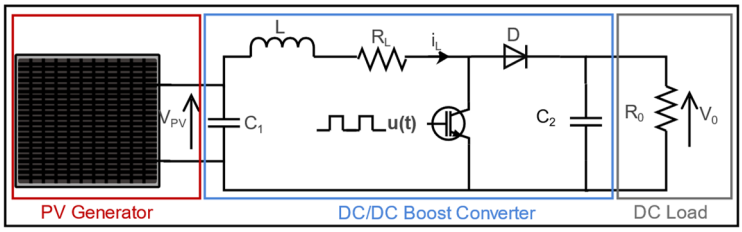

Fig. 1. Solar power generation structure

Table 2. Photovoltaic system parameters.

Parameters	Significations
V_{PV}	PV output voltage
i_{PV}	PV output current
u	Control input corresponding to the duty cycle
i_L	Boost self-inductance current
V_0	Output load voltage
i_0	Output load current

The photovoltaic system under consideration, as shown in Figure 1, consists of a DC load, a DC / DC boost transformer and a PV panel. The following photovoltaic system parameters (table 2) will be used in this study:

Figure 1 depicts a global control structure scheme for achieving the MPP under various climatic conditions.

In order to generate the best PV current I_{PVopt}, the two quantities T and G are sent to the MPP searching algorithm.

In order to provide the desired trajectory $x(t)$ for $x_r(t)$ tracking, this latter is taken into consideration as an input control signal for the T-S fuzzy reference model. To achieve the best power tracking, a T-S fuzzy controller is integrated into the MPPT structure to force the load power to follow the optimal power P_{opt}.

2.1 T.S Fuzzy system of the Photovoltaic System

The Photovoltaic nonlinear model is transformed into a T.S fuzzy model to create the fuzzy controller, with i_L and V_o serving as decision variables [22]. As a result, the nonlinear state space form is as follows:

$$\dot{x}(t) = A(i_L, V_o)x(t) + Bu(t) + \eta(t) \tag{3}$$

Where

$$A(i_L, V_o) = \begin{bmatrix} -\frac{R_L}{L} & \frac{1}{L} & \frac{V_o + v_d - R_m i_L}{L} \\ -\frac{1}{C_1} & 0 & 0 \\ 0 & 0 & 0 \end{bmatrix},$$

$$B = \begin{bmatrix} 0 \\ 0 \\ 1 \end{bmatrix}, \qquad \eta = \begin{bmatrix} -\frac{V_o + v_d}{L} \\ \frac{1}{C_1} i_{PV} \\ 0 \end{bmatrix}$$

Assume that:

$$i_{Lmin} \leq i_L \leq i_{Lmax}\ , \quad V_{0min} \leq V_o \leq V_{0max} \tag{4}$$

The nonlinear system (3) can be described by a T-S model with $r = 2^n = 2^2$ fuzzy (if-then) rules using sector nonlinearity transformation [23]:

Rule *i:* If $z_1(t)$ is F_{1i} and $z_2(t)$ is F_{2i} then

$$\dot{x}(t) = A_i x(t) + B_i u(t) + \eta(t), \qquad i = 1, \ldots, 4$$

where $z_1 = i_L$ and $z_2 = V_0$ are the premise variables, F_{11}, F_{12}, F_{21} and F_{22} are the membership functions given by:

$$\begin{cases} F_{11}(i_L) = \frac{i_L(t) - i_{Lmin}}{i_{Lmax} - i_{Lmin}}\ , \ F_{12}(i_L) = 1 - F_{11}(i_L) \\ F_{21}(V_0) = \frac{V_0(t) - V_{0min}}{V_{0max} - V_{0min}}\ , \ F_{22}(V_0) = 1 - F_{21}(V_0) \end{cases} \tag{5}$$

The local model matrices are defined as follows:

$$A_1 = \begin{bmatrix} -\frac{R_L}{L} & \frac{1}{L} & \frac{V_{0max} + v_d - R_m i_{Lmax}}{L} \\ -\frac{1}{C_1} & 0 & 0 \\ 0 & 0 & 0 \end{bmatrix}, \qquad A_2 = \begin{bmatrix} -\frac{R_L}{L} & \frac{1}{L} & \frac{V_{0min} + v_d - R_m i_{Lmax}}{L} \\ -\frac{1}{C_1} & 0 & 0 \\ 0 & 0 & 0 \end{bmatrix},$$

$$A_3 = \begin{bmatrix} -\frac{R_L}{L} & \frac{1}{L} & \frac{V_{0max} + v_d - R_m i_{Lmin}}{L} \\ -\frac{1}{C_1} & 0 & 0 \\ 0 & 0 & 0 \end{bmatrix}, \qquad A_4 = \begin{bmatrix} -\frac{R_L}{L} & \frac{1}{L} & \frac{V_{0min} + v_d - R_m i_{Lmin}}{L} \\ -\frac{1}{C_1} & 0 & 0 \\ 0 & 0 & 0 \end{bmatrix},$$

$$B_1 = B_2 = B_3 = B_4 = \begin{bmatrix} 0 \\ 0 \\ 1 \end{bmatrix}.$$

The fuzzy rule-based system's overall output is provided by the product-inference rule, singleton fuzzifier, and center of gravity defuzzifier.

$$\dot{x}(t) = \sum_{i=1}^{r} h_i\big(z(t)\big)\big(A_i x(t) + B_i u(t)\big) + \eta(t) \tag{6}$$

Where $h_i(z) = \omega_i(z) / \sum_{i=1}^{r} \omega_i(z)\,,\ \omega_i(z) = \prod_{j=1}^{n} F_{ij}(z_j)$

For all $t > 0, h_i(z) \geq 0$ and $\sum_{i=1}^{r} h_i(z) = 1$

The following lemma [24] is required to facilitate the design of a fuzzy controller.

Lemma 1: If the following conditions hold:

$$\begin{gathered} M_{ii} < 0 \qquad with \quad i = 1, 2, \ldots, r \\ \frac{2}{r-1} M_{ii} + M_{ij} + M_{ji} < 0\ with\ i \neq j;\ \ i, j = 1, 2 \ldots r \end{gathered} \tag{7}$$

The following inequality holds true:

$$\sum_{i=1}^{r}\sum_{j=1}^{r} h_i\big(z(t)\big)\, h_j\big(z(t)\big)\, M_{ij} < 0$$

3 T-S fuzzy state feedback control analysis and synthesis

The goal is to create a T-S Fuzzy state feedback control capable of driving the Photovoltaic system's state $x(t)$ to track an optimal reference model $x_r(t)$.

$x(t) - x_r(t) \to 0$ as t tends towards infinity

The error tracking system can be rewritten as follows:

$$\dot{e}(t) = \sum_{i=1}^{r} h_i(z(t))(A_i\, e(t) + B_i u(t)) \tag{8}$$

Where, A_i and B_i are appropriate subsystem matrices, and $e(t) = x(t) - x_r(t)$ is the state of the tracking error system.

The tracking control problem is addressed by the state feedback controllers $u(t)$ as follows:

Rule i: if $z_1(t)$ is F_{1i} and $z_2(t)$ is F_{2i} then

$$u(t) = -K_i e(t)$$

The final output of the fuzzy controller is given by the following form:

$$u(t) = -\sum_{i=1}^{r} h_i\big(z(t)\big) K_i\, e(t) \tag{9}$$

Applying control low to the error system, the closed loop system takes the following form:

$$\dot{e}(t) = \sum_{i=1}^{r}\sum_{j=1}^{r} h_i(z(t)) h_j(z(t)) \Big(A_i e(t) - B_i K_j e(t)\Big)$$

$$\dot{e}(t) = \sum_{i=1}^{r}\sum_{j=1}^{r} h_i(z(t)) h_j(z(t)) \big(A_i - B_i K_j\big)\, e(t)$$

$$\dot{e}(t) = \sum_{i=1}^{r}\sum_{j=1}^{r} h_i(z(t)) h_j(z(t))\, A_{ij}\, e(t)$$

Where

$$A_{ij} = (A_i - B_i K_j) \tag{10}$$

Theorem 1: If a symmetric positive definite matrix P and matrices G and $R_j (with\ j = 1, 2, 3, 4)$ exist, the closed loop system (9) is asymptotically stable, and the following LMIs can be solved:

$$M_{ii} < 0 \qquad with \quad 1 \le i \le 4 \tag{11}$$

$$\left(\frac{2}{3} M_{ii} + M_{ij} + M_{ji}\right) < 0\ with\ 1 \le i < j \le 4 \tag{12}$$

Where

$$M_{ij} = \begin{bmatrix} A_i G + G^T A_i^T - B_i R_j - R_j^T B_i^T & P + A_i G - B_i R_j - G^T \\ * & -G - G^T \end{bmatrix} \tag{13}$$

The control law is given by:

$$\boldsymbol{K_j = R_j G^{-1}}$$

Proof. According to Theorem 1 of [25], the dynamics of the system (9) are asymptotically stable if and only if the following conditions are met:

$$\begin{bmatrix} AX_1 + X_1{}^T A^T & P + AX_2 - X_1^T \\ * & -X_2 - X_2^T \end{bmatrix} < 0 \tag{14}$$

We replace A with $\sum_{i=1}^{r}\sum_{j=1}^{r} h_i\big(z(t)\big)h_j\big(z(t)\big)\,\mathrm{A_{ij}}$ and X_1, X_2 with G in condition (14), as a result, we apply Lemma 1 and we obtain the conditions (11), (12)and (13) where G is a free nonsingular matrix.

$\boldsymbol{K_j\, G = R_j}$**.** This completes the proof.

4 Simulation results

To validate the effectiveness and validity of the proposed method, simulation tests were performed on a solar power generation system (3) using the parameters listed in Table 1 with $|\mathrm{V_0}| \leq 17.1$ and $|\mathrm{i_L}| \leq 3.5$.

Solving the LMIs in theorem1 with the MATLAB LMI TOOLBOX yields the T-S fuzzy controller gains.

We have:

$$\begin{aligned} K_1 &= [0.5354 \quad 0.0563 \quad 310.7546] \\ K_2 &= [0.5429 \quad 0.0569 \quad 310.8556] \\ K_3 &= [0.5016 \quad 0.0593 \quad 311.1229] \\ K_4 &= [0.4951 \quad 0.0583 \quad 310.2274] \end{aligned}$$

In open loop, we observe in figures 3, 4, 5 and 6 that the state of the PV system $x(t) = (i_L \quad V_{PV} \quad u_{PV})^T$ moves away from the reference state and does not follow the optimal reference model $x_r(t) = (i_{Lopt} \quad V_{PVopt} \quad u_{PVopt})^T$. Whereas in closed loop, figures 1 and 2 show that the fuzzy controller capable of driving the state of the PV system $x(t)$ to track an optimal reference model $x_{opt}(t)$. Then, the feedback tracking control is required to satisfy: $e(t) = x(t) - x_r(t) \rightarrow 0$ as t increase.

With:

$$\begin{cases} e_1(t) \\ e_2(t) \\ e_3(t) \end{cases} = \begin{cases} x_1(t) - x_{r_1}(t) \\ x_2(t) - x_{r_2}(t) \\ x_3(t) - x_{r_3}(t) \end{cases}$$

For the different fuzzy controller gains K_i $(i = 1, \dots, 4)$

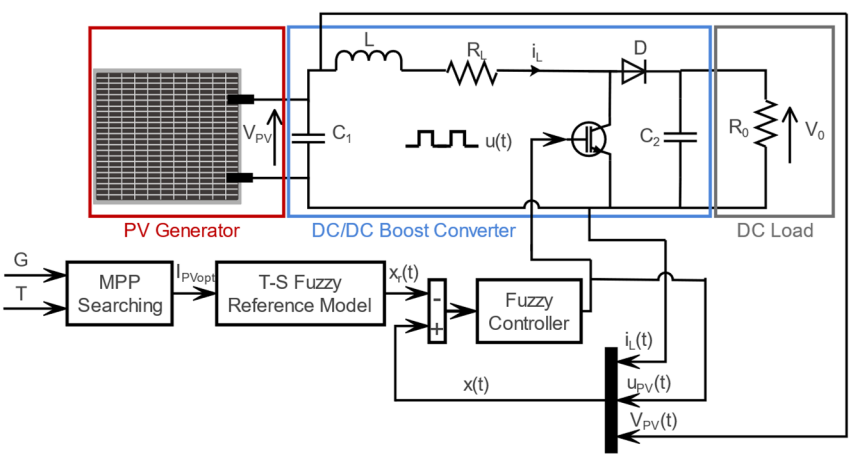

Fig. 2. Fuzzy control strategy for MPPT

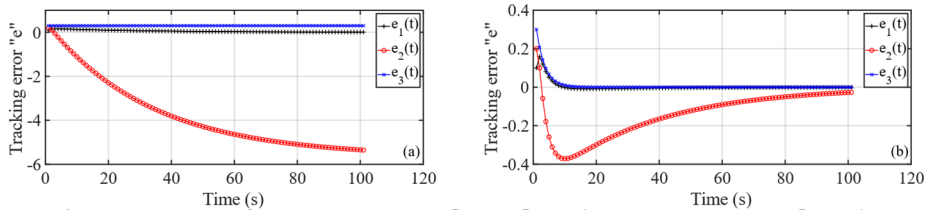

F

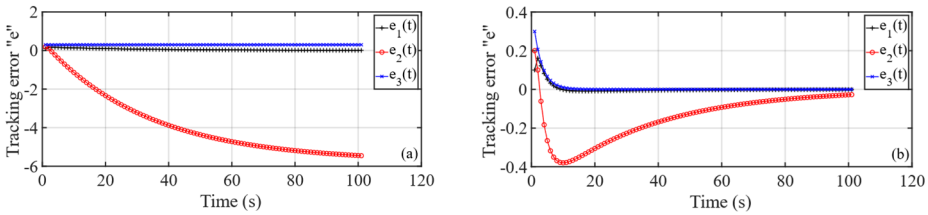

Trajectories of tracking error state e(t): (a) open loop subsystem 2, (b) closed loop subsystem 2

F

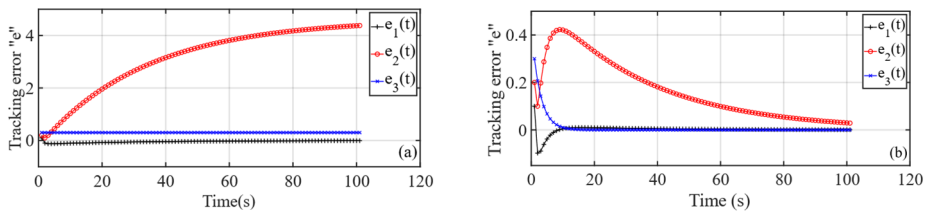

Trajectories of tracking error state e(t): (a) open loop subsystem 3, (b) closed loop subsystem 3

F

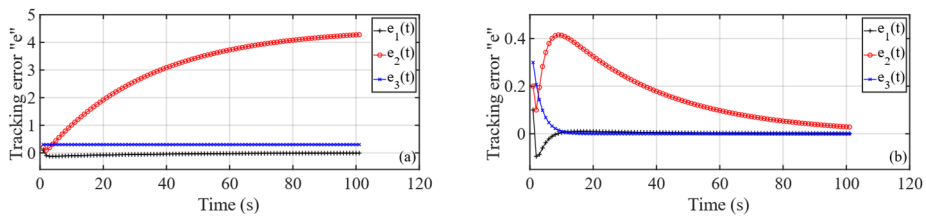

Fig. 6. Trajectories of tracking error state e(t): (a) open loop subsystem 4, (b) closed loop subsystem 4

Conclusion

This paper proposes an efficient TS fuzzy controller for MPP tracking in PV conversion systems. Solving a set of LMI criteria results in a stable controller capable of tracking the global maximum power point. In steady state, the proposed controller can guide the photovoltaic system to track the optimal reference model with high tracking accuracy and minimal oscillation.

References

1. Jancarle L. Dos Santos, Fernando L. M. Antunes and Anis Chehab, "A Maximum Power Point Tracker for PV Systems Using a High-Performance Boost Converter", Solar Energy, Issue 7, Vol. 80, pp. 772- 778,2005.

2. Ting-Chung Yu and Tang-Shiuan Chien, "Analysis and Simulation of Characteristics and Maximum Power Point Tracking for Photovoltaic Systems", Proceedings of Power Electronics and Drive Systems Conference, pp. 1339 - 1344, Taipei,2009.
3. Roberto Faranda, Sonia Leva, "Energy Comparison of MPPT techniques for PV Systems", Wseas Transactions on Power System, Issue 6,Vol. 3, pp. 446-455, June 2008.
4. D. P. Hohm and M. E. Ropp, "Comparative Study of Maximum Power Point Tracking Algorithms using an experimental, programmable, maximum power point tracking test bed", Proceedings of Photovoltaic Specialists Conference, pp. 1699 - 1702,USA,2000.
5. Abdessalem AK, Massoud AM, Ahmed S, et al. (2011) High performance adaptive perturb and observe MPPT technique for photovoltaic based microgrids. IEEE Transactions on Power Electronics 26(4): 1010–1021.
6. De Brito MAG, Galotto L, Sampaio LP, et al. (2013) Evaluation of the main MPPT techniques of photovoltaic applications. IEEE Transactions on Industrial Electronics 60(3): 1156–1167
7. Lyden S and Haque ME (2015) Maximum power point tracking techniques for photovoltaic systems: a comprehensive review and comparative analysis. Renewable and Sustainable Energy Reviews 52: 1504–1518
8. Subudhi B and Pradhan R (2012) A comparative study on maximum power point tracking techniques for photovoltaic power systems. IEEE Transactions on Sustainable Energy 4(1): 89–98
9. Liu F, Duan S, Liu F, et al. (2008) A variable step size INC MPPT method for PV systems. IEEE Transactions on Industrial Electronics 55(7): 2622–2628.
10. Sera D, Mathe I, Kerekes T, et al. (2013) On the perturb-and-observe and incremental conductance MPPT methods for PV systems. IEEE Journal of Photovoltaics 3(3): 1070–1078
11. Vahid JF, Sheikholeslam F and Mohammad RJM (2018) Maximum power point tracking with constraint feedback linearization controller and modified incremental conductance algorithm. Transactions of the Institute of Measurement and Control 40(7): 2322-2331
12. Mohammed ASM, Hooman D and Ewald FF (2002) Theoretical and experimental analyses of photovoltaic systems with voltage-and current-based maximum power-point tracking. IEEE Transactions on Energy Conversion 17(4): 514–522
13. Chiu CS (2010) T-S fuzzy maximum power tracking control of solar power generation systems. IEEE Trans Energy Convers 25:1123– 1132
14. Chiu CS, Ouyang YL (2011) Robust maximum power tracking control of uncertain photovoltaic systems: a unified T-S fuzzy model based approach. IEEE Trans Control Syst Technol 19:1516– 1526
15. Salah CB, Ouali M (2011) Comparison of fuzzy logic and neural network in maximum power point tracker for PV systems. Electric Power Syst Res 81:43–50
16. Dahmane M, Bosche J, El-Hajjaji A, Davarifar M (2013) T-S Implementation of an MPPT Algorithm for Photovoltaic Conversion System Using Poles Placement and H∞ Performances. In: Proceedings of the 3rd international conference on systems and control, Oct 29–31
17. Nabulsi A A, Dhaouadi R (2012) Efficiency optimization of a DSP-based standalone PV system using fuzzy logic and dual-MPPT control. IEEE Trans Ind Inform 8:573–584
18. Cao YY and Lin Z (2003b) Robust stability analysis and fuzzy scheduling control for nonlinear systems subject to actuator saturation. IEEE Transactions on Fuzzy Systems 11(1): 57 67

19. Henrion D (1999) Stabilité des systèmes linéaires incertains à commande contrainte. PhD Thesis, Institut National des Sciences Appliquées de Toulouse, France
20. Tanaka,K.; Wang, H. O.: Fuzzy Control Systems Design and Analysis: A Linear Matrix Inequality Approach. Wiley, New York (2001)
21. Gahinet, P.; Nemirovski, A.; Laub, A.J.; Chilali, M.: LMI Control Toolbox. MathWorks, Natick (1995)
22. Ounnas, D.; Ramdani, M.; Chenikher, S.; Bouktir, T.: An Efficient Maximum Power Point Tracking Controller for Photovoltaic Systems Using Takagi-Sugeno Fuzzy Models. Arb J Sci Eng (2017)
23. Ohtake, H.; Tanaka, K.; Wang, H.: Fuzzy modeling via sector nonlinearity concept. Integr. Comput. Aided Eng. 10(4), 333–341(2003)
24. X.-H. Chang, L. Zhang and J. H. Park : Robust static output feedback H∞ control for uncertain fuzzy systems, Fuzzy Sets and Systems (2014), http://dx.doi.org/10.1016/j.fss.2014.10.023
25. S. Kririm, B. Boukili, A. El-Amrani and A. Hmamed : H∞ Analysis For Descriptor Systems : A Strict LMI Approach, 2020 1st Int. Conf. on Innovative Research in Applied Science, Engineering and Technology (IRASET), Meknes, Morocco, March 19-20, 2020.