Modeling frame of a diesel locomotive bogie in solidworks software

A. Grischenko[1*], *M.* Shrajber[1], and *V.* Ivanov[1]

[1]Emperor Alexander I Petersburg State Transport University, 9, Moskovsky pr., 190031, Saint Petersburg, Russian Federation

Abstract. The article considers the possibility of using the finite element method for strength calculations of nodes and parts of modern locomotives. There are examples of solid-state models construction of bogie frames in SolidWorks software package. Developed finite-element models allow determining the tense-strained state of the elements of the crew part of locomotives. The final outcome of modeling is the construction of stress distribution diagrams in the locomotive bogie frame. The data obtained as a result of finite-element modeling can be recommended for use when creating new modern units of locomotives as well as for modernizing and increasing the reliability of existing.
Keywords: locomotive bogie frame, locomotive mechanical equipment

1 Introduction

Modern operating conditions of the rolling stock of the railroads in the Russian Federation dictate high requirements for the reliability and durability of its mechanical equipment. The increase in railway traffic speeds and freight traffic volumes, development of territories with severe climatic conditions leads to the growth of loads on elements of traction and non-traction rolling stock, including the crew part [1-5]. The assemblies and parts of modern locomotives are a number of complex and sufficiently diverse in form joints and structures, which accept a large variety of vertical and horizontal loads. The size and shape of elements of mechanical equipment of locomotives depend on the magnitude of forces, deformations and stresses arising in them. The design features of nodes and parts of the crew part are also influenced by the purpose and operating conditions of the locomotive. Mechanical equipment is subject to static as well as dynamic loads. The selected calculation method must accurately take into account the effects of operating loads.

During operation, locomotive bogie frames are subjected to both static loads (from the weight of the body and the equipment installed in the body) and dynamic loads (e.g. traction and braking forces). Since locomotive bogie frames perform their functions under alternating stresses, they should be calculated for fatigue strength.

One of the ways to improve the accuracy of calculation methods for predicting the residual life of bogie frames is to determine the occurring stresses taking into account the features of physical and chemical properties of the material.

*Corresponding author: goshapti4ka@yandex.ru

The causes of failures of mechanical equipment elements of a locomotive in operation most often are small cracks and fractures, which provoke fatigue processes. Longevity of elements may depend on occurrence of defects in zones where the value of stress values is the highest. It is known that the frame of a locomotive bogie is subjected to fatigue failure of supporting structures due to the development of microplastic deformations, which form a crack in the course of time. Fatigue failure of metal structures occurs at a certain intensity of microplastic deformations, depending on the characteristics and homogeneity of the material. Therefore, high requirements are imposed on locomotive bogie frames during operation and manufacturing.

In order to extend the service life and increase the probability of failure-free operation, the bogie frame elements that absorb the highest loads during operation should be strengthened. For this reason, research and calculations of the tense-strain state of locomotive structures and development of their modernization methods are of increasing importance.

The indicators of locomotive bogie frames, both strength and weight ones, depend on technological and design factors. On the basis of these factors, the following are determined: the principal scheme of the bogie frame, describing the forces acting on it, the design of the main load-bearing elements, as well as the permissible level of stress concentration in the nodes. The zones where static forces are applied depend on their magnitude, on the traction characteristics of the locomotive, its design, the type of spring suspension which determines the location of support reactions.

The finite element method can be considered one of the best numerical methods for solving problems of mechanically deformable solid bodies. By now, extensive experience has been gained in its implementation in various areas of mechanical engineering. It is used in solving physical problems, such as load-carrying capacity analysis of structures and the theory of elasticity. The application of this method makes it possible to increase the accuracy of calculations, to determine the values of stress in parts of complex shapes, in beam joints, and in the areas where individual parts are connected to load-bearing elements.

The creation of solid models of locomotive mechanical equipment will make it possible to carry out strength research and calculations of both individual structural parts and the entire assembly in an integrated manner, which plays an important role in ensuring the operability and safety of newly designed and upgraded locomotives.

In order to extend the service life and increase the probability of failure-free operation, it is necessary to reinforce the bogie frame elements that absorb the highest loads during operation. Therefore, research and calculations of the tense-strain state of locomotive structures and development of methods for their modernization are becoming increasingly important.

The indicators of locomotive bogie frames, both strength and weight, depend on technological and design factors. On the basis of these factors, the following are determined: the principal scheme of the bogie frame, characterizing the forces acting on it, the design of the main bearing elements, as well as the permissible level of stress concentration in the nodes. The application zones of static forces depend on their magnitude, on the traction characteristics of the locomotive, its design, and the type of spring suspension which determines the location of support reactions.

The finite element method can be considered one of the best numerical methods for solving problems of mechanically deformable solids. By now, much experience has been accumulated in its application in various fields of mechanical engineering. It is used in solving physical problems, such as bearing capacity analysis of structures and theory of elasticity. The application of this method makes it possible to increase the accuracy of calculations, to determine the values of stresses in parts of complex shapes, in beam joints, as well as in the joints of individual parts with load-bearing elements.

The creation of solid models of locomotive mechanical equipment will make it possible to conduct comprehensive strength studies and calculations of both individual structural parts and the whole unit, which plays an important role in ensuring the operability and safety of newly designed and modernized locomotives.

2 Modeling of the tense-strain state of the passenger locomotive bogie frame

This paper analyzes the tense-strain state of passenger locomotive bogie frame using SolidWorks software package. This software package is designed to create a full-fledged finite-element model of a part or assembly, taking into account the peculiarities of their design, material, the action of forces. Also, its advantage is that it allows us to make tests of the traction rolling-stock, which are quite expensive when they are carried out in real conditions.

To reduce the calculation time, it was decided to build a simplified solid model of the bogie frame of TEP70BS series diesel locomotive.

To create the assembly, the following elements of the TEP70BS locomotive bogie frame were built:

- side panels (2 units);
- cross beams (2 units);
- beam end frame (1 unit);
- bogie pin beam (1 unit).

The simplified solid model of the bogie frame, as well as the distribution of the finite element mesh on its surface is shown in Fig. 1. When generating the finite-element mesh idealization of the research object, the volumetric finite elements were used.

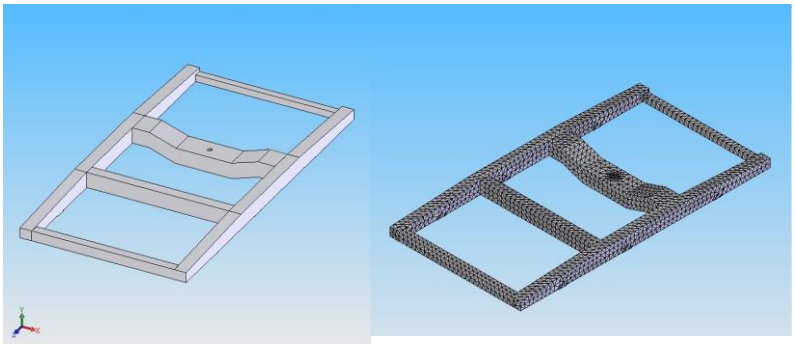

Fig. 1. Simplified solid model of the TEP70BS locomotive bogie frame for static calculation.

Various carbon steels are most commonly used as a material for locomotive load-bearing structures. Carbon steel is the most common product of the metallurgical industry and is widely used for all kinds of structures (railway bridges, elements of buildings and structures, etc.), as well as for the manufacture of bogie frames of rolling stock. Unlike carbon steel, alloyed steel has higher strength, but is a more expensive material.

For the purpose of tense-strain analysis of the bogie frame it was decided to determine the values of arising stresses when manufacturing this design from carbon steel 20ГФЛ, as well as when using 30ХНМЛ grade alloyed steel for manufacturing.

During the static calculation, the load corresponding to the weight of TEP70BS diesel locomotive, which falls on its bogies, was taken as the impact. The division of the calculation scheme into the finite elements and the calculation of stresses were performed on computer.

The results of calculation of stress values in the locomotive frame when using steel grade 20GFL under static load are shown in Fig. 2..

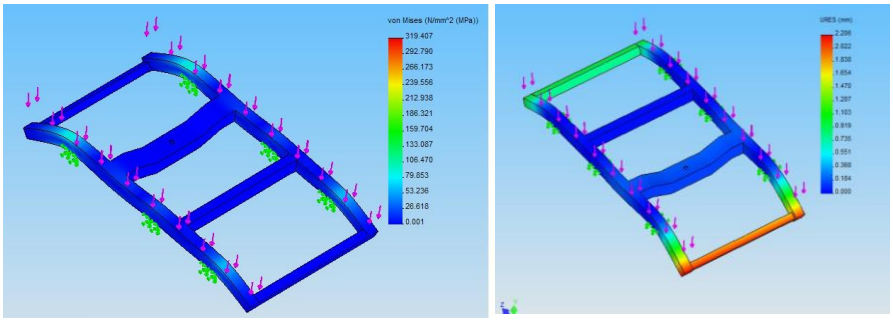

Fig. 2. Stresses and deformations occurring in the frame of locomotive bogie under static load when using 20GFL steel.

Thus, as a result of the calculation, it was found that the maximum stress from the static load at some points can be 319, 407 MPa, which significantly exceeds the ultimate strength of steel. However, the average value of stresses in most structural elements is 53.236 MPa. These values indicate that the bogie frame structure has a large margin of safety. However, a significant excess of the allowable stresses indicates that in vulnerable areas mechanical fractures may occur under the action of operational loads in the future. According to the calculation results, the areas located above the wheelsets of the locomotive turned out to be the most stressed zones. Static stresses in these zones reach 79.853 MPa, which is 26.617 MPa higher than the average values.

The maximum value of frame deformation under load was 2.206 mm. The frame end beams are the most subject to deformations, which can further lead to fatigue failure under cyclic loads.

Further, a similar calculation of stresses and material displacement in the frame of TEP70BS locomotive bogie under the static load, but with the change of steel grade. As the investigated steel grade, as indicated above, we choose 30KhNML steel. This steel is used for making responsible loaded details, which have requirements of high strength and sufficient toughness, working under the action of static and dynamic loads.

The results of calculation of stress values in the locomotive frame when using 30KhNML steel grade under static load are shown in Fig. 3.

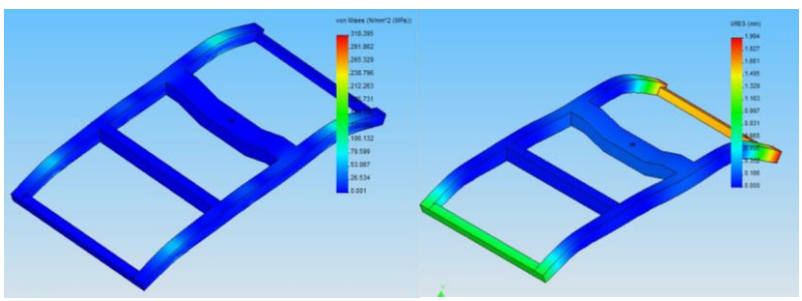

Fig. 3. Stresses and deformations in the frame of locomotive bogie under static load when using 30KhNML steel.

When comparing the calculation results when using 20GFL and 30KhNML steel, it can be found that the maximum displacement of the metal frame under load in the case of steel grade 20GFL is 2.206 mm. When using steel grade 30KhNML displacement of the metal frame is 1.994 mm. From the obtained diagrams we can see that the frame of TEP70BS

locomotive bogie when it is made of 30KhNML alloy steel is less exposed to deformation, which will further reduce the fatigue wear under the action of cyclic loads, thus the remaining service life of the bogie frame will be extended.

3 Conclusion

Based on the analysis of the results obtained in the modeling of the tense-strain state of the passenger locomotive bogie frame, the following conclusions can be made:

1. The finite element method is an effective numerical method for solving physical problems related to determining the tense-strain state of complex rolling stock structures. High accuracy and clarity of the method allows to use the obtained results in designing, manufacturing and modernization of modern rolling stock.
2. Widespread use of computer-aided design systems when creating solid models of units and assemblies of locomotives and cars makes it possible to reduce costs for full-scale test methods, to identify in advance the areas prone to high stress concentration, as well as to develop solutions to eliminate the most frequent malfunctions in operation.
3. Application of modern structural materials during manufacturing and modernization of already existing assemblies and parts of traction rolling stock will allow to significantly increase reliability of load-bearing elements, as well as reduce the probability of sudden failures in operation.

Reference

1. Y. Ruzmetov, N. Adilov, S. Sultonov, E3S Web of Conferences **264**, 05021 (2021)
2. S.I. Gubenko, I.A.Ivanov, D.P. Kononov, Steel in Translation **51(6)**, 400-415 (2021)
3. Y. Boronenko, R. Rahimov, Transport Problems **16(3)**, 199-211 (2021)
4. A. Orlova, T. Titova, Vehicle System Dynamics **59(7)**, 1148-1169 (2021)
5. V. Gordienko, S. Repin, A. Vorobiev, A. Abrosimova, Architecture and Engineering **6(2)**, 70-76 (2021)