Dynamic modes of the phase number converter based on lc circuits with a common magnetic circuit

Laziz Bazarov[1], *Ivan* Bedritsky[1], *Durdona* Toshpulatova[2], *Kamila* Jurayeva[1*], and *Zamira* Nazirova[1]

[1]Tashkent State Transport University, pass. 1st Temiryulchilar, 1, 100167 Tashkent, Uzbekistan
[2]Tashkent State Pedagogical University, Bunyodkor avenue, 27, 100070 Tashkent Uzbekistan

Abstract. Phase multipliers are used in electronic equipment devices when it is not possible to connect to a power source with the required number of phases. Phase multipliers, which are used in single-phase circuits for powering three-phase consumers, have received the greatest application. From the point of view of circuitry, the simplest are multipliers of the number of phases based on nonlinear LC circuits, which have high reliability and relatively small dimensions when powering devices of low and medium power. However, phase multipliers based on LC circuits made on a common magnetic core have degraded dynamic characteristics due to the presence of magnetic bonds between phase-shifting circuits.

1 Introduction

The paper investigates the dynamic properties of the phase number converter under characteristic dynamic influences – switching on the device at idle, switching on the load, a sharp change in the load mode and switching on a short circuit. It is concluded that from the point of view of the duration of transients, the proposed circuit is suitable for the development of real frequency multipliers of low and medium power.

Parametric multipliers of the number of phases are used to power automation devices, electronic equipment, communications and electrotechnological devices in cases where there are no multiphase circuits nearby or their use meets technical or economic difficulties [1-9]. The most common devices of this type are phase multipliers, which are used in single-phase circuits to power three-phase consumers.

2 Methods

The simplest from the point of view of circuitry are phase multipliers based on nonlinear LC circuits [10-16], which have high reliability and relatively small dimensions when powering devices of low and medium power.

* Corresponding author: lade00@bk.ru

However, phase multipliers based on LC circuits made on a common magnetic core have degraded dynamic characteristics due to the presence of magnetic bonds between phase-shifting circuits. For this reason, the study of dynamic modes caused by abrupt changes in parameters (switching) from the point of view of the suitability of the LC circuit for real use in phase number converters is of considerable scientific interest.

Consider a parametric multiplier of the number of phases according to the scheme in Figure 1 [17], where – S_1, S_2, S_3 cross-sectional areas of rods; L_1, L_2, L_3 - average lengths of magnetic lines; ϕ_1, ϕ_2, ϕ_3 - instantaneous values of magnetic fluxes in the rods of the magnetic circuit; g_1, g_2 - active conductivities of primary windings W_1, W_2 - the number of turns of primary windings; i_1, i_2 - instantaneous current values in the primary windings; i_{g1}, i_{g2} - instantaneous current values in the conductivities of primary windings; C_1, C_2 - capacitors connected in parallel to the primary windings; i_{c1}, i_{c2} - instantaneous current values in capacitors; $i = I_m \cdot sin(\omega t + \psi_i)$ - instantaneous value of the supply current, in the first approximation taken sinusoidal; $u = U_m \cdot sin(\omega t + \psi_u)$ - instantaneous value of the supply voltage; W_3, W_4, W_5 - the number of turns of the secondary windings of the multiplier; $A, B, C, 0$ - respectively, the conclusions of the beginning of the artificial phases of the multiplier and the zero point; Z_A, Z_B, Z_C - phase loads; U_A, U_B, U_C - phase voltages.

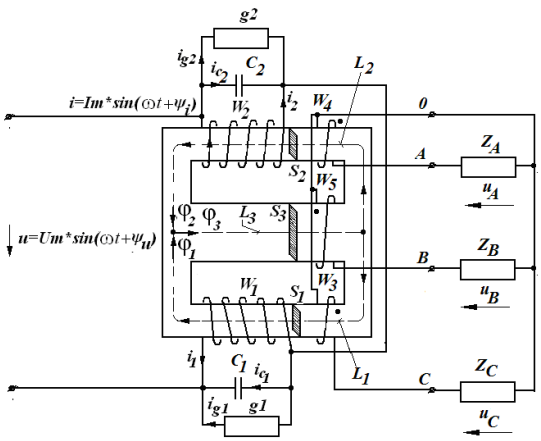

Fig. 1. Diagram of the phase number converter.

Taking into account the approximation of the magnetization curve $H = k \cdot b^9$ for instantaneous values of induction and tension [18], after some transformations, this scheme will be described by a system of equations where the instantaneous values of currents in the branches of the circuit can be found through instantaneous inductions from the expressions (1)

$$\begin{cases} b_1 \cdot S_1 + b_2 \cdot S_2 - b_3 \cdot S_3 = 0 \\ {b_1}^9 = \frac{k \cdot L_2 \cdot {b_2}^9 - i_2 \cdot W_2 + i_1 \cdot W_1}{k \cdot L_1} \\ u = W_1 \cdot S_1 \frac{db_1}{dt} + W_2 \cdot S_2 \frac{db_2}{dt} \\ i = i_2 + i_C + i_{g2} \\ i = i_1 + i_{g1} \end{cases} \quad (1)$$

$$i_2 = \frac{k \cdot L_2 \cdot b_2^9}{W_2}; i_C = W_2 \cdot C \cdot S_2 \cdot \frac{d_2 b_2}{dt^2}; i_{g2} = W_2 \cdot g_2 \cdot S_2 \frac{db_2}{dt}; i_1 = \frac{k \cdot L_1 \cdot {b_1}^9}{W_1}$$

$$i_{g1} = W_1 \cdot g_1 \cdot S_1 \cdot \frac{db_1}{dt}. \quad (2)$$

In this simplified model of the phase multiplier, the core magnetization characteristic model in the form of a hysteresis loop [19, 20] is not used, since the extreme rods of the

magnetic circuit operate in a mode close to saturation, and the width of the hysteresis loop is close to zero.

Let's transform the system (1), for which we will replace the variables

$$\frac{db_2}{dt} = F; \ \frac{d_2 b_2}{dt^2} = \frac{dF}{dt}. \quad (3)$$

We express it through the resulting expression $\frac{dF}{dt}$ and after the transformation we get

$$\frac{dF}{dt} = b_1^9(1 + \frac{W_1}{W_2}) - b_2^9\left(\frac{L_2}{L_1} + \frac{W_1 \cdot L_2}{W_2 + L_1}\right) + \frac{db_1}{dt}\left(\frac{W_1' \cdot W_2 \cdot g_1 \cdot S_1 + W_1^2 \cdot g_1 \cdot S_1}{k \cdot L_1}\right) - \\ -F\left(\frac{g_2 \cdot S_2 \cdot W_2^2 + W_1 \cdot W_2 \cdot g_2 \cdot S_2}{k \cdot L_1}\right). \quad (4)$$

We express $\frac{db_1}{dt}$ in accordance with (1), we get

$$\frac{db_1}{dt} = \frac{u - W_2 \cdot S_2 \cdot F}{W_1 \cdot S_1} \quad (5)$$

Let 's introduce the notation:

$$A = W_2 \cdot S_2; B = W_1 \cdot S_1; \rightleftarrows\rightleftarrows\rightleftarrows\rightleftarrows\rightleftarrows D = 1 + \frac{W_2}{W_1}; K = \frac{L_2}{L_1} + \frac{W_1 \cdot L_2}{W_2 \cdot L_1};$$
$$L = \frac{W_1 \cdot W_2 g_1 \cdot S_1 + W_1^2 \cdot g_1 \cdot S_1}{k \cdot L_1}; \ M = \frac{W_2^2 \cdot g_2 \cdot S_2 + W_1 \cdot W_2 \cdot g_2 \cdot S_2}{k \cdot L_1};$$
$$N = \frac{W_2^2 \cdot C \cdot S_2 + W_1 \cdot W_2 \cdot C \cdot S_2}{k \cdot L_1}.$$

Taking into account the accepted notation, we obtain the expression for $\frac{dF}{dt}$

$$\frac{dF}{dt} = \frac{b_1^9 \cdot D - b_2^9 \cdot k + \left(\frac{u - A \cdot F}{D} \cdot L\right) - F \cdot M}{N}. \quad (6)$$

Given that $u = U_m \cdot sin(\omega t + \psi_u)$, expression (1) is converted to the form

$$\left\{\begin{array}{l} \frac{db_1}{dt} = \frac{U_m sin(\omega t + \psi_u) - A \cdot F}{B} \\ \frac{dF}{dt} = \frac{b_1^9 \cdot D - b_2^9 \cdot K + \frac{U_m sin(\omega t + \psi_u) - A \cdot F}{B} \cdot L - F \cdot M}{N} \\ \frac{db_2}{dt} = F \end{array}\right\} \quad (7)$$

We use this system as a basis for studying the dynamic modes of operation of the parametric multiplier of the number of phases.

3 Results and discussion

The solution of system (7) will be the induction functions b_1, b_2, the induction in the middle rod is the sum of the inductions in the extreme rods of the magnetic circuit, that is, $b_3 = b_1 + b_2$, however, using expressions (2) it is easy to move from them to currents in the branches of the circuit, and using the expression $u = \frac{d\Phi}{dt} W = \frac{db}{dt}(SW)$, where S, W, respectively, the section of the magnetic circuit and the number of turns on its core, to the voltages in its

sections. The numerical solution of system (1) was found by the fourth-order Runge-Kutta method [21,22].

Let's consider the calculation of transients using the example of the physical model of the circuit under study according to the application and find the values of the coefficients: $A = 0.34$; $B = 0.34$; $D = 2$; $K = 2$; $L = 0.113$; $N = 0.00146$. The coefficient M depends on the magnitude of g_2 (that is, the load) and will be determined specifically for each of the types of transients.

Consider turning on the circuit at idle, at idle $g_2 = g_1 = 0.0015\Omega^{-1}$; $M = 0.101$; $b_1(0) = 0$; $b_2(0) = 0$; $F(0) = 0$. Graphs of transients are shown in Figure 2, a (the circuit turns on when the voltage u passes through zero, $\psi_u = 0$ and in Figure 2, b (the circuit turns on at maximum voltage and phase shift $\psi_u = \pi/2$.

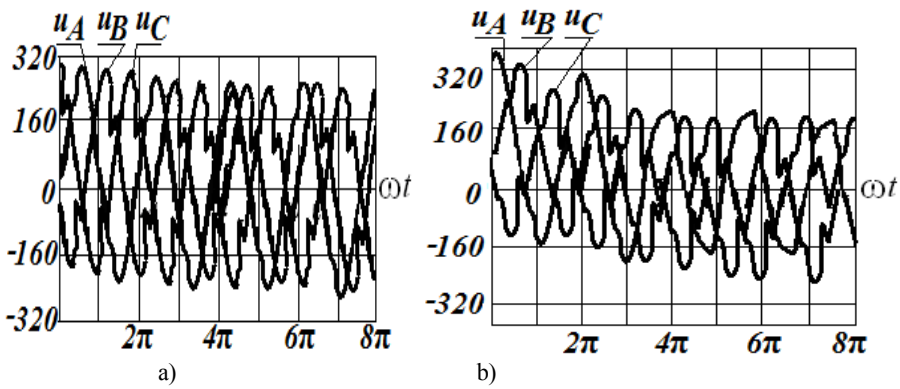

Fig. 2. Transients when switching on a parametric phase number converter based on nonlinear LC circuits with magnetic connections at idle.

It can be seen from the graphs that $\psi_u = 0$, transients in the circuit fade out during 1-2 periods of the fundamental frequency, and $\psi_u = \pi/2$ – during 4 periods. The graphs in Figure 2 reflect the course of the curves $U_A, U_B, U_C = f(t)$, but lag behind in phase by the angle $\phi = \pi/2$, since according to (1) they are proportional $\frac{db_1}{dt}, \frac{db_2}{dt}, \frac{db_3}{dt} = \frac{d(b_1+b_2)}{dt}$. Thus, in the circuit under the most unfavorable regime with $\phi = \pi/2$, transients fade out quite quickly.

Switching on the circuit to the load. At a load close to the nominal ($g_2 = 0.05\Omega^{-1}$) coefficient $M = 3.364$, the initial conditions are zero. The curves of transients $\psi_u = 0$ and $\psi_u = \pi/2$ are shown respectively in Fig. 3, a, b.

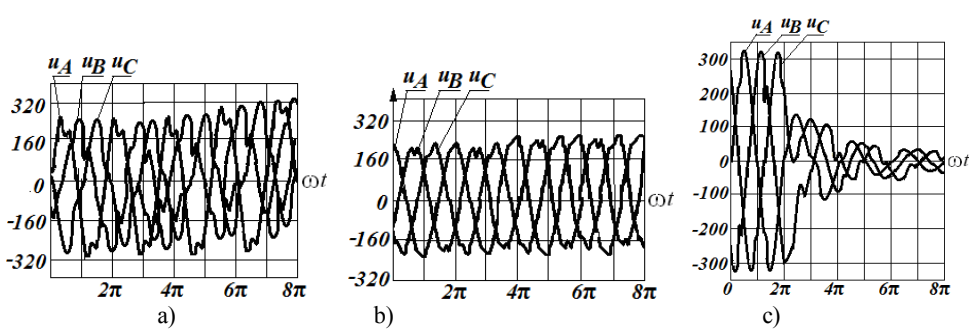

Fig. 3. Transients when switching on a parametric converter of the number of phases with magnetic connections for load and short circuit.

It can be seen from the graphs that connecting the load leads to an acceleration of transients and at the worst mode ($\psi_u = \pi/2$) it is pumped in two periods of supply voltage fluctuations. Fig. 3, c also shows that switching on the device for short circuits causes transients that end in two periods of the fundamental frequency.

Enabling and disabling the load. The calculation was carried out for the most unfavorable conditions $\phi = \pi/2$. The initial conditions for the process of switching on the load (g_2 changes by a jump from a value of 0.0015 to a value of 0.05 Ω^{-1}) and were determined by calculating the steady-state mode at idle. At the same time, $M = 0.101$; $b_1(0) = 0.82$; $b_2(0) = 1.71$; $F(0) = -2.1$. The calculated curves are shown in Fig. 4, a. From the curves it can be seen that the transient process is completed in 1.5 periods of the fundamental frequency.

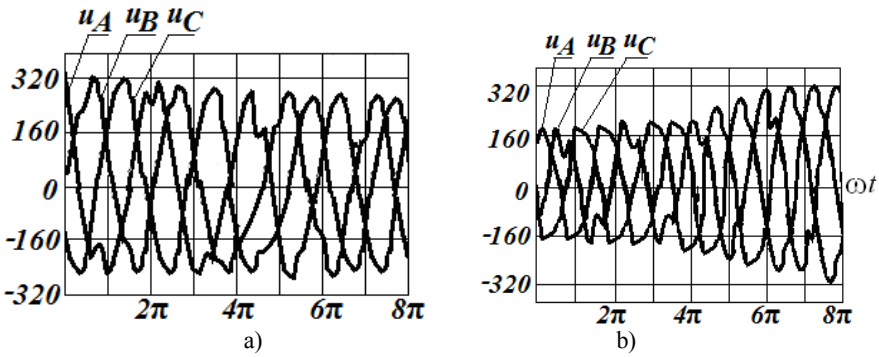

Fig. 4. Transients when switching on and off the load in a parametric phase number converter with magnetic connections.

The initial conditions for the study of transients during load shutdown (g_2 changes by a jump from a value of 0.0015 to a value of 0.05 Ω^{-1}) g2 changes by were determined from the steady state of the loaded circuit. At the same time, $M = 3.364$; $b_1(0) = 0.82$; $b_2(0) = 1.71$; $F(0) = -2.1$. The calculated curves are shown in Figure 4, b. From the curves it can be seen that when the load is switched off, the transient process is longer and is about four periods.

4 Conclusion

1. Transients in a parametric phase number converter during load activation or short-circuit activation have a shorter duration (the transition time is 1.5-2 periods of the fundamental frequency) than transients associated with abrupt load reductions or idling (the transition time is 3.5-4 periods of the fundamental frequency).

2. Abrupt changes in the modes of the parametric phase number converter on nonlinear LC elements with a common magnetic circuit practically do not affect the operating mode of the device, therefore, the circuit can be used as a phase number converter for operation in modes with sharply variable load.

References

1. R. Machado, S. Buso, J. Pomilio, *A Line-Interactive Single-Phase to Three-Phase Converter System,* in Proc.IEEE 35th Annu. Power Electronics Specialists Conf., PESC '04, **vol.1** (2004)

2. M. Bellar, M. Aredes, J. Silva Neto, L. Rolim, F. Aquino, V. Peteraen, *Comparative Analysis of Single-Phase to Three-Phase Converters for Rural Electrification,* in Proc. IEEE International Synposium on Industrial Electronics, ISIE '04, **vol. 2** (2004)
3. H. Douglas, M. Malengret, *Symmetrical PWM with a Split-capacitor Single-phase to Three-phase converter for rural electrification,* in Proc. IEEE International Sympos ium on Industrial Electronics, ISIE '98, **vol. 1** (1998)
4. J. Dias, E. dos Santos, C. Jacobina, *A Low Investment Single-phase to Three-phase Converter Operating with Reduce Losses,* in Applied Power Electronics Conf. and Exposition (APEC), 25th Annu. IEEE (2010)
5. J. Nesbitt, C. Chen, D.M. Divan, D.W. Novotny, *A novel single Phase to three phase converter,* in Proc.IEEE 6th Annu. Applied Power electronics Conf. and Exhibition, APEC '91 (1991)
6. L.E. Roginskaya, A.S. Gorbunov, Modern trends in the development of science and technology **9-2,** 24-26 (2016)
7. L.E. Roginskaya, A.S. Gorbunov, Bulletin of scient. conf. **2-1(18),** 106-108 (2017)
8. L.E. Roginskaya, A.S. Gorbunov, Bulletin of Modern Res. **9.1(24),** 197-199 (2018)
9. L.E. Roginskaya, A.S. Gorbunov, Bulletin of scient. conf. **9-3(25),** 170-172 (2017)
10. M.A. Ermilov, Yu.M. Kuprianovich, B.B. Alyakrinsky, RF Patent No. 2255411. A device for converting electrical energy of three- and single-phase voltages and currents (variants) N01F 30/14 (2006)
11. M.L. Strupinsky, V.M. Yesekhin, RF Patent No. 2290739 Device for powering single-phase active-resistive loads, ensuring the symmetry of the primary three-phase network N02M 5/14 (2005)
12. M.A. Yundin, A.S. Belokonov, K.M. Yudin, RF Patent No. 58816. Converter of single-phase voltage to three-phase N02M 54/14 (2005)
13. V.D. Vasilenko, V.V. Evdokimov, RF Patent No. 2321133. Symmetrical three-phase-single-phase voltage transformer N02J 3/26// (2008)
14. V.D. Vasilenko, RF Patent No. 2674753. Device for uniform distribution of single-phase load across the phases of a three-phase network N02M 5/00 (2016)
15. I.M. Bedritskiy, K.K. Juraeva, L.H. Bazarov, S.S. Saidvaliev, Jour. of Adv. Res. in Dynamical & Control Syst. **12(06),** 98-107 (2020)
16. I.M. Bedritskiy, K.K. Juraeva, L.H. Bazarov, *Evaluation of the stability of the parametric phase number converter,* International Scientific Seminar. Yu.N. Rudenko (Kazan, 2020)
17. I.M. Bedritskiy, Proceedings of higher educational institutions. Electro mechanics **6,** 39-42 (2011)
18. D. Jiles, D. Atherton, J. of Magnetism and Magnetic Mat., pp.48-60 (1986)
19. J.H. Chan, A. Vladimirescu, X.-Ch. Gao, P. Liebmann, J. Valainis, Transactions on Computer-Aided Design **4,** 10 (1991)
20. E.A. Kurbatova, MATLAB7. Tutorial (M.: "Williams", 2006)
21. I.V. Chernykh, Modeling of electrical devices in MATLAB (SimPowerSystems and Simulink, 2007)