Study of a unified work process of internal combustion engines

Zakirjon Musabekov[1*], *Sardor* Boymurotov[1], *Mukhriddin* Normatov[2], *Alisher* Askarov[1], and *Sarvar* Shukurulloyev[1]

[1]Tashkent State Technical University named after Islam Karimov, Street University, 2A, 100095 Tashkent, Uzbekistan
[2]Tashkent State Pedagogical University, Bunyodkor avenue, 27, 100070 Tashkent Uzbekistan

Abstract. Gasoline engines are characterized by high power density and low fuel efficiency. Diesels, on the contrary, have high fuel efficiency, but low specific power. A promising (unified) workflow should combine the best qualities of gasoline engines and diesel engines and work on the entire existing range of fuels produced for them. This will make it possible to switch to a single unified fuel, including fractions of modern commercial fuels, which will significantly reduce the energy intensity and cost of their production.

1 Introduction

To achieve fuel efficiency of diesel engines, gasoline engines need to raise the compression ratio to the level of 12–15 and switch to high-quality power control, i.e., increase the maximum excess air ratio at partial loads to values typical for diesel engines (4–5) [1]. Gasoline engines have a homogeneous mixture already prepared by the time of ignition. This condition imposes a limitation on the maximum compression ratio, since detonation occurs in homogeneous mixtures at increased compression ratios. Engines with processes such as the May Fireball, Mitsubishi GDI and others have approached the lower end of the above range of compression ratios only when using high-octane fuels.

Diesels allow for a multi-fuel cycle at high compression ratios. Increased values of the maximum pressure and rigidity of the combustion cycle at high compression ratios determine high loads on the parts of the cylinder-piston group, which leads to an increase in mechanical losses and requires a more robust engine design. When using fuels with low cetane numbers (for example, gasoline), these phenomena increase, so the operating time of a diesel engine on reserve fuels, according to technical conditions, does not exceed 10% of the total engine life. Reducing the compression ratio in diesel engines to a level of 12–15 would make it possible to reduce the mass and dimensions of the engine without increasing fuel consumption [2, 3]. However, in a conventional diesel engine, reducing the compression ratio to less than 15 leads to poor mixture formation and combustion, as well as a starting problem.

* Corresponding author: zakirjonm@mail.ru

2 Method and methodology

Due to the restrictions on the maximum rotational speed and the minimum value of the excess air coefficient, diesel engines have a low liter power compared to spark-ignition piston ICEs. An increase in the liter capacity of a diesel engine to the level of gasoline engines is currently achieved mainly by supercharging and a slight increase in speed. At the same time, the weight and dimensions of the diesel engine remain quite large due to high compression ratios. Accordingly, the specific power remains relatively low and there is an overconsumption of materials for both engines and the units on which they are installed.

Fig. 1. Test stand 1 DS 541 N with balance dynamometer.

The solution of the above tasks puts forward a number of problems of mixture formation, ignition and combustion, which must be resolved in order to maintain the power and economic performance of the engine when switching from one fuel to another [1].

The works [4, 5] formulated a hypothesis about a possible way to implement a unified workflow. The process, according to this hypothesis, is implemented due to the injection of a fuel-rich air jet directly into the working chamber of the engine by a compressor-injector, which is ignited by a single spark discharge near its boundaries. This ensures the first stage of combustion, characteristic of a gasoline engine. As a result of the increase in pressure and temperature of the unburned part of the air-fuel mixture, due to the combustion of the part of the mixture ignited by the spark, in the second stage, multi-focal ignition and combustion occurs, which is characteristic of the diesel engine working process. In this case, the level of inhomogeneity of the air-fuel mixture should be such that, on the one hand, to exclude the possibility of detonation with an intensity close to the maximum, on the other hand, to ensure the maximum possible degree of use of the air available in the working chamber of the engine. It is probably possible to satisfy these contradictory requirements if the process is organized in such a way that concentration heterogeneity takes place at the local level, and the centers of local heterogeneity themselves are relatively evenly distributed over the volume of the combustion chamber. It is assumed that the formation of detonation waves in local centers is permissible if, in the process of propagation, they are weakened to such a level that does not pose a danger to the engine design and does not worsen its effective performance. The principles of organizing the processes of mixture formation and ignition, incorporated in the proposed workflow, should allow controlling the degree of inhomogeneity by controlling the moment when the enriched air-fuel mixture begins to be supplied to the working chamber and the moment of primary ignition by a spark. Self-ignition may not occur when using high-octane fuels, such as aqueous ethanol solutions. Compared to diesel engines, this workflow organization scheme has the following advantages:

1. The restrictions on the lower limit of the compression ratio, the upper limit of the crankshaft speed and the cetane number of the fuel, which are typical for diesel engines, are eliminated. In a unified workflow, unlike diesels, self-ignition is only a concomitant, but not an obligatory factor. Therefore, multi-fuel capability can be implemented at significantly lower compression ratios than in multi-fuel diesel engines, and engine parameters are not limited to relatively slow chemical processes that lead to self-ignition and strongly depend on the type of fuel, thermodynamic conditions in the working chamber, etc.

2. Conditions arise for softer (comparable to gasoline engines) combustion at the initial stage, which makes it possible to use mixtures that are more homogeneous than in diesel [5]. The absence of early self-ignition when operating on low-octane fuels is determined by lower compression ratios than in a diesel engine.

3. There is a certainty and controllability of the moment of ignition and it is easier to start the engine at negative temperatures.

The purpose of this work is an experimental study of the possibility of implementing multifuel in the optimal range of compression ratios (12–15), while maintaining the specific power of a gasoline engine when using various fuels.

On Fig. 2 shows a diagram of the constructive implementation of the proposed workflow [4, 5]. Fuel with a small amount of air enters the cavity of the compressor-injector 1, where the preliminary stage of mixture formation occurs - heating, crushing, mixing and partial evaporation of the fuel. Piston 5 of the compressor injector is driven by the engine crankshaft. On the compression stroke, due to the movement of the compressor-injector piston, an air-fuel flame 2 is injected into the engine working chamber, in which the air-fuel mixture (FA) is finally formed. The mixture is ignited by a spark discharge 3 from a spark plug at the periphery of the air-fuel flame. The compressor-injector is equipped with the necessary devices for dosing fuel 8 and air 9 depending on the working volume of the engine and its mode of operation. The ignition system has a traditional design and discharge parameters typical for modern gasoline engines. The geometric compression ratio in the serial version is 8.5. The choice of the engine was largely influenced by its high operating frequency range of operating cycles (2000–5500 cycles/s). On the one hand, this makes it possible to evaluate the possibility of eliminating the restriction on the maximum frequency of cycles, which is characteristic of diesel engines. Accordingly, the possibility of realizing a specific power close to gasoline engines when switching from one fuel to another will be determined. On the other hand, in order to avoid self-ignition of diesel fuel before spark ignition, which can occur when an engine with a high compression ratio is operated at low speeds, the fuel injection advance angle should not be significantly larger than the angle corresponding to diesel engines. But then, when fine-tuning a unified workflow, you will have to face the problems that are solved when fine-tuning the working processes of diesel engines. A large number of factors will need to be taken into account, such as injection and ignition timing, injection duration, the shape and size of the combustion chamber, its conformity to the shape and size of the air-fuel plume, etc. This is a long and laborious process.

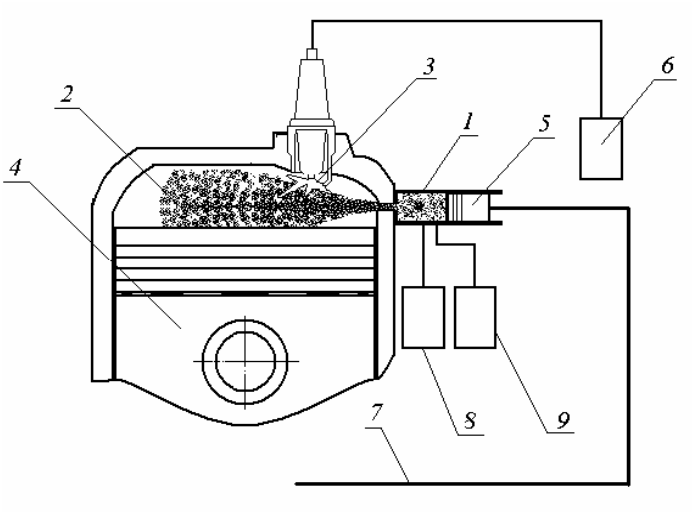

Fig. 2. Design scheme for the implementation of a unified workflow: 1 - compressor-injector; 2 – enriched FA torch; 3 – spark discharge; 4 - piston; 5 - compressor-injector piston; 6 - switch of the ignition system; 7 - compressor-injector drive from the engine shaft (conditionally); 8, 9 - fuel and air dosing devices for the compressor injector.

The intensity of turbulence in a reciprocating internal combustion engine increase in proportion to the crankshaft rotational speed, so the duration (in the angles of rotation of the crankshaft of the formation of fuel assemblies of the required level of inhomogeneity is practically independent of the rotational speed. In contrast, the duration of self-ignition induction at the angles of rotation of the crankshaft increases with increasing speed. This means that a high frequency of cycles makes it possible to obtain a fairly uniform distribution of fuel over the volume of the combustion chamber due to earlier injection advance angles and thereby avoid a long finishing process.

3 Discussion and results

In order to focus on intra-cylinder processes in the analysis of the results, the exhaust pipe was absent in the experiments. On the experimental engine, it is possible to control the compression ratio, the ignition and injection timing, and the location of the spark gap of the spark plug. In accordance with the results of a numerical experiment [2, 5], the compression ratio is taken equal to 12.5. According to these works, increasing the compression ratio above this value does not increase the effective efficiency of the engine. Gasoline and diesel fuel were used as fuel. Experimental studies were carried out on a test bench type 1 DS 541 N with a balancing dynamometer.

The test bench provides the ability to measure and stabilize the frequency and torque of the tested machines.

The experiments confirmed the possibility of implementing a multi-fuel working process in the operating frequency range of the cycles of the base engine. On fig. 2 shows the external speed characteristic of the engine at optimal injection and ignition advance angles, respectively, for diesel fuel, Normal 80 gasoline, as well as the carburetor version of the engine. The criterion for optimality in choosing the injection and ignition advance angle was the maximum engine power.

When the injection advance angle deviated from the optimal one, a decrease in engine power was observed. With a decrease - due to a deterioration in mixture formation, with an increase - due to detonation.

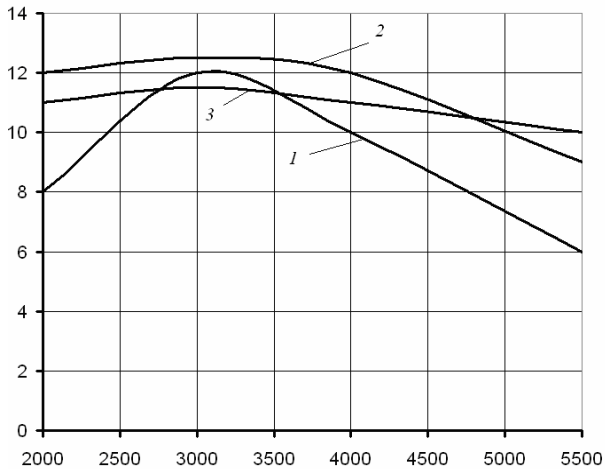

Fig 3. The maximum allowable injection advance angle in the case of using gasoline is greater. 1. External sp.eed characteristic of the engine: 1 - gasoline (carburetor version); 2 – gasoline (injection); 3 - diesel fuel.

The maximum allowable injection advance angle in the case of using gasoline is greater (Figure 3). This can be explained by the action of two factors. First, due to the lower octane number, the rate of reactions leading to ignition is higher in diesel fuel. Therefore, at equal SWPs, the fraction of fuel assemblies burnt out by the time of self-ignition is lower. According to [5], the smaller it is, the narrower the range of permissible burnout characteristics and, accordingly, the lower the permissible degree of mixture homogeneity even in the absence of detonation combustion. Secondly, different detonation resistance of the used air-fuel mixtures with the same degree of inhomogeneity. When detonation occurs, not only the absolute reaction rates are important, but also their temperature dependences, which are determined by the effective activation energy. The weaker these dependences, the more likely the simultaneous occurrence of self-ignition in large volumes of the mixture, despite the presence of temperature inhomogeneity in it [6, 7]. The effective activation energy of reactions leading to self-ignition is the higher, the higher the octane number of the fuel. Therefore, even with the same degree of heterogeneity, the reaction rate and the volume chemically prepared (multi-stage chemical transformations took place in the mixture) for a thermal explosion will be greater for diesel fuel. Also, the intensity of the propagating waves resulting from self-ignition will also be greater than that of gasoline. In this regard, the heterogeneity of the charge when operating on diesel fuel should be greater. As a result, the engine torque at low frequencies is reduced compared to gasoline.

With an increase in the rotational speed, the duration of self-ignition induction in the angles of rotation of the crankshaft increases, therefore, the proportion of the air-fuel mixture that has burned out by the time of self-ignition increases. According to [5], the higher it is, the wider the range of acceptable burnout characteristics. If the proportion of the mixture that has burned out by the time of self-ignition exceeds 50%, almost any type of burnout becomes acceptable, due to the fact that the maximum rate of pressure rise does not exceed the values realized in modern diesel engines. In this case, the coordinates of its maximum have a later

location in terms of the r.c.v. angle, and the absolute value of the pressure jump is much less than the values corresponding to diesels. This means that, unlike diesels, explosive combustion is permissible and the degree of homogeneity of the mixture will only limit the likelihood of detonation, which in turn makes it possible to use mixtures that are more homogeneous than in diesel.

Since with an increase in the frequency of cycles, it becomes possible to use more homogeneous mixtures, in order to increase the time for mixture formation, the injection advance angle was increased (Fig. 4). But in the case of using diesel fuel, an increase in speed above 4000 rpm. no longer causes an increase in the maximum permissible injection advance angle. This fact is associated with the occurrence of detonation caused by a decrease in the degree of mixture inhomogeneity in excess of a level determined for a given fuel, which manifested itself in the form of a characteristic sound and deterioration of engine performance.

At high rotational speeds, the positive effects of multifocal ignition and combustion appear. The development of pre-flame reactions in the unburned part and the occurrence of self-ignition centers contribute to the rapid completion of heat release at the end of the main combustion phase and in the afterburning phase. The lower the octane number of the fuel and the higher the cycle frequency, the more noticeable this effect [6]. This, apparently, explains the greater torque when the engine is running at high cycle frequencies in the case of using diesel fuel

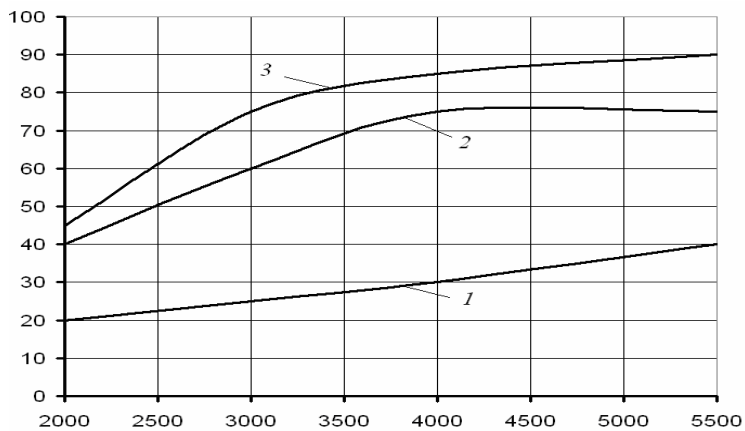

Fig. 4. Engine adjustment data: 1 - UOZ deg. PCV; 2 - UOV (diesel fuel) deg. PCV; 3 - UOV (gasoline) deg. PCV.

As already mentioned, a positive result will manifest itself as long as the shock waves that have arisen during multi-focal ignition have not yet developed into detonation waves of such intensity that degrades the engine's performance.

4 Conclusion

1. The possibility of implementing a multi-fuel without detonation working process at a compression ratio of 12, implemented by controlling the moment of the start of the enriched air-fuel mixture supply to the working chamber and the moment of primary ignition by a spark, has been experimentally confirmed.

2. It has been experimentally shown that there are no restrictions on the speed of rotation when the engine is running with the proposed working process on diesel fuel, at least up to the maximum allowable passport speed of the engine, equal to 5500 rpm. /min

3. The ability of the engine to operate at a compression ratio of 12 without restrictions on the maximum frequency of cycles determines the possibility of realizing a specific power close to gasoline engines when switching from one fuel to another.

Reference

1. B.S. Stechkin, Selected works: Theory of thermal engines (M.: Fizmatlit, 2001)
2. Z. Musabekov, J. Khakimov, E. Botir, E3S Web of Conf. **264,** 01003 (2021)
3. M.D. Garipov, R.Yu. Sakulin, Polzunovskiy Vestnik **4,** 54–57 (2006)
4. R.G. Phatak, K. Komiyama, SAE Techn. Pap. Ser. **830588,** 8 (1983)
5. S.M. Kadyrov, Z.E. Musabekov, A.M. Khakimov, Automobile industry **(11),** 30–31 (2005)
6. R.D. Enikeev, M.D. Garipov, Vestnik UGATU **7(3),** 12–22 (2006)
7. A.N. Voinov, Combustion in high-speed piston engines (M.: Mashinostroenie, 1977)
8. Yu.B. Sviridov, Mixture formation and combustion in diesel engines (L.: Mashinostroenie, 1972)
9. Z.E. Musabekov, N.Q.O. Ravshanov, Oriental renaissance: Innovative, educational, natural and social sciences **1.9,** 573-580 (2021)