Calculated model of a lubricant in a bearing with a non-standard support profile of a sleeve and a metal-coated shaft

Khaidar Abdurahman[1], *Murman* Mukutadze[1*], *Grigory* Badakhov[1], *Nikita* Zinoviev[1], and *Valentina* Shvedova[1]

[1]Rostov State Transport University, 2, Rostovskogo Strelkovogo Polka Narodnogo Opolcheniya sq., Rostov-on-Don, 344038, Russia

Abstract. In this work, on the basis of the flow equation of a truly viscous liquid, the continuity equation, and the equation describing the radius of the molten contour of the shaft coating, taking into account the dissipation rate of mechanical energy, an asymptotic and exact self-similar solution was found for the zero (without taking into account the melt) and the first (taking into account the melt) approximation of a radial bearing with a non-standard support profile adapted to friction conditions in hydrodynamic mode when the metal coating lubricates the shaft surface, taking into account the dependence of viscosity on pressure. An analytical dependence is obtained for the radius of the molten surface of the metal coating, as well as for the field of velocities and pressures at zero and first approximations. In addition, the main operating characteristics of the friction pair under consideration, the load capacity and the friction force are determined. The influence of the parameters characterizing the melt of the coating, the support profile adapted to the friction conditions, the dependence of the viscosity on the pressure on the load capacity and the friction force is estimated.

1 Introduction

A significant number of works are devoted to the development of a calculated model of radial plain bearings with a metal coating [1-9]. However, the process of lubrication on melts of coatings is not a self-sustaining process. To ensure a self-sustaining lubrication process for plain bearings, it becomes necessary not only to have a metal coating on one of the contact surfaces, but also a constant supply of lubricant, which can be provided with a constant supply of lubricant or a porous coating on the other contact surface [10-19], as well as non-standard support profile.

In the proposed work, to ensure a self-sustaining process and a hydrodynamic mode of the flow, a calculation model of a radial plain bearing with a non-standard support profile of the bearing sleeve and a metal coating of the shaft surface is given, taking into account the dependence of viscosity on pressure.

*Corresponding author: murman1963@yandex.ru

© The Authors, published by EDP Sciences. This is an open access article distributed under the terms of the Creative Commons Attribution License 4.0 (http://creativecommons.org/licenses/by/4.0/).

2 Method

Let us consider a laminar flow of an incompressible viscous liquid and a molten metal in the working gap of a radial bearing, taking into account the rheological properties. In this case, the shaft has a metal coating, and the sleeve is a non-standard support profile (Figure 1). The shaft rotates at a speed Ω, and the sleeve is stationary (Fig. 1).

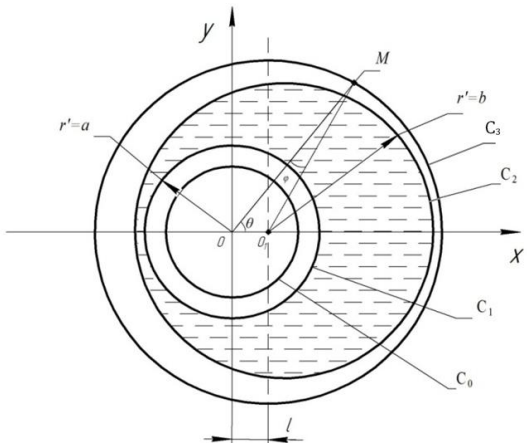

Fig. 1. Calculation model

We solve the problem in a coordinate system r', θ with a pole in the center of the shaft. The equations of the contours of: a shaft with a coating C_1; a shaft with a molten coating surface C_0; a bearing sleeve with a non-standard profile C_2; a bearing sleeve C_3 are presented:

$$C_1: r' = r_0, \quad C_0: r' = r_0 - \lambda' f(\theta),$$
$$C_2: r' = r_1(1+H) - a' \sin \omega \theta,$$
$$C_3: r' = r_1(1+H). \tag{1}$$

The dependence of viscosity on pressure is given as follows:

$$\mu' = \mu_0 e^{\tilde{\alpha} p'}. \tag{2}$$

In solving the problem, starting from the equation of motion of an incompressible liquid for a "thin layer" taking into account (2) both the equation of continuity and the equation describing the radius of the molten contour of the surface of the shaft, taking into account the dissipation rate of mechanical energy:

$$\frac{\partial p'}{\partial r'} = 0, \quad \mu' \frac{\partial^2 v_\theta}{\partial r'^2} = \frac{dp'}{d\theta}, \frac{\partial v_{r'}}{\partial r'} + \frac{v_{r'}}{r'} + \frac{1}{r'}\frac{\partial v_\theta}{\partial \theta} = 0,$$
$$\frac{d\lambda' f(\theta) r_0}{d\theta} \Omega L' = 2\mu' \int_{r_0 - \lambda' f(\theta)}^{r_1(1+H) - a' \sin \omega \theta} \left(\frac{\partial v_\theta}{\partial r'}\right)^2 dr', \tag{3}$$

The boundary conditions for the original equation (3), taking into account the generally accepted simplifications, are written in the form:

$$v_\theta = 0, v_{r'} = 0_{at} r' = r_1(1+H) - a' \sin \omega \theta = h'(\theta),$$
$$v_{r'} = 0, v_\theta = \Omega\left(r_0 - \lambda' f(\theta)\right) \text{ at } r' = r_0 - \lambda' f(\theta),$$
$$p'(0) = p'(2\pi) = p_g; \quad r_0 - \lambda' f(\theta) = h_0^* \text{ at } \theta = 0, \quad \theta = 2\pi. \tag{4}$$

The further solution of the problem is carried out in dimensionless variables, having previously performed the transition to them according to the formulae:

$$v_\theta = \Omega v\left(r_0 - \lambda' f(\theta)\right); \quad v_{r'} = \Omega\delta u, \quad p' = p^* p; \quad p^* = \frac{\mu_0 \Omega\left(r_0 - \lambda' f(\theta)\right)^2}{\delta^2},$$

$$\mu = \mu_0\mu,\ \tilde{\alpha} = \frac{\alpha}{p^*}, r' = \left(r_0 - \lambda' f(\theta)\right) + \delta r, \quad \delta = r_1\left(r_0 - \lambda' f(\theta)\right). \tag{5}$$

Then, taking into account (4), the system equation (3)-(4) will take the form:

$$\frac{\partial p}{\partial r} = 0; \qquad \frac{\partial^2 v}{\partial r^2} = \mathrm{e}^{-\alpha p}\frac{dp}{d\theta}; \frac{\partial u}{\partial r} + \frac{\partial v}{\partial \theta} = 0;$$
$$\frac{d\lambda' f(\theta)}{d\theta} = -Ke^{-\alpha p}\int_{-\Phi(\theta)}^{h(\theta)}\left(\frac{\partial v}{\partial r}\right)^2 dr, \tag{6}$$

Where $K = \frac{2\mu_0\Omega\left(r_0 - \lambda' f(\theta)\right)}{L'\delta}$; $\quad \eta = \frac{e}{\delta}$; $\quad \eta_1 = \frac{a'}{\delta}$; $\quad \Phi(\theta) = r_0 - \lambda' f(\theta)$,

$$u = 0, \quad v = 1 \text{at} r = r_0 - \lambda' f(\theta),$$
$$u = 0, v = 0_{\text{at}} r = 1 + \eta\cos\theta - \eta_1 \sin\omega\theta = h(\theta),$$
$$p(0) = p(2\pi) = \frac{p_g}{p^*}. \tag{7}$$

For a further solution, we introduce the notation $z = e^{-\alpha p}$. We differentiate this equality, substitute the resulting equality (6)-(7) as a result, we obtain

$$\frac{\partial^2 v}{\partial r^2} = -\frac{1}{\alpha}\frac{dz}{d\theta}; \quad \frac{\partial u}{\partial r} + \frac{\partial v}{\partial \theta} = 0,$$
$$z\frac{d\Phi(\theta)}{d\theta} = -K\int_0^{h(\theta)}\left(\frac{\partial v_0}{\partial r}\right)^2 dr, \tag{8}$$
$$v = 0, u = 0_{\text{при}} r = 1 + \eta\cos\theta - \eta_1 \sin\omega\theta = h(\theta); \tag{9}$$
$$v = 1, u = 0 \text{at } r = r_0 - \Phi(\theta), \quad z(0) = z(2\pi) = e^{-\alpha\frac{p_g}{p^*}}.$$

Taking into account the generalized thermal parameter *K*, which characterizes the melt of the coating, we decompose the function $\Phi(\theta)$ by this parameter in the form:

$$\Phi(\theta) = -K\Phi_1(\theta) - K^2\Phi_2(\theta) - K^3\Phi_3(\theta) - \ldots \tag{10}$$

On the contour$r = -\Phi(\theta)$, the boundary conditions are presented in the form:

$$v\left(0 - H(\theta)\right) = v(0) - \left(\frac{\partial v}{\partial r}\right)\Big|_{r=0} \cdot H(\theta) - \left(\frac{\partial^2 v}{\partial r^2}\right)\Big|_{r=0} \cdot H^2(\theta) - \ldots = 0;$$
$$u\left(0 - H(\theta)\right) = u(0) - \left(\frac{\partial u}{\partial r}\right)\Big|_{r=0} \cdot H(\theta) - \left(\frac{\partial^2 u}{\partial r^2}\right)\Big|_{r=0} \cdot H^2(\theta) - \ldots = 0. \tag{11}$$

For system (8), we write down the asymptotic solution of the problem:

$$v = v_0(r,\theta) + Kv_1(r,\theta) + K^2 v_2(r,\theta) + \ldots,$$
$$u = u_0(r,\theta) + Ku_1(r,\theta) + K^2 u_2(r,\theta) + \ldots,$$
$$\Phi(\theta) = -K\Phi_1(\theta) - K^2\Phi_2(\theta) - K^3\Phi_3(\theta) - \ldots, \tag{12}$$
$$z(\theta) = z_0(\theta) + Kz_1(\theta) + K^2 z_2(\theta) + K^3 z_3(\theta) \ldots$$

Taking into account (12) in the system of equations (8) and (9), we obtain new systems of equations for the further solution of the problem:

– for zero approximation:

$$\frac{\partial^2 v_0}{\partial r^2} = \frac{dz_0}{d\theta}, \frac{\partial v_0}{\partial \theta} + \frac{\partial u_0}{\partial r} = 0, \tag{13}$$

$$v_0 = 0, u_0 = 0, \text{at} r = 1 + \eta \cos\theta - \eta_1 \sin\omega\theta,$$
$$v_0 = 1, u_0 = 0 \text{at} r = r_0 - \lambda' f(\theta) = 0,$$
$$z_0(0) = z_0(2\pi) = e^{-\alpha\frac{p_g}{p^*}}; \tag{14}$$

– for first approximation:

$$\frac{\partial^2 v_1}{\partial r^2} = \frac{dz_1}{d\theta}, \quad \frac{\partial v_1}{\partial \theta} + \frac{\partial u_1}{\partial r} = 0,$$
$$-z_0 \frac{d\Phi_1(\theta)}{d\theta} = K \int_0^{h(\theta)} \left(\frac{\partial v_0}{\partial r}\right)^2 dr, \tag{15}$$
$$v_1 = \left(\frac{\partial v_0}{\partial r}\right)\Big|_{r=0} \cdot \Phi_1(\theta), u_1 = \left(\frac{\partial u_0}{\partial r}\right)\Big|_{r=0} \cdot \Phi_1(\theta),$$
$$v_1 = 0, u_1 = 0 \text{at} r = h(\theta) + \tilde{\Phi},$$
$$z_1(0) = z_1(2\pi) = 0, \quad \Phi(0) = \Phi(2\pi) = h_0^*. \tag{16}$$

We seek for a self-similar solution without taking into account the melt in the following form:

$$v_0 = \frac{\partial \psi_0}{\partial r} + V_0(r,\theta), \quad u_0 = -\frac{\partial \psi_0}{\partial \theta} + U_0(r,\theta),$$
$$\psi_0(r,\theta) = \tilde{\psi}_0(\xi), \quad \xi = \frac{r}{h(\theta)}, \tag{17}$$
$$V_0(r,\theta) = \tilde{v}(\xi), \quad U_0(r,\theta) = -\tilde{u}_0(\xi) \cdot h'(\theta),$$
$$h(\theta) = 1 + \eta \cos\theta - \eta_1 \sin\omega\theta.$$

Substituting (17) into the system of equations (13) with boundary conditions (14), the solution of the zero approximation problem will have the form:

$$\tilde{\psi}_0''' = \tilde{C}_2, \tilde{v}_0'' = \tilde{C}_1, \quad u^{\tilde{}_0(\xi)\tilde{}_0(\xi)},$$
$$\frac{dz_0}{d\theta} = -\alpha\left(\frac{\tilde{C}_1}{h^2(\theta)} + \frac{\tilde{C}_2}{h^3(\theta)}\right), \tag{18}$$
$$\tilde{\psi}_0'(0) = 0, \tilde{\psi}_0'(1) = 0, \quad u^{\tilde{}_0(1)\tilde{}_0(1)},$$
$$\tilde{u}_0(0) = 0; \quad \tilde{v}_0(0) = 1; \quad \int_0^1 \tilde{v}_0(\xi)\, d\xi = 0. \tag{19}$$

Next, we integrate (18) - (19) and obtain the calculation formulae:

$$\tilde{\psi}_0'(\xi) = \frac{\tilde{C}_2}{2}(\xi^2 - \xi), \tilde{v}_0(\xi) = \tilde{C}_1 \frac{\xi^2}{2} - \left(1 + \frac{\tilde{C}_1}{2}\right)\xi + 1,$$
$$\tilde{C}_1 = 6. \tag{20}$$

Taking into account boundary conditions $z_0(0) = z_0(2\pi) = e^{-\alpha\frac{p_g}{p^*}}$ in equation n (18), as a result, we obtain the following expression:

$$\tilde{C}_2 = -6\left(1 + \frac{\eta_1}{2\pi\omega}(\cos 2\pi\omega - 1)\right). \tag{21}$$

Then for z_0 we obtain

$$z_0 = -6\alpha\left(\eta\, sin\,\theta + \frac{\eta_1}{\omega}(cos\,\omega\,\theta - 1) - \frac{\eta_1\theta}{2\pi\omega}(cos\,2\,\pi\omega - 1)\right) + e^{-\alpha\frac{p_g}{p^*}}. \quad (22)$$

Taking into account (20), we obtain an expression for finding $\Phi_1(\theta)$:

$$\frac{d\Phi_1(\theta)}{d\theta} = \frac{h(\theta)}{z_0}\int_0^{1\int^2}\left(\frac{\psi_0''(\xi)}{h^2(\theta)} + \frac{v^{7}{}_0(\xi)}{h(\theta)}()\right). \quad (23)$$

Integrating (23), we obtain a formula for determining the radius of the molten contour of the shaft

$$\Phi_1(\theta) = \frac{1}{\sup\limits_{\theta\in[0;2\pi]} z_0}\left[\theta - \eta\sin\theta - \frac{\eta_1}{\omega}\cos\omega\theta + h_0^*\right]; \quad (24)$$

$$\tilde{\Phi} = \sup_{\theta\in[0;2\pi]} \Phi_1(\theta). \quad (25)$$

For the first approximation, we look for a self-similar solution by analogy as for the zero approximation. As a result, we obtain calculation formulas for the field of velocities and pressures

$$\tilde{\psi}_1'''(\xi) = \tilde{\tilde{C}}_2, \quad \tilde{v}_1''(\xi) = \tilde{\tilde{C}}_1, \quad \tilde{u}_1'(\xi) - \xi\tilde{v}_1'(\xi) = 0,$$
$$\frac{dz_1}{d\theta} = -\alpha\left(\frac{\tilde{\tilde{C}}_1}{\left(h(\theta)+\tilde{\Phi}\right)^2} + \frac{\tilde{\tilde{C}}_2}{\left(h(\theta)+\tilde{\Phi}\right)^3}\right), \quad (26)$$
$$\tilde{\psi}_1(0) = 0, \quad \tilde{\psi}_1'(1) = 0, \quad \tilde{u}_1(1) = 0, \quad \tilde{v}_1(1) = 0,$$

$$\tilde{u}_1(0) = 0; \quad \tilde{v}_1(0) = M; \quad \int_0^1 \tilde{v}_1(\xi)\,d\xi = 0. \quad (27)$$

Integrating (26) - (27), we have:

$$\tilde{\psi}_1'(\xi) = \frac{\tilde{\tilde{C}}_2}{2}(\xi^2 - \xi), \tilde{v}_1(\xi) = \tilde{\tilde{C}}_1\frac{\xi^2}{2} + \left(\frac{\tilde{\tilde{C}}_1}{2} - M\right)\xi + M,$$
$$\tilde{\tilde{C}}_1 = 6M. \quad (28)$$

Using the boundary conditions: $z_1(0) = z_1(2\pi) = 0$ we have:

$$\tilde{\tilde{C}}_2 = -6M\left(1 + \frac{\eta_1}{2\pi\omega}(cos\,2\,\pi\omega - 1)\right)(1 + \tilde{\Phi}), \quad (29)$$

Where $M = \sup\limits_{\theta\in[0;2\pi]}\left(\frac{\partial v_0}{\partial r}\right)\Big|_{r=0} \cdot \Phi_1(\theta) =$

$$= \sup_{\theta\in[0;2\pi]}\left(-1 + 4\eta\, cos\,\theta + 2\eta_1\, sin\,\omega\,\theta + \frac{3\eta_1}{2\pi\omega}(cos\,2\,\pi\omega - 1)\right)\cdot\tilde{\Phi}$$

Taking into account (29), we obtain the equations for the hydrodynamic pressure (z_1) in the lubricating layer for the first approximation, that is, with the consideration of the melt:

$$z_1 = -6M\alpha\left[\frac{\left(\tilde{\eta}\, sin\,\theta + \frac{\tilde{\eta}_1}{\omega}(cos\,\omega\theta - 1) - \frac{\tilde{\eta}_1\theta}{2\pi\omega}(cos\,2\pi\omega - 1)\right)}{(1+\tilde{\Phi})^2}\right], \quad (30)$$

Where $\tilde{\eta} = \frac{\eta}{1+\tilde{\Phi}}, \quad \tilde{\eta}_1 = \frac{\eta_1}{1+\tilde{\Phi}}$.

As a result, for the hydrodynamic pressure, taking into account the zero and the first approximation$(z = z_0 + Kz_1)$, we obtain the following expression:

$$z = -6\alpha A + e^{-\alpha\frac{p_g}{p^*}} - 6KMB\alpha, \quad (31)$$

Where $A = -\left[\eta \sin\theta + \frac{\eta_1}{\omega}(\cos\omega\theta - 1) - \frac{\eta_1\theta}{2\pi\omega}(\cos 2\pi\omega - 1)\right]$,

$$B = \frac{\tilde{\eta}\sin\theta + \frac{\tilde{\eta}_1}{\omega}(\cos\omega\theta - 1) - \frac{\tilde{\eta}_1\theta}{2\pi\omega}(\cos 2\pi\omega - 1)}{(1+\tilde{\Phi})^2}.$$

Applying the well-known Taylor's expansion into series for the function $e^{-\alpha p}$ and $e^{-\alpha\frac{p_g}{p^*}}$, we obtain

$$p = \frac{p_g}{p^*} - 6(A + KMB)\left(1 + \alpha\frac{p_g}{p^*} - \frac{\alpha^2}{2}\left(\frac{p_g}{p^*}\right)^2\right). \quad (32)$$

Taking into account (13), (15) and (32) in solving the problem, we obtain the dependences for the component of a vector of the supporting force and the friction force, as a result it is formulated as follows:

$$R_x = p^* r \int_0^{2\pi} p\cos\theta\, d\theta = 0.$$

$$R_y = p^* r \int_0^{2\pi}\left(p - \frac{p_g}{p^*}\right)\sin\theta\, d\theta = \frac{6\mu_0\Omega r_0^3}{\delta^2}\left(1 + \alpha\frac{p_g}{p^*} - \frac{\alpha^2}{2}\left(\frac{p_g}{p^*}\right)^2\right)\times$$
$$\times\left[\eta\pi + \frac{\eta_1}{\pi\omega}(\cos 2\pi\omega - 1) - KM\left(\frac{\tilde{\eta}\pi + \frac{\tilde{\eta}_1}{\pi\omega}(\cos 2\pi\omega - 1)}{(1+\tilde{\Phi})^2}\right)\right].$$

$$L_{fr} = \mu\int_0^{2\pi}\left[\left.\frac{\partial v_0}{\partial r}\right|_{r=0} + K\left.\frac{\partial v_1}{\partial r}\right|_{r=0}\right]d\theta = \mu_0\left(1 - \alpha p + \frac{\alpha^2 p^2}{2}\right)\times$$
$$\times\left[-2\pi + \frac{\eta_1}{\omega}(\cos 2\pi\omega - 1) + K\left(2\pi - \frac{2\eta_1}{\omega}(\cos 2\pi\omega - 1)\right)\cdot\tilde{\Phi}\right]. \quad (33)$$

3 Conclusion

Based on the numerical analysis, Fig. 2 shows graphs of these dependencies.

The final stage of theoretical research was the numerical analysis which showed that the load-bearing capacity can be increased in the range of load-speed modes by 11-14%, while the coefficient of friction is reduced by 9-12%.

Experimental studies were conducted to verify and confirm effectiveness of the obtained theoretical models. In the first case, a metal coating was studied; in the second, an additional non-standard support profile of the bearing sleeve was studied. The results are presented in table 1. The studies were carried out on a friction machine on samples in the form of partial inserts. In the experimental study, a sliding support with a metal coating made of Wood alloy is considered. According to the results of experimental studies, the value of the coefficient of friction was determined, which allows us to judge the presence of a hydrodynamic friction mode when the bearing operates both with a lubricant having truly viscous rheological properties and with a melt of a metal coating. As well as the transition of the hydrodynamic mode of friction to boundary friction. The analysis of experimental studies shows that the melt of a metal coating affects the coefficient of friction more intensively than the rheological properties of the liquid lubricants used.

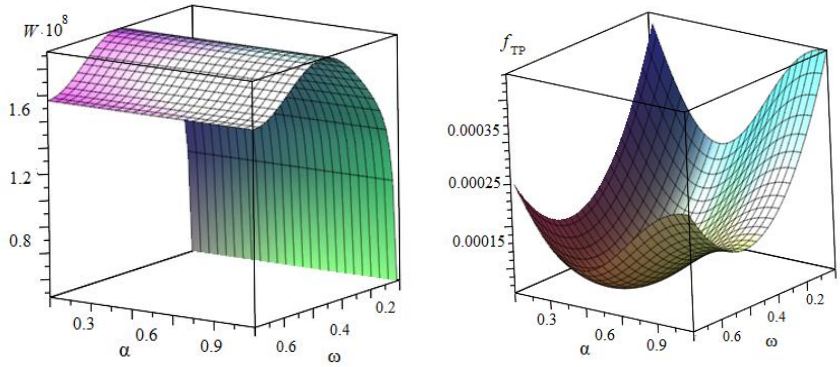

a) *b*)

Fig. 2. Influence of the parameters ω, characterizing the adapted profile, and α, characterizing the dependence of the viscosity, on the value: a) load capacity and b) friction force.

Table 1. Comparison of the results of theoretical and experimental studies.

№		**Theoretical studies**		**Experimental studies**
		without coating	**with coating**	**coated with Wood's alloy**
Coefficient of friction	1	0.0048	0.0023	0.0025
	2	0.0046	0.0022	0.0026
	3	0.0045	0.0021	0.0027
	4	0.0043	0.0024	0.002
	5	0.0042	0.0026	0.0027

As a result of the experimental studies, the tribotechnical characteristics are determined that allow us to judge the presence of the duration of a hydrodynamic friction mode and the reliability of theoretical studies.

The new multiparametric expressions are developed for the main performance characteristics (bearing capacity and friction force) of a radial plain bearing, taking into account the rheological properties of a truly viscous lubricant and the melt of a coating.

The influence of the parameters of variable factors caused by the melt of a coating is estimated.

The calculated ratios of the bearing capacity and the friction force have been developed, which allow adjusting the shaft coating and the profile of the bearing sleeve contour, taking into account the rheological properties of the lubricant and the melt of a coating.

The convergence of the results of theoretical calculated models and experimental studies allowed us to determine the area of prospective operation of the developed tribosystem.

4 Designations

r_0 – radius of the shaft with a fusible coating; r_1 – radius of the bearing sleeve; e – eccentricity; ε – relative eccentricity; $\lambda' f(\theta)$– function that determines the profile of the molten contour of the shaft coating; a' *and* ω – amplitude of the disturbance and parameter of the adapted profile of the sleeve, respectively, μ_0 – characteristic viscosity; μ' – coefficient of dynamic viscosity of the lubricant; p' – hydrodynamic pressure in the lubricating layer; $\tilde{\alpha}$ – constant,

v_θ, $v_{r'}$ – components of the velocity vector of the lubricating medium; p'– hydrodynamic pressure; L' – specific heat of fusion per unit volume.

References

1. H. Goto, S. Omori, Tribol. Trans. **43**, 57–65 (2000). https://doi.org/10.1080/10402000008982313
2. S.C Tjong, K.F. Tam, Mater. Chem. Phys. **97**, 91–97 (2006). https://doi.org/10.1016/j.matchemphys.2005.07.075
3. L. Ceschini, C. Bosi, A. Casagrande, G.L. Garagnani, Wear **251**(1–12), 1377–1385 (2001). https://doi.org/10.1016/S0043-1648(01)00782-7
4. F. Akhlaghi, A. Lajevardi, H.M. Maghanaki, J. Mater. Process Technol. **155–156**, 1874–1880 (2004). https://doi.org/10.1016/j.jmatprotec.2004.04.328
5. A.N. Opatskikh, S.A. Solop, I.A. Kolobov, IOP Conf. Ser.: Mat. Sci. and Eng., 012033 (2019)
6. L. Rajeshkumar, A. Saravanakumar, V. Bhuvaneswari, G. Gokul, Mater. Today Proc. **27**, 2645–2649 (2020). https://doi.org/10.1016/j.matpr.2019.11.087
7. S. Atla, K. Prasanna Lakshmi, TRIBOLOGIA – Finn. J. Tribol. **37**, 26–32 (2020)
8. M. Nagaral, V. Auradi, S.A. Kori, V. Hiremath, J. Mech. Eng. Sci. **3**(1), 4623–4635 (2019). https://doi.org/10.15282/jmes.13.1.2019.19.0389
9. A.N. Opatskikh, S.A. Solop, S.S. Chernyaev, Russian Eng. Res. **39**, 8 (2019)
10. C. Qian, K. Li, X.Y. Guo, B. Liu, Z.Y. Long, Y. Liu, J. Cent. South Univ. **27**, 1146–1157 (2020). https://doi.org/10.1007/s11771-020-4355-5
11. N. Raghumatham, E.K. Ioannidis, T. Sheppard, J. Mater. Sci. **26**, 985–992 (1991). https://doi.org/10.1007/BF00576776
12. E. Zadorozhnaya, S Sibiryakov, V. Hudyakov, Tribology in Industry **39**(4), 452-459 (2017). doi: 10.24874/ti.2017.39.04.04
13. I.V. Mukchortov, K.A. Pochkaylo, E.A Zadorozhnaya, Procedia Eng. **150**, 607-611 (2016). doi: 10.1016/j.proeng.2016.07.052
14. K.S. Akhverdiev, A.M. Mukutadze, Mech. Eng. Res. **6**(2), 1-10 (2016)
15. I.V. Kolesnikov, A.M. Mukutadze, V.V. Avilov, *Ways of Increasing Wear Resistance and Damping Properties of Radial Bearings with Forced Lubricant supply*, in Proceedings of the 4th International Conference on Industrial Engineering, Lecture Notes in Mechanical Engineering (ICIE 2018), 1049-1062 (2018)
16. A.M. Mukutadze, Procedia Eng. **150**, 547–558 (2016)
17. C.S. Ramesh, A.R. Anwar Khan, N. Ravikumar, P. Savanprabhu, Wear **259**, 602–608 (2005). https://doi.org/10.1016/j.wear.2005.02.115
18. R.G. Lakshmikantha, V. Auradi, Mater. Today Proc. **28**, 504–509 (2020). https://doi.org/10.1016/j.matpr.2019.12.209
19. K.S. Akhverdiev, N.S. Zadorozhnaya, A.M. Mukutadze, B.M. Flek, J. of Mach. Manuf. and Reliab. **45**(3), 247-251 (2016)