Magnetic fluid method for sealing liquid media

Alexander Bolotov[1*] and *Georgy* Burdo[1]

[1]Tver State Technical University, 22, A. Nikitin Emb., Tver, 170026, Russia

Abstract. Magnetic fluid seals for sealing gas environments are widely used in various industries due to their undeniable advantages. However, such seals are not capable of reliable sealing of liquid media with different polarities. The paper analyses physicochemical processes that lead to destructing magnetic fluid in a seal under the influence of a liquid medium in contact with it. There are results of experimental studies on sealing using magnetic seals of non-magnetic fluids with different polarity. The authors studied the tightness of a magnetic fluid seal capacity in contact with weakly polar liquids: MVP instrument oil, vaseline oil, and water as a highly polar liquid. For sealing water, the authors chose magnetic fluids with liquid siloxanes as the basis; they are immiscible with water and hydrophobic. Weakly polar liquids were sealed using magnetic fluid with a dispersion medium of triethanolamine, which is almost insoluble in hydrocarbon liquids and has a high dielectric permittivity and surface tension comparable in magnitude. It is established that magnetic fluid based on triethanolamine reliably seals the experimental bearing from penetrating of weakly polar liquids at an overpressure of 10 kPa and below. To seal polar liquid media, it seems promising to use oleophobic magnetic fluids based on PES-5, containing a large amount of filler in the form of ferrite particles. A magnetic fluid should have the smallest possible contact area with the sealed fluid and maintain a laminar flow regime.

1 Introduction

Magnetic fluids are a new functional material with a unique complex of physical and chemical properties. Magnetic fluid is a colloidal system of nanometer-sized ferromagnetic particles in suspension state in a carrier liquid, which is usually an organic solvent or water. To ensure the stability of such liquid, ferromagnetic particles are coated with a surfactant that forms a protective shell around the particles and prevents them from sticking together (due to the action of van der Waals or magnetic forces).

Nowadays, there are developed technologies for obtaining magnetic fluids with various bases - organosilicon (polyethylsilicate-40, PES-5, PMS-50, PMS-100, etc.), perfluoropolyethers, diesters, mineral and vacuum oils, epoxy and novolac resins, light hydrocarbons. The stabilizers are the following substances: fatty acids, natural naphthenic acids, synthetic naphthenic acids, synthetic petroleum acids, and others. With the exception of fatty acids, the listed substances have significantly more stable physicochemical

* Corresponding author: alnikbltov@rambler.ru

properties and do not have impurities that could adversely affect the stability of the magnetic fluids.

Magnetic fluids has found wide application in technical devices, such as various mechanical sensors, dampers, and magnetic bearings [1–3]. Nowadays, magnetic fluid seals (MFS) are widely used for operating in gas environment [4–5].

A magnetic fluid "plug" held by a magnetic field carries out sealing in such seals. MFS are widely used for sealing parts (shafts) of rotational and more complex types of motion, in technological processes that require maintaining a deep vacuum, in producing semiconductors, during sputtering, metallization, vacuum drying, in electron microscopes, vacuum furnaces, etc. In the US, there is a constant and strong industrial demand for magnetic fluid devices including magnetic fluid vacuum sealing systems. There are active developments on applying vacuum MFS in Japan, Germany,

France and Great Britain. In Russia, some research and training institutes are also working on this problem. The use of MF in the field of environmental conservation when spilling hazardous substances is especially in demand.

In engineering, stuffing box seals are widely used to seal various joints including rotating shafts. The main disadvantage of such seals is gland packing wear and the following loss of seal tightness.

The industrial use of MFS in Russia is still very limited despite their clear technical advantages compared to traditional seals. These advantages include: almost zero leakage of the sealed medium under given operating conditions; no shaft wear and low engine power losses due to purely fluid friction in the gap between moving and stationary elements; no need for lubrication; ease of maintenance; low operating costs. Magnetic fluid sealers remain operational in any spatial position, in static and dynamic modes, under conditions of variable and alternating pressures and vibration effects.

The advantages of MFS also include such unique properties as the ability of magnetic fluids to push out non-magnetic dust or moisture particles that enter the working gap of magnetic fluid sealers (Archimedes magnetic effect) and the ability to self-heal. The disadvantages of MFS include the limited operating temperature range, as well as epy problems associated with the destruction of the magnetic fluid colloidal structure in strong magnetic fields, the dispersion medium evaporation, and the high breakaway moment.

The use of magnetic fluid seals for sealing liquid media of various chemical properties discovers great technical prospects. However, despite the fact that the use of MFS for sealing rotating shafts in gaseous media and vacuum has found a fairly wide application in technology; their implementation for liquid media is hindered by a number of reasons that include: mechanical interaction of magnetic fluids with a medium to be sealed, which causes it to be washed out of the working gap of a magnetic fluid sealer and a sealant to fail to work; hydrodynamic interaction of a magnetic fluid due to the transition to the turbulent mode of operation; chemical interaction of a magnetic fluid with a compacted medium when it is conditionally aggressive [6-15].

Basically, the difficulties are associated with the rapid destruction of a magnetic sealing medium during seal operation, as well as with a lack of understanding of the theoretical issues of the interaction of a magnetic fluid with a sealed medium. Thus, the practical implementation of the problem of sealing liquid media using MFS turned out to be much more complicated and now specialists are trying to solve it.

For example, in [12], the author describes the tests on the effect of organic solvents of various chemical nature on the physical properties based on perfluoropolyether and polyethylsiloxane at room temperature and a contact time of 1 hour. The tests show that magnetic fluids based on polyethylsiloxane withstands only acetone action during the contact with organic solvents. In all other solvents, there is coagulation indicated by changes in all measured physicochemical characteristics (density, plastic viscosity,

magnetization, aggregative and kinetic stability). Magnetic fluids based on perfluoropolyether are resistant to hexane, chloroform, toluene, acetone, ethyl acetate. Experiments show that magnetic fluids cannot work for a long time in direct contact with aggressive media when exposed to temperatures of 150–200 °C.

In order to seal liquid media, a number of works [13] propose using a combined MFS, which allows combining the advantages of traditional and magnetic fluid seals. For example, an improved combined magnetic fluid seal has been studied. It can be used in pumping equipment used in the textile industry finishing works, as well as in the chemical industry. MFS and traditional stuffing box seal are combined into one formation that keeps magnetic fluid in a working gap. At the same time, magnetic fluid is also used as a lubricant for a mechanical seal. However, such seal is bulky and expensive.

The purpose of the research was a theoretical analysis of the reasons of a magnetic fluid destruction under the influence of a sealed fluid, as well as an experimental search for approaches to increase the durability of MFS operating in contact with a liquid medium.

2 Process analysis during the contact of magnetic and non-magnetic fluids

Let us analyze the main reasons leading to the destruction of a magnetic fluid "plug" under the action of a surrounding liquid medium, and then it will become the basis for identifying the requirements for a magnetic fluid composition and a seal design. The most obvious reason for losing MFS tightness is the erosion of a magnetic fluid by a sealed medium due to their mutual solubility. Therefore, a magnetic fluid must dissolve very slightly in a fluid being sealed and not enter into chemical interaction with it.

Mutual solubility of liquids is determined by the ratio of interaction energies of homogeneous and heterogeneous components of a solution. If the interaction energy of identical molecules is predominant, then the solubility is usually low. Typically, substances that are dissimilar in their physicochemical properties do not dissolve well in each other. It is possible to qualitatively predict the solubility of non-electrolytes based on the theory of J. Hildebrand.

According to this theory, the solubility of substances also decreases with an increase in the difference between their solubility parameters:

$$\rho=(E/V)^{0.5} \tag{1}$$

where E, V are the specific evaporation energy and the molar volume of a component respectively. The reference book edited by V.B. Kogan [16] presents the examples of calculating a solubility parameter.

It has been established empirically that mutual solubility of liquids most often decreases with an increase in the difference between dipole moments of their molecules. Considering that the orientational polarization makes the main contribution to the polarization of liquid dielectrics, their solubility can be judged qualitatively from the permittivity, which can be determined experimentally.

In the general case, the dissolution process can proceed spontaneously if the change in free energy is negative:

$$\Delta G \sim \Delta H - T\Delta S \tag{2}$$

where H is an enthalpy, T is a temperature, S is an entropy. In the considered systems of substances that slightly change their volume $\Delta U \sim \Delta H$, where U is an internal energy.

For magnetic fluids, a part of the internal energy is due to the magnetic dipole-dipole interaction of U_d particles. If a magnetic fluid is in a homogeneous magnetic field, then in the process of its dilution, the distance between the chains of particles will mainly change, and the distance between the particles in the chain will change insignificantly.

This is due to the action of repulsive forces between chains. As a result, when dissolving foreign molecules, the change in the magnetostatic interaction energy will be $\Delta U_d < 0$, which in turn will lead to a decrease in ΔU of the entire system.

The number of particle microstates will hardly change during dissolution due to the fact that the external magnetic field will continue to limit their mobility. Therefore, magnetic interaction almost does not affect $T\Delta S$ entropy factor value. It follows from the above, that the probability of forming a solution may slightly increase in an external uniform magnetic field.

The dissolution will proceed in an inhomogeneous magnetic field in a different way. The difference in the magnetic energy of particles in different volume parts leads to their redistribution according to the Stefan–Boltzmann law. When diluted, there will be an increase in the magnetic energy of the interaction of particles U_d due to the fact that particles will be forced to move to an area with a lower magnetic field strength. This will lead to an increase in ΔU of the system, and hence to a decrease in the probability of solution formation.

However, even if a sealing magnetic fluid and a sealed fluid are mutually insoluble, there is a risk of seal failure due to magnetic fluid surface degradation.

In our opinion, there might be two mechanisms of such destruction. The first mechanism manifests itself when the energy of a magnetic fluid adhesion to a sealed fluid is higher than the cohesive energy of a magnetic fluid. Under this condition, the formation of a solvent-gas film from a magnetic fluid on the interface surface is energetically favourable. The possibility of forming such film will cause a circulating sealing fluid to wash out magnetic fluid in a seal gradually. The greater the difference between the surface tension of contacting liquids, the higher the probability of this process.

When a magnetic fluid moves into an external homogeneous magnetic field, a magnetic moment acts on dispersed particles, which tends to orient them so that the magnetization vector coincides with the direction of field lines. In a magnetic fluid structured in this way, the interaction between particles is much higher than in an isotropic fluid, which has magnetic moments of the particles randomly scattered by thermal motion. Hence, it follows that the cohesive energy of the magnetic fluid in a magnetic field will be different. Depending on the field orientation with respect to the imaginary discontinuity surface, cohesion can be either higher or lower than without a field.

The cohesion work is higher with a normal field orientation, and it is lower with a tangential field orientation. It should be added that some action of a magnetic field occurs due to changing intermolecular interaction [15].

For a magnetic fluid located in a inhomogeneous magnetic field (for example, in a seal), film destruction is also hampered by the action of bulk magnetic forces, which somehow increase cohesion effective work.

Another mechanism of destructing a sealing magnetic fluid may be due to forming an emulsion from mutually insoluble sealed fluid and sealing magnetic fluid. The emulsifying a magnetic fluid from a seal into a sealed non-magnetic medium is a rather complex process that is difficult to describe analytically. However, some general patterns of this process have been established.

The stability of emulsions, and hence, the probability of their formation depends on the value of the interfacial surface tension: the lower it is, the higher the stability. To reduce the interfacial tension, there are emulsifying agents. Unfortunately, surfactants or dispersed particles contained in a magnetic fluid may perform their role well. An artificial increase in

the magnetic fluid surface tension will make it difficult to detach individual microparticles from its surface and will slow down the emulsification process.

Emulsification begins after a fluid flow ceases to be laminar and becomes turbulent. The resulting hydrodynamic instability of a magnetic fluid surface is accompanied by detachment of magnetic fluid particles and their entrainment by a sealed fluid.

The speed of the emulsification process depends on the following dimensionless criteria: P_1 / P_{1m}; H_1 / H_{1m}, where P_1, H_1 and P_{1m}, H_{1m} are the density and viscosity of the magnetic fluid and the one being sealed, respectively. We take a magnetic fluid density as equal to a conventional value, i.e.

$$P_{1m} = P_{o1m} + F_{1m} / g \tag{3}$$

where P_{o1m} is the density of a magnetic fluid as a complex substance, F_{1m} is the force acting on a magnetic fluid unit volume in the seal magnetic field, g is the acceleration of gravity. In turn,

$$F_{1m} \sim J\, H_m \tag{4}$$

where J is the magnetic fluid magnetization, H_m is the maximum field in a sealed gap.

With a decrease in the above criteria value, the probability of magnetic fluid emulsification decreases. Therefore, one should strive to increase magnetic fluid viscosity, its density and magnetization.

The emulsification process intensity increases with an increase in centrifugal forces acting on a magnetic fluid, that is, in proportion to the shaft rotation speed squared.

Of course, the emulsification process also depends on a specific design of a seal and its dimensions. A seal design must be such that there is a minimum contact area of a magnetic fluid and a sealing medium. In addition, the geometry of the gap to be sealed should contribute to the preservation of a laminar flow of fluids in contact with a magnetic fluid in a wide range of velocities.

To reduce the interaction of a magnetic fluid with a sealed medium (in the case of a horizontal shaft), there are special protective elements. Their design depends on the shaft rotation speed, the area of sealed medium interaction and magnetic fluid viscosity.

When sealing a rotating shaft located vertically, it is possible to exclude the contact of a sealed medium with a magnetic fluid completely. This requires using special gas dampers, which make it possible to seal a rotating shaft in the same way as an MFS for sealing gaseous media.

3 Experimental method

We studied a sealing ability of a modernized radial magnetic-fluid plain bearing experimentally [17, 18]. A sealing ability of a bearing is its ability to operate normally in contact with any liquid medium and not allow this medium to pass through itself along the shaft.

The scheme of the experimental bearing and the installation for the experiments is shown in Figure 1.

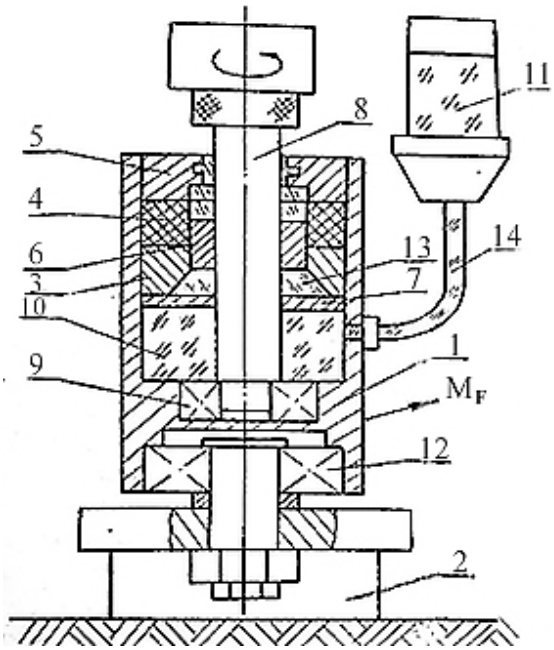

Fig. 1. The experimental setup schemes.

The bearing assembly is placed in a non-magnetic housing 1 on the frame 2. The bearing assembly housing 1 is mounted on a rolling bearing 12 and therefore can rotate relative to the base 2 to measure the friction moment M_F in the magnetic fluid plain bearing and seal.

The magnetic fluid bearing consists of a magnetic core 3, an annular permanent magnet 4, a magnetic circuit with teeth 5 (magnetic fluid seal) and a bushing 6 made of bronze. The lower end of the shaft 8 made of steel 45 is fixed in the inner ring of the ball bearing 9.

The upper end of the shaft is connected to the electric motor through a coupling. The sealed liquid is placed in the working volume 10 of the housing 2 and communicates with the reservoir 11 installed at a certain height to create increased pressure.

In the given bearing design, the magnetic fluid is in direct contact with the sealed fluid. To reduce the contact area between magnetic and non-magnetic fluids, we provide the following design solution. A non-magnetic washer 7 is attached to the end of the magnetic circuit 3.

There is the smallest possible gap (less than 0.1 mm) between the washer 7 and the rotating shaft 8. Magnetic oil fills the working volume of the bearing assembly and the area 13 between a magnetic circuit 3 and a washer 7. This reduces the likelihood of emulsification and the rate of diffusion processes of fluid interpenetration.

A magnetic circuit with teeth creates a strong magnetic field in the gap separating it from the shaft.

The magnetic fluid (oil) that fills the gap compensates for the increased pressure of the sealed fluid (essentially, the magnetic circuit, the shaft and the magnetic fluid make up magnetic fluid seals).

Some experiments involved testing the bearing shown inverted in Figure 1, i.e., the bearing in which the magnetic circuit 5 was facing the sealed liquid.

The shaft passing through the bearing had a diameter of 14 mm, the bushing length was equal to the shaft diameter, the relative clearance between the shaft and the bushing was 2 10^{-3}, and the field strength in this place was about 1.6 10^5 A/m. The gap between the

teeth and the shaft was 0.2 mm, the teeth thickness was 0.5 mm. The tests were carried out at a shaft rotation speed of 1000 rpm.

After a period of bearing running-in, we fixed a stable value of the friction torque. Then we poured liquid into the working volume 10 and continued further tests. The penetration of the liquid was judged by the change in the friction torque, the liquid level in the transparent tank 11, and the flow of the liquid through the magnetic circuit teeth 5.

The tests lasted for 200 hours if the bearing tightness was not violated earlier.

We studied a magnetic fluid bearing operation in contact with weakly polar liquids: MVP instrument oil, vaseline oil, and water that is a highly polar liquid.

Weakly polar liquids have a dielectric permittivity less than 2÷3 and a surface tension of about 20÷30 erg/cm^2. To seal such liquids, we chose the MM-TEA magnetic fluid with a dispersion medium of triethanolamine, which is almost insoluble in the indicated low polar hydrocarbon liquids, has a much higher dielectric permittivity (~110), and its surface tension is approximately the same.

Based on the established mechanisms of destructing a sealing magnetic fluid, the listed properties of the MM-TEA liquid make it possible to distinguish it from a number of others.

To seal water, we chose magnetic liquids containing siloxane fluids as a base, which are immiscible with water and are hydrophobic. The properties of magnetic fluids are shown in Table 1.

Table 1. Properties of magnetic fluids.

Magnetic fluid	Dispersion medium	Viscosity, Pa.s	Magnetization, kA/m
MM-PES1	PES-5	4.6	21
MM-FM	FM-6	2.4	38
MM-PES2	PES-5	15	195
MM-TEA	TEA	1.2	31

The MM-PES1 fluid differs from the MM-PES2 fluid by the presence of a finely dispersed magnetic filler in its composition, which significantly increases its magnetization and viscosity. (Strictly speaking, this is not exactly a magnetic fluid, but rather a colloidal system resembling a magnetorheological fluid.) Due to high viscosity, the selected magnetic fluids can only be used to lubricate bearings in exceptional cases. Therefore, we used them to fill only the sealing gap between the shaft and the magnetic core teeth, and the bearing was lubricated with a low-viscosity magnetic fluid based on PES-V-2.

The bearing was turned so that the sealing magnetic fluid was facing the water side. A washer similar to the washer 7 was installed near the magnetic core 5. The was a special baffle installed in the bearing to prevent mixing of sealing and lubricating fluids.

As it was stated above, we carried out the tests under conditions where the bearing was in contact with a limited volume of stagnant fluid. In the case when water was sealed, the tests were also carried out with its continuous flow near the bearing. For this purpose, the tank 11 (Figure 1) was connected to the water supply network, and the cavity 10 had a drain hole. The pressure of circulating water on the bearing did not exceed 20 kPa.

4 Experimental results and conclusions

We have established that the MM-TEA magnetic liquid based on triethanolamine quite reliably seals a bearing from the penetration of weakly polar liquids under an overpressure of 10 kPa and below.

We have not received any objective data on the bearing tightness reduction by the end of the tests. A comparison of the IR absorption spectra of pure 8aseline oil and the oil that has been in contact with magnetic fluid has shown that the latter contains an insignificant amount of triethanolamine (about 10^{-2} %). Apparently, this concentration of triethanolamine is close to the limit one, since the magnetic fluid was in contact with 8aseline oil that exceeds it in volume by only 10 times.

When operating in lentic water with an overpressure of 20 kPa, all magnetic fluids listed in Table 1 provided sealing during a 200-hour test cycle.

However, by the end of the tests, the following significant irreversible changes occurred in MM-PES1 and MM-FM magnetic fluids: viscosity increased, magnetization decreased. In running water, the tightness of the bearing with these liquids is broken after several tens of hours.

The negative effect of water on the structure of these magnetic fluids does not allow us to recommend them for practical use. However, it may be possible that if these magnetic fluids are stabilized with other non-fatty acid-based surfactants, the result will be different.

The magnetic fluid MM-PES2 has successfully passed all tests including tests in running water under the pressure of 0.1 Mpa. In the process of operation, a small part of a dispersion medium was washed out of the magnetic fluid, and no other noticeable changes in the structure occurred. Longer tests have shown that the washing out of the remaining part of the dispersion medium stops or at least slows down significantly.

The disadvantage of the MM-PES2 magnetic fluid is its high viscosity, especially in a magnetic field. Therefore, seals with this liquid can overheat due to dissipative energy losses due to friction. In addition, there is an abnormally large starting friction torque observed in seals with MM-PES2 fluid, which is a manifestation of its thixotropic structure.

A good sealing ability of the MM-PES2 magnetic fluid is due to its special structure. Superfine magnet particles together with larger particles of a magnetic filler form a dense packing with negligible porosity. The pores are filled with molecules of a surfactant stabilizer and a dispersion medium.

Sealed water is not able to destroy a magnetic fluid mechanically due to the presence of a strong framework of magnetic particles in it. Water can penetrate a magnetic fluid only through pores, but this requires very high pressure. It is not even necessary for pores to be filled with anything; it is sufficient that the walls of pores (particles) to be hydrophobic.

5 Conclusions

Thus, we can see a sufficiently high sealing ability of the MM-TEA magnetic fluid in contact with weakly polar liquid media. For sealing polar liquid media, it seems promising to use organosilicon oleophobic magnetic fluids that contain a large amount of filler in the form of magnetic particles with a dispersion that is 1–2 orders of magnitude lower than that of liquid magnetite particles.

In addition, special attention should be paid to the fact that a magnetic fluid has the smallest possible contact area with a sealed liquid and maintains a laminar flow regime. The obtained results have practical implementation in the design of a magnetic spindle assembly for a chemical homogenizer.

Authors express their gratitude to the colleagues who took part in the discussion of this work.

References

1. D. V. Orlov, Yu. O. Mikhalev, N. K. Myshkin, et al., Magnetic fluids in mechanical engineering (Mashinostroenie, Moscow, 1993)
2. V. E. Fertman, Magnetic fluids: a reference guide (Vyssh. Shkola, Minsk, 1988)
3. A. N. Bolotov, V. V. Izmaylov, M. V. Novoselova, Theoretical and experimental studies of processes in triboengineering systems: monograph (Tver State Tech. Univ., Tver, 2019)
4. M. S. Saikin, Magnetic fluid seals for technological equipment (Lan Publ., St. Petersburg, 2017)
5. M. Kole, S. Khandekar, J. Magnetism and Magnetic Materials **537**, 168–222 (2021)
6. O. L. Fedorov, *Evaluation of the resource of magnetic fluid seals in contact with liquid media*, in Proceedings of the 20th Anniv. All-Russ. Sci. Conf. on Nanodispersed Magnetic Fluids with Intern. Participation, ISPU Publ., Ivanovo, 277-287 (2022)
7. D. V. Orlov, O. L. Fedorov, T. V. Skrobotova, Magnetic Hydrodynamics **4**, 127–130 (1989)
8. Z. Li, D. Li, Y. Chen, Y. Yang, J. Yao Tribology Trans. **61(2)**, 367–375 (2018)
9. Wang Z., D. Li, Y. Zhang, Y. Gao, H. R. Neumann, Tribology Trans. **62(4)**, 650–657 (2019)
10. L. Matuszewski, Z. Szydlo, Polish Marine Research **18(2)**, 51–59 (2011)
11. T. Liu, Y. Cheng, Z. Yang, J. Magnetism and Magnetic Materials **289**, 411–414 (2005)
12. M. S. Saikin, Izvestia of RAS SamSC **13(1-2)**, 476–478 (2011)
13. V. S. Bazhenov, M. S. Saikin, *Features of the magnetic fluid seal operation in contact with liquid media*, in Science and innovations in technical universities: Proceedings of the 9th All-Russ. Forum of Students, Postgraduates and Young Scientists, St. Petersburg, Peter the Great St. Petersburg Polytechnic Univ., pp. 4–6 (2015)
14. O. L. Fedorov, *Evaluating the resource of magnetic fluid seals in contact with liquid media*, in Proceedings of the 20th Anniv. All-Russian Sci. Conf. on Nanodisperse Magnetic Fluids with Intern. Participation, Ples, Ivanovo, Ivanovo Power Engineering Institute, pp. 277–287 (2022)
15. A. Zangwill, Physics at Surfaces (University Press, Cambridge, 1988)
16. V. B. Kogan, S. K. Ogorodnikov, V. V. Kafarov, Handbook of Solubility. V.V. Kafarov (ed.) (1970)
17. A. N. Bolotov, Triboengineering of magneto-passive and magneto-fluid bearing slides, doctoral candidate's thesis (1993)
18. A. N. Bolotov, V. V. Novikov, V. G. Pavlov, J. Friction and Wear **25(3)**, 286–291 (2004)