Rin-in comb wheels of the wheel pair of the car when moving on a curve section of the path

Shukhrat Djabbarov[1*], *Jamshid* Abdirakhmanov[1], *Bakhrom* Abdullaev[1], *Sokhib* Namozov[1], *Rustam* Yuldoshov[1], and *Vasila* Ergasheva[1]

[1]Tashkent State Transport University, 1 Temiryulchilar Str., Tashkent 100069, Uzbekistan

Abstract. In the article, using the classical provisions of theoretical mechanics, various methods of constructing a computational model of rolling in the wheel crest of a wheelset of a wagon from when moving rolling stock along a curved section of track are presented.

1 Problem statement and its connection with scientific and practical tasks

In [1], the so-called "calculation" scheme is introduced to determine the stability of the locomotive wheel on the rail. However, due to a number of inaccuracies made during the construction of such models, for example, such as the replacement of forces from the body to the axle necks of the wheelset by concentrated mechanisms and at the same time leaving them on the model, the presence of rail threads in the model, although they are replaced by bond reactions, etc., cannot be attributed to any physical, and, moreover, neither to the design model of the wheelset of the car. In [2-4], one and/or two contact problems are mainly modeled, which arise when a locomotive wheelset comes into contact with rail threads without bringing a specific design model with all the forces acting on the wheel. At the same time, in [2], when solving problems of one- and two-contact problems, the equilibrium equations of the reaction of two bonds in the form of a rail and a footrest acting on the wheel are essentially composed. The equations of equilibrium of forces acting on the wheel of the wheelset from the side of the rail (connection) are not given, which would allow to obtain the conditions for rolling the wheel onto the thrust rail. In addition, the list of forces acting on the wheel and the causes of their occurrence are not considered in [1-4].

Proceeding from this, it can be noted that the researchers have overlooked the features of constructing calculation models of the wheelset of the car from rolling in. One of the features is that the load on the wheelset of the car depends entirely on the technology of placement (symmetrically and/or asymmetrically relative to the longitudinal and transverse axes of symmetry of the car) and cargo attachment [5-7].

It should be particularly noted that only those computational models that are built on the basis of the classical provisions of theoretical mechanics accompany the correct compilation of a mathematical model of the physical object under consideration [8, 9]. In this regard, the construction of a calculated model of a wagon wheelset from rolling in

* Corresponding author: shuhratassistent@gmail.com

when rolling stock moves along a curved section of track is an urgent task of railway transport and transport science.

The purpose of this article is to construct a computational model of a wagon wheelset from rolling in when rolling stock moves along a curved section of track.

2 Solution methods

Let's use the classical concepts and provisions of theoretical mechanics: connections, coupling reactions, the principle of release from bonds, the moment of a pair of forces, bringing a system of forces to a given point, the axiom that, without disturbing the state (motion or rest) of a solid body, balancing forces can be added and discarded.

3 Task conditions

Let us consider the condition of equilibrium of forces acting on the axis of the wheelset at the moment when the outer wheel rests on the rail A at point O with a rectilinear part of the ridge and tends to rise up under the action of the frame force $\overline{F}_{\text{p}}$, i.e., the ridge of the outer wheel of the wagon rolls onto the head of the thrust rail. Otherwise, let's consider the cases of the beginning of rolling the crest of the outer wheel of the car onto the head of the thrust rail. In this case, the rolling surface of the inner wheel will move relative to the inner rail towards the outer rail thread.

4 Accepted assumptions

The conicity (usually 1:20) of the main rolling surface of the wheels is neglected. It should be borne in mind that the normal inertia force $\bar{I}_n$ on the physical model of a wheelset is given only to take into account the movement of rolling stock along a curved section of the track, although there is simply no such force in absolute motion [8, 9]. In addition, since the normal inertia force $\bar{I}_n$ is, as it were, a component of the frame force $\overline{F}_{\text{p}}$, it is not taken into account in analytical expressions describing the conditions of equilibrium of forces.

It should be particularly noted that the frame forces $\overline{F}_{\text{p}}$ (which are equivalent to the transverse forces $\overline{F}_y$) include the forces that arise when the rolling stock moves along the waves of the unevenness of the path (i.e., the so-called transverse inertia force of the portable movement $\bar{I}_{ey}$), regardless of whether the rolling stock moves along a straight or curved section of the path; components aerodynamic drag forces across the car $\overline{F}_{\text{вy}}$; transverse components of the body weight force with a load $\overline{G}_y$ [8, 9], traction forces $\overline{F}_{\text{т.л}}$ or longitudinal compressive forces arising in the braking mode of rolling stock $\overline{F}_{\text{т.у}}$ [1]. The projection $\bar{I}_{ny}$ of the normal component of the inertia force in absolute motion $\bar{I}_n$ is also included in the number of transverse forces $\overline{F}_y$.

We emphasize that the normal component $\bar{I}_n$ of the inertia force in absolute motion does not arise and does not appear, but only takes into account the acceleration of the absolute motion of the body along the curve, i.e. no force $\bar{I}_n$ is actually applied to the body [8, 9]. For example, when a train is moving along a curved section of the track to a car with a rigidly fixed load (crew), in fact, no force $\bar{I}_n$ is applied. The statement that the normal

inertia force $\bar{I}_n$ presses the carriage against the outer rail thread, making it difficult to turn and thereby increasing the guiding force and, as a consequence, lateral wear of the outer rail, has no physical justification [1, 10]. There is also no physical justification for the statement that when moving along a curve, a force effect occurs in the form of centrifugal force [11, 12].

In accordance with this, we emphasize that the normal inertia force $\bar{I}_n$ on the physical and mathematical model of a car with a load and, in particular, a wheelset is given only to take into account the movement of rolling stock along a curved section of the track, although there is simply no such force in absolute motion [8, 9]. Modulo $\bar{I}_{ny}$ is much less than $\bar{I}_{ey}$.

Note that the transverse forces $\bar{F}_y$ act on the side frames of the trolleys, and through them on the axle boxes or on the axles of the wheelset of the wagon.

Based on this, we will call force $\bar{F}_y$ the "frame" force $\bar{F}_{\text{p}}$, i.e. $\bar{F}_{\text{p}} = \bar{F}_y$. The frame force $\bar{F}_{\text{p}}$ is attributed to the number of main forces pressing the wheelset of the bogies to the outer rail threads. It is taken into account that the number of loads from the body on the axle necks of the wheelset $\bar{F}_1$ and $\bar{F}_2$ (as vertical forces $\bar{F}_z$) includes the forces that arise when the rolling stock moves along the waves of unevenness of the path (i.e., the so-called vertical inertia forces of portable motion $\bar{I}_{ez}$), vertical components of the gravity forces of the body with a load $\bar{G}_z$, aerodynamic drag forces $\bar{F}_{\text{BZ}}$ and the normal inertia force $\bar{I}_{nz}$ in absolute motion [8, 9].

Decision. We show the solution of the problem using the following classical provisions of theoretical mechanics:

– the principle of freedom from bonds);

– the principle of freedom from ties and the provision on bringing the system of forces $\bar{F}_1$ and $\bar{F}_2$ to this point;

– the principle of being freed from bonds using the consequence of the axiom that, without violating the state of a solid body, a force (for example, a frame force $\bar{F}_{\text{p}}$) can be transferred along the line of its action to any point of the body.

– the principle of freedom from bonds and the provision on bringing the system of forces to a given point (for example, frame force $\bar{F}_{\text{p}}$).

1) To build a design model of a wheelset of a car, we will use the principle of freedom from ties. At the same time, we will keep in mind that for a wheeled pair of bogies of rolling stock, the rail threads A and B are the main links that keep it from moving in the transverse direction, i.e. along the sub-rail base (sleepers). Otherwise, the main purpose of the rail threads A and B, as external links, is the direction of the wheels of the rolling stock when moving on straight and curved sections of the track.

In this regard, the wheelset is first freed from the rail threads A and B, replacing their influence with bond reactions $\bar{R}_1$ and $\bar{R}_2$. Then, tangents τ – τ and normals n – n are drawn through the points of contact of the wheels with the rail threads A and B, as shown in Fig. 2.37. The coordinate axes O1yz are shown (see Fig. 1).

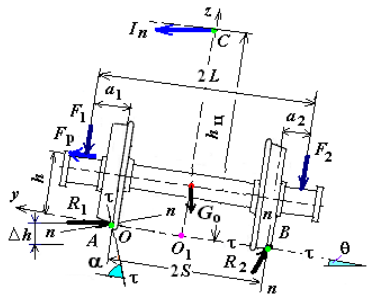

Fig. 1. Calculation model of the wagon wheelset

Figure 1 shows: a1 – the distance from the center of the neck of the axle of the wheelset to the crest of the wheel of the thrust thread (for a four–axle freight car, 0.264 m is assumed) and a2 - the distance from the center of the neck of the axle of the wheelset to the point of contact of the wheel with the inner rail thread (0.168 m is assumed).

Further, it should be borne in mind that the tangent τ – τ to the working face of the rail head at the point O of contact of the outer wheel ridge with the thrust thread rail A forms an angle α with the horizontal (axis O1y) (usually taken for freight cars equal to 60 °, and for locomotives – 70 °). Then, given that the movement of the wheelset relative to the rail threads is hindered by the friction forces between their contacting surfaces, the reactions of the bonds $\overline{R}_1$ and $\overline{R}_2$ are directed opposite to the movement of the wheels with some deviations from the normal n – n. This is done because, although the application points $\overline{R}_1$ and $\overline{R}_2$, as vector quantities, are known, but their directions and magnitude are unknown. In accordance with this, the reactions of bonds $\overline{R}_1$ and $\overline{R}_2$ are decomposed into normal $\overline{N}_1$, $\overline{N}_2$ and tangent $\overline{F}_{\tau 1}$, $\overline{F}_{\tau 2}$ components as shown in Fig. 2.

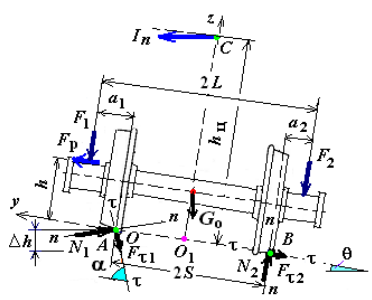

Fig. 2. Calculation model of the wagon wheelset

It is taken into account that the tangential components $\overline{F}_{\tau 1}$, $\overline{F}_{\tau 2}$ represent the friction forces between the contacting surfaces of the wheels and the rail threads, i.e. $\overline{F}_{\tau 1} = \overline{F}_{тр1}$, $\overline{F}_{\tau 2} = \overline{F}_{тр2}$. Friction forces, as resistance forces, are always directed in the direction opposite to the rolling of the wheel crest along the working face of the head of the thrust rail, as shown in Fig. 2.

Thus, a calculated model of the wheelset of the car is obtained (see Fig. 1) to determine the stability of the wheel on the rail.

2) We show the determination of the stability of the wheel on the rail by constructing a calculated model of the wheelset of the car using the provision on bringing the system of

forces to this point. To do this, at the corresponding points O2 and B2 of the wheelset axis, taken as the centers of reduction (see Fig. 1), we apply pairs of forces $\overline{F}_1'$, $\overline{F}_1''$ and $\overline{F}_2'$, $\overline{F}_2''$, equal in modulus, but opposite in direction, which are equal in modulus to forces $\overline{F}_1$ and $\overline{F}_2$ (Fig. 3). Otherwise, $\overline{F}_1' = -\overline{F}_1'' = \overline{F}_1$ and $\overline{F}_2' = -\overline{F}_2'' = \overline{F}_2$.

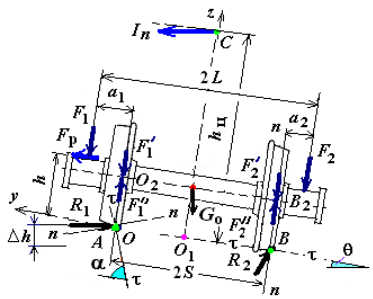

Fig. 3. Bringing the system of forces to this point

Therefore, according to the provision on bringing the system of forces to this point, pairs of forces $\overline{F}_1$, $\overline{F}_1''$ and $\overline{F}_2$, $\overline{F}_2''$ are replaced by concentrated bending moments M1 and M2 applied at the corresponding points O2 and B2 of the wheel axis, leaving concentrated forces $\overline{F}_1 = \overline{F}_1'$ and $\overline{F}_2 = \overline{F}_2'$ in the equivalent design model (Fig. 4).

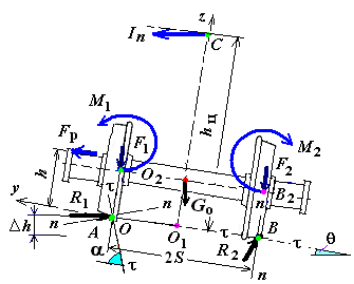

Fig. 4. Equivalent design model of a wheelset

Further, as in Fig. 2, the reactions of bonds $\overline{R}_1$ and $\overline{R}_2$ are decomposed into normal $\overline{N}_1$, $\overline{N}_2$ and tangent $\overline{F}_{\tau 1}$, $\overline{F}_{\tau 2}$ components (Fig. 5).

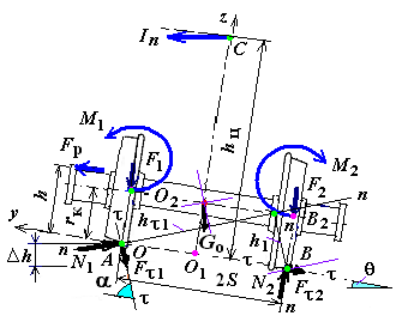

Fig. 5. Equivalent design model of a wheelset

Note that in Fig. 5 are indicated: h1 and hτ1 - the shoulder of the forces N1 and и Fτ1, respectively; rк – the radius of the wheel, equal to 0.475 m for a freight car

Thus, an equivalent calculation model of the wheelset of the car is obtained to determine the stability of the wheel on the rail (see Fig. 2).

3) We show the definitions of the stability of a wheel on a rail by constructing a kind of equivalent calculation model of a wagon wheelset using the consequence of the axiom that, without violating the state of a solid body, force can be transferred along its line of action to any point of the body. So, for example, the force $\overline{F}_{\text{p}}$ is transferred along the line of its action to the intersection with the continuation of the O – O2 line as shown in Fig. 6.

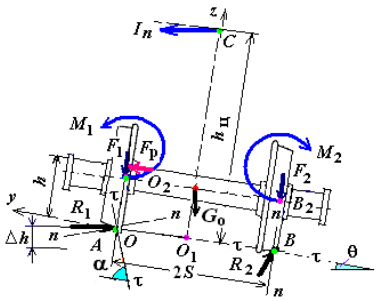

Fig. 6. A kind of equivalent design model of a wheelset

Further, the reactions of bonds $\overline{R}_1$ and $\overline{R}_2$, as before, are decomposed into normal $\overline{N}_1$, $\overline{N}_2$ and tangent $\overline{F}_{\tau 1}$, $\overline{F}_{\tau 2}$ components (Fig. 7).

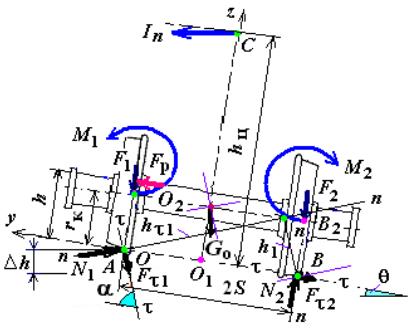

Fig. 7. A kind of equivalent design model of a wheelset

Thus, a kind of equivalent calculation model of a wagon wheelset is obtained to determine the stability of a wheel on a rail (see Fig. 5).

4) We will show the definitions of the stability of a wheel on a rail by constructing another kind of calculation model of a wagon wheelset using the provision on bringing the system of forces to this point. To do this, at the corresponding points O and B of the wheelset axis, taken as the centers of reduction, (see Fig. 6) apply pairs of forces $\overline{F}'_{\text{p}}$ and $\overline{F}''_{\text{p}}$, equal in modulus, but opposite in direction, which are equal in modulus to force $\overline{F}_{\text{p}}$ (Fig. 8). Otherwise, $\overline{F}'_{\text{p}} = -\overline{F}''_{\text{p}} = \overline{F}_{\text{p}}$.

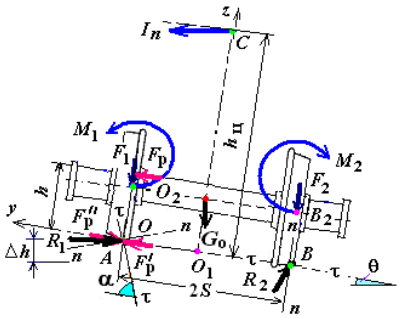

Fig. 8. Bringing the system of forces to this point

Therefore, according to the provision on bringing the system of forces to this point, the pairs of forces $\overline{F}_p'$ and $\overline{F}_p''$ are replaced by a concentrated bending moment Mp applied at the point O of the wheel axis, leaving concentrated forces $\overline{F}_p = \overline{F}_p'$ in the equivalent design model. Further, the reactions of bonds $\overline{R}_1$ and $\overline{R}_2$, as before (see Fig. 7), decomposed into normal $\overline{N}_1$, $\overline{N}_2$ and tangent $\overline{F}_{\tau 1}$, $\overline{F}_{\tau 2}$ components (Fig. 9).

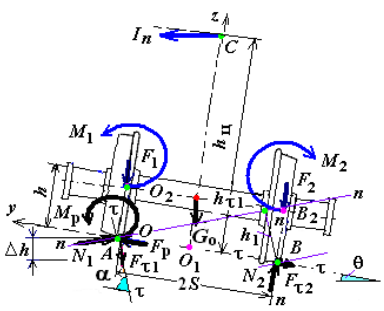

Fig. 9. A kind of equivalent design model of a wheelset

Thus, another kind of equivalent calculation model of a wagon wheel pair is obtained to determine the stability of the wheel on the rail (see Fig. 7).

5 Conclusions and prospects for the development of the applied problem

The constructed calculation models of the wheelset of the car from rolling in when the rolling stock moves along a curved section of the track allow us to mathematically correctly describe the process of rolling the wheelset onto the outer rail thread. At the same time, it should be borne in mind that in order to determine the unknown reactions of connections (rail threads), it is required either to make up the equilibrium equations of a plane system of forces in projections on the selected coordinate axes, or to make up the equations of moments of forces relative to two arbitrary points. We emphasize that the results of calculations for determining unknown reactions of external connections obtained by these methods may not be due to different values of the arms of forces that are not taken into account when composing the equation of equilibrium of forces in projections on the accepted coordinate axes. In this case, the calculated values of the normal coupling reaction

of N_1 and N_2 should be taken as the results of such methods, where the condition $N_1 > N_2$ is met.

This approach can be applied in the future to build a computational and mathematical model of the stability of the track against a transverse shift under the train.

References

1. Calculations and design of the railway track: textbook. allowance for university students transp. Ed. V.V. Vinogradova and A.M. Nikonov (M.: Route, 2003)
2. D.Yu. Pogorelov, *Simulation of rail vehicle dynamics with universal mechanism software.* Rail vehicle dynamics and associated problems: monograph (Gliwice: Silesian University of Technology, 2005)
3. S. Iwinicki, *Fundamentals of whell–rail interaction.* Rail vehicle dynamics and associated problems: monograph (Gliwice: Silesian University of Technology, 2005)
4. S. Gubenko, A. Sladkovski, *The influence of the contact stress on the structural chainges of railway wheel steel*. Rail vehicle dynamics and associated problems: monograph (Gliwice: Silesian University of Technology, 2005)
5. Kh. Turanov, E. Timuchina, Transport Problems International Scientific Journal. Silesian University of Technology **3(3),** 69–76 (2008)
6. Kh. Turanov, Transport Problems International Scientific Journal. Silesian University of Technology **4(1),** 77–86 (2009)
7. Kh. Turanov, V. Olentsevich, Transport Problems International Scientific Journal. Silesian University of Technology **5(1),** 23–32 (2010)
8. Kh.T. Turanov, Theoretical mechanics in freight traffic problems (Novosibirsk: Nauka, 2009)
9. Kh.T. Turanov, Interaction of open rolling stock and solid-state cargo (Moscow: PR-Press, 2010)
10. Big encyclopedia of transport: in 8 volumes. T. 4. Railway transport. Ch. ed. N.S. Konarev (M.: Great Russian Encyclopedia, 2003)
11. G.M. Shakhunyants, Railway way (M .: Transport, 1987)
12. M.I. Glushko, Transport of the Urals **4,** 41-43 (2008)