SolidWorks flow simulation software potential in hydrodynamic processes analysis for cone vortex emulsion

Evgenia Fialkova[1*], *Vladimir* Baronov[1], *Aleksandr* Slobodin[1], and *Konstantin* Nechaev[1]

[1]The Vereshchagin Vologda State Dairy Farming Academy, 160555 Molochnoe, Vologda, Vologda region, Russia

Abstract. The purpose of this work is to compare the hydrodynamic data of the real flow simulated by SolidWorks Flow Simulation in an emulsor of vortex type. The object of the study is an emulsion, in the central part of the energy separation chamber of which a zone of low pressure, the cavitation zone, is created. In this zone the dispersion phase collapses. Computer simulation of fluid dynamics of the emulsification process has been suggested to optimise the design of this type of emulsor. To check adequacy of results of modelling and real process, visualization and comparative evaluation of shape of flows at pressure of liquid at the inlet 0.4 MPa and its kinematic viscosity 10^{-6} m^2/s. The use of SolidWorks Flow Simulation software has been found to give a fairly close-to-reality overall flow pattern. When considering the calculated flow from the position of fluid displacement and comparing it with experimental data, a good match is seen in the shape of near-axis flows. Three vortex zones are clearly visible in the model. In the real flow there are similar vortex zones which, although not clearly visible, are visualised by photography. With the software, the overall flow pattern is fairly close to reality. However, it is not possible to conclude that the velocities of the calculated and real flows coincide. By considering the various design changes in the simulation and evaluating their effect on the hydro and thermodynamics of the process, some regularities can be identified and used in the design of new designs, i.e., the results of computer simulation can be a good guide in the design of new devices.

1 Introduction

Emulsions are an indispensable component of the food industry in the production of meat, fish and dairy products, confectionery and beverages. The most widespread use of emulsions is in the oil and fat industry for margarine, mayonnaise and various sauces, for example. Considering that milk itself is an emulsion, it is clear that emulsification is necessary for dairy products and especially for dairy products, which are gaining popularity in recent times [1-5].

The greater the dispersibility of the emulsion, the higher its palatability and digestibility by the body. Therefore, much attention is currently given to developing all kinds of emulsifier

* Corresponding author: Fialkova_ea@mail.ru

designs, devices for producing emulsions, which most commonly create a 'fat-in-water' emulsion and sometimes an inverse 'water-in-fat' emulsion. Various physical influences are used for intensive dispersion of the fat fraction, namely an irregular magnetic field, ultrasound radiation, and most frequently an intensive mechanical action. For this purpose, they create special grooves, through which dispersed product passes, narrow gaps, in which product velocity increases, shock influences on product and so on are applied [6, 7].

Any new design solution of emulsifying devices is aimed at improving the quality of emulsion, particularly its dispersity, which largely determines the taste of the emulsion and its digestibility. Improving the design of the device requires considerable work, namely the design and manufacture of a large number of versions of various parts, testing their impact on the process, and a detailed analysis of the experimental results.

If we summarize all factors of influence on the product in the process of emulsification, we can understand that they all boil down to intensification of cavitation zones in the product flow [8].

Cavitation zones are characterised by reduced pressure. Therefore, for the most intensive dispersion of the fat fraction it is necessary to create extensive cavitation zones and to make it possible to pass the product through these zones, or, more precisely, to increase the product residence time in these zones. The main condition of high dispersity of the product and homogeneity of its dispersion composition is the passage of the entire volume of the product entering the unit through the cavitation zones [9, 10].

Consequently, the problem is reduced to the optimization of hydrodynamic conditions of the emulsification process, which are achieved by optimizing the design and operational and technological parameters of the device, namely temperature, pressure, power of ultrasonic or magnetic radiation.

2 Materials and methods

Optimization of hydrodynamic parameters of any process, in particular, emulsification process, requires, first of all, corresponding changes in design parameters of the device, namely the design part organizing the flow of emulsion and its components, as well as the flow of all kinds of radiations. In order to reduce the time and cost to improve the design of the device, it seems appropriate to conduct a virtual simulation of the hydro- and thermodynamic processes that accompany the emulsification. For this purpose, numerous computer programs Siam Well Test, ANSYS fluent, COMSOL Multiphysics®, SolidWorks Flow Simulation and many others currently exist. The results of the thermodynamic and fluid dynamic patterns obtained with any of these programs are certainly not to be regarded as the final authority. All of them are based on the least squares method. In order to carry out a study, the model is partitioned into a number of elementary sections by means of a computational grid. At each node of the computational grid the program calculates all the hydrodynamic parameters. Any of the above programs perform a number of successive iterations until full convergence is achieved at each node of the computational grid. The calculation can be done with different grid cell sizes: the denser the computational grid, the more accurate the calculation results will be. At the same time, this increase in accuracy will require considerably more calculation time. The software allows you to select the mesh size of the computational grid according to the accuracy scale. Therefore, there is always a margin of error, even when the highest degree of accuracy is chosen.

3 Design and operation of the emulsor

The purpose of this work is to compare hydrodynamic data of real flow and simulated in

SolidWorks Flow Simulation in a vortex-type emulsor.

The main element of the experimental vortex emulsifier is the vortex chamber, or energy separation chamber 1 (Fig.1 a). In the central part of the energy separation chamber an intense cavitation zone is formed, where dispersion of all components of the emulsion occurs. The chamber is made of transparent material, making it possible to visualise the hydrodynamic processes taking place in it. The energy separation chamber is fixed on the metal housing 6 by sealant 3. The gasket 2 additionally ensures complete tightness of the working chamber. To the upper part of the housing 6 by means of four symmetrically arranged screws 5 is clamped disc 4 with three slots, providing a uniform tangential flow of the dispersion phase in the energy separation chamber of the emulsor.

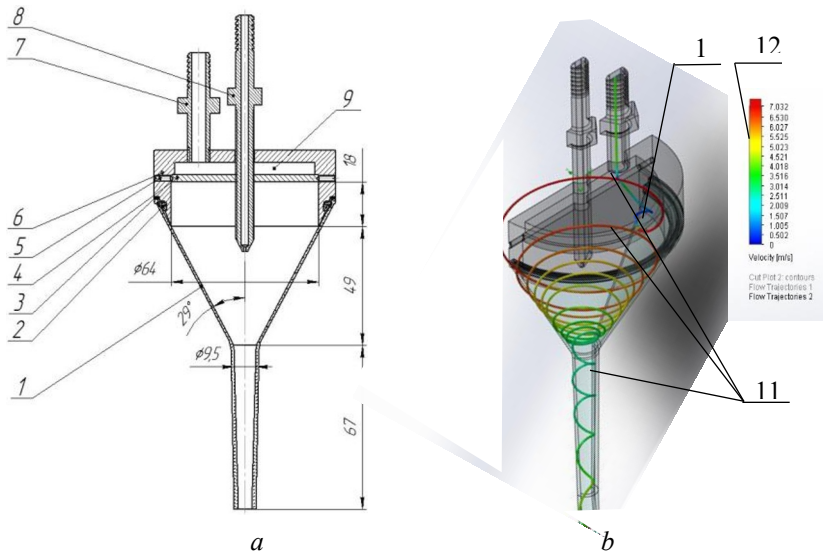

Fig. 1. Vortex emulsion design: a - vortex device scheme, b - software simulation of vortex flow trajectory, 1 - energy separation chamber, 2 - gasket, 3 - sealant layer, 4 - disc with slots for dispersion medium supply, 5 - screws, 6 - upper part of body, 7 - dispersion medium supply pipe, 8 - dispersion phase supply pipe, 9 - pressure chamber of dispersion medium supply to the working chamber 10 - flow path line, 11 - tangential slots in the disk 4, 12 - vortex flow path

The disc is firmly pressed against the step on top of the housing to hold it firmly in place. Disc 4 separates the dispersion medium supply area 9 from the energy separation chamber. The dispersion medium is fed through nozzle 7, rigidly fixed to the body. The dispersed phase is fed through nozzle 8 into the energy separation chamber, in the cavitation area, through the injector, which ends the dispersion medium supply branch pipe. Spigot 8 is screwed into housing 6. Figure 1b shows the trajectory of the dispersion medium 11, which first passes through the branch pipe 7, then through the chamber 8 and, further, passing through the slots 4, takes the form of a torsion spiral in the energy separation chamber 1.

The principle of operation of the vortex emulsifier is as follows. Dispersing medium is fed into the chamber 9 through the branch pipe 7 under pressure. Then, passing through slots 10 in disk 4, the dispersion medium flow acquires a helical trajectory, moving to the outlet of the vortex chamber 1 in the form of a twisting spiral 11. The vortex motion has the property of creating zones of reduced pressure in the central part of the flow, near the axis. It is near the axis of the energy separation chamber that the cavitation zone is created. That is why the vortex emulsor is designed to feed the dispersed phase directly into the cavitation zone through nozzle 8. In the cavitation zone, there is intensive mixing of the dispersion medium and the dispersed phase and its crushing into small fat globules.

4 Description of the hydrodynamic processes in the vortex emulsion

As a result of computer simulation in Flow Simulation software, the flow path (Fig. 1b) was obtained and flow parameters such as pressure and velocity throughout the volume of the vortex device were obtained. A grid with a cell size of 0.039 to 0.43mm has been selected for the calculation. The static pressure parameters at the inlet of the spigot 7 and the outlet of the energy separation chamber 1 were chosen as boundary conditions for the model under study. The inlet pressure value is 0.4MPa. The outlet condition was assumed to be free, that is, 0.1MPa. The calculation assumed a simplified model of fluid flow in the emulsion body, not taking into account fluid supply through the injector. As can be seen from figure 1b, the trajectory line is differently coloured. The colour of the line corresponds to the flow velocity, which is determined by scale 12 in Figure 1 b, or 4 in Figure 2. Passing through dispersion medium supply nozzle 7 (Figure 1), flow 1 (Figure 2) has small speed of about 3.5 m/s, then, passing through pressure chamber, flow 2 (Figure 2) slows down and accelerates again in slots and inlet chamber to 7 m/s.

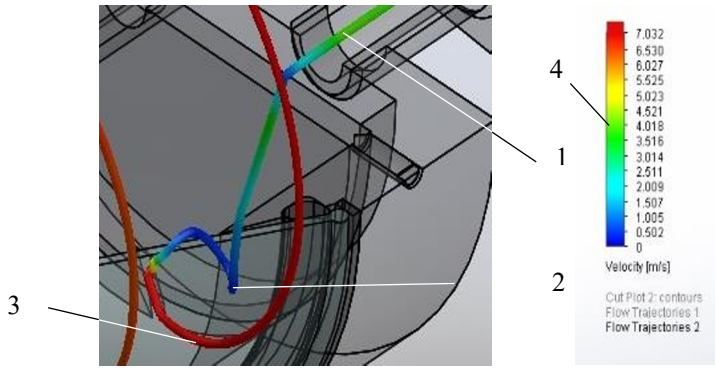

Fig. 2. Enlarged part of the dispersion medium inlet trajectory into the energy separation chamber: 1 - trajectory in the feeder pipe, 2 - trajectory in the pressure chamber, 3 - trajectory out into the energy separation chamber, 4 - velocity scale

5 Results

For visual comparison of model and theoretical flows, an epureure of circumferential velocities with current lines was constructed and compared with a photo of the real flow in the working chamber of the emulsor with the alogical design and operating parameters, namely, inlet pressure 0.4 MPa, kinematic viscosity coefficient equal to 10^{-6} m^2/s. When considering the calculated flow from the position of fluid movement and comparing it with experimental bottoms (Figure 3) it is noticeable their good agreement in the shape of near-axis flows. Vortex zones 1, 2, 3 can be clearly seen on the model (Figure 3). In the real flow there are similar vortex zones 5, 6, 7, which, though not very clearly, are visualized in the photo. They are slightly shifted as compared to the model ones, but their presence is obvious. It should be noted a good coincidence in the shape of the near-axis flows 4 and 8. Consequently, using the software, the overall flow pattern is quite close to reality.

However, it is not possible to conclude about coincidence of motion velocities of calculated and real flows.

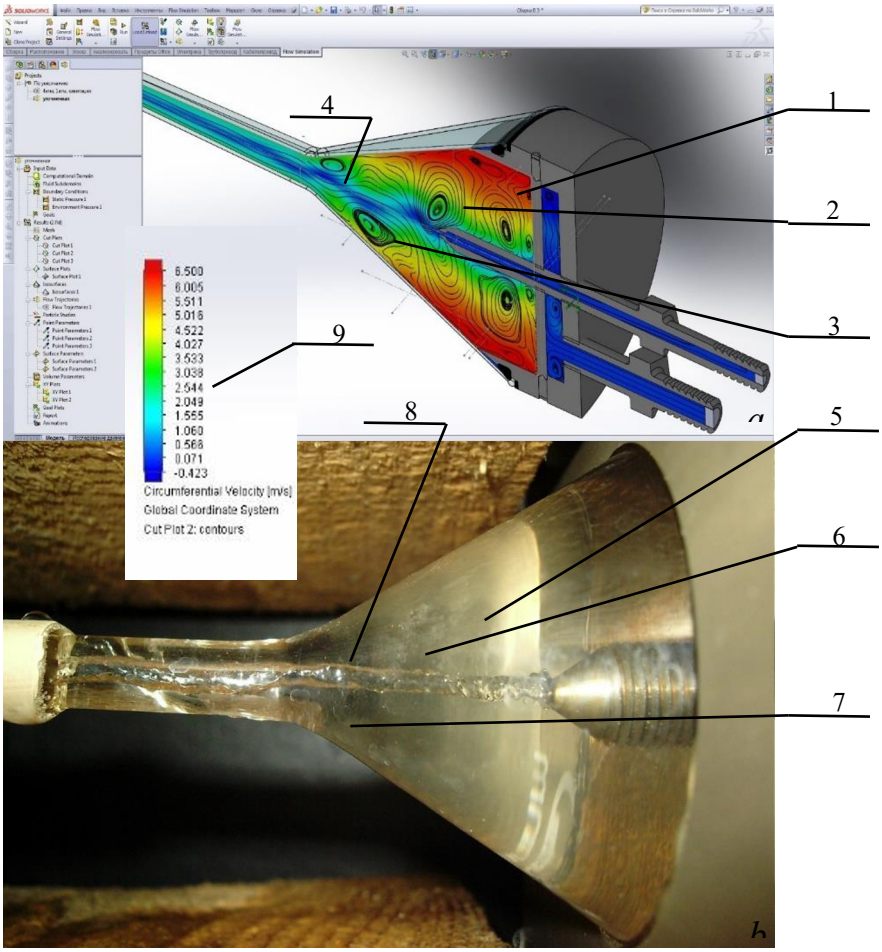

Fig. 3. Fluid flow in vortex chamber of emulsifier: a - flow circumferential velocity diagrams, b - photo of real fluid flow with same design parameters of vortex chamber and flow boundary conditions, 1, 2, 3 - vortex zones in model, 5, 6, 7 - vortex zones in real flow, 4, 8 - near-axis flows in model and in real flow respectively, 9 - flow velocity scale

6 Discussion

In conclusion, it should be noted that, at the basis of programs are hydrodynamic laws proposed in Navier-Stokes equations, which do not always adequately describe the real process. Therefore, achievement of optimal conditions in computer simulation does not guarantee its absolute adequacy to real process. The data obtained in the calculations must be verified under real conditions. By considering the various design changes in the simulation and evaluating their effect on the hydrodynamics and thermodynamics of the process, some regularities can be identified and used in the design of new designs.

7 Conclusions

Experimental data and computer model in SolidWorks Flow Simulation software, under the same process conditions, allow us to get quite close to reality total flow picture. However, it is not possible to conclude about coincidence of motion velocities of calculated and real

flows. As a result, it can be concluded that the results of computer simulation can be a good guide when creating new devices.

8 Acknowledgements

This work was supported by a research grant from the Vologda Oblast Department of Economic Development (Contract No. 21 of 10.12.2021)

References

1. I.V. Kalinina, N.V. Naumenko, B. Judges, A.M.Ya. Kadi, A.V. Malinin, A.V. Tsaturov, Bulletin of the South Ural State University. Series: Food and Biotechnology, **10 (4),** 109-114 (2022) https://doi.10.14529/food220411
2. U. Bakale, I.V. Kalinina, N.V. Naumenko, A.M.Ya. Kadi, A.V. Malinin, A.V. Tsaturov, Bulletin of the South Ural State University. Series: Food and Biotechnology, **11(1)**, 27-34 (2023) https://doi.10.14529/food230103
3. K. Woojeong, Yo. Wang, C. Selomulya, Trends in Food Science & Technology **105,** 261-272 (2020) https://doi.10.1016/j.tifs.2020.09.012
4. Z. Ren, X. Li, F. Ma, Yun Zhang, W. Hu, Md Zaved Hossain Khan, X. Liu, LWT **162,** 113468 (2022) https://doi.10.1016/j.lwt.2022.113468
5. E.A. Fialkova, V.I. Baronov, A.A. Slobodin, IOP Conference Series: Earth and Environmental Science. Cep. "International Conference on World Technological Trends in Agribusiness" 012139 (2021) https://doi.10.1088/1755-1315/624/1/012139
6. G. Øye, S. Simon, T. Rustad, K. Paso, Current Opinion in Food Science **50,** 101003 (2023) https://doi.10.1016/j.cofs.2023.101003
7. A.C. Ariel, H. Toledo, E. Keven Silva, M. Cristianini, A.J.A. Meirelles, Innovative Food Science & Emerging Technologies **84**, 103301 (2023) https://doi.10.1016/j.ifset.2023.103301
8. Wei Li, Mingjiang Liu, Leilei Ji, Shuo Li, Rui Song, Cheng Wang, Weidong Cao, Ram esh K. Agarwal, Ocean Engineering **267**, 113225 (2023) https://doi.j.oceaneng.2022.113225
9. Liang Wang, Fushi Bai, Haoren Feng, Jiamei Jin, Jens Twiefel, Sensors and Actuators A: Physical **346,** 113880 (2022) https://doi.10.1016/j.sna.2022.113880
10. Jincheng Hu, Miao Yuan, Gan Feng, Xiaochuan Wang, Ocean Engineering **274,** 114108 (2023) https://doi. j.oceaneng.2023.114108