Investigation of wind effects on the design of a mobile radar antenna panel

D. A. Solomatin[1*] and *S.A.* Shumskaia[1]

[1]Moscow Aviation Institute (National Research University), 4, Volokolamskoe Shosse, Moscow, 125993, Russian Federation

Abstract. This paper presents the static calculation of the mobile radar station antenna fabric design, taking into account the action of its own weight of the load-bearing structure products combined with the load from the limit wind flow. Part of the load-bearing elements are made of the advanced orthotropic material alumoglass plastic, which will allow to significantly gain in weight while maintaining the necessary rigidity and strength. On the basis of aerodynamic calculation, the cases of maximum loading of antenna fabric have been chosen. The possibility of using products made by SLM technology in especially stressed and critical products has been considered.

1 Introduction

Since many radar stations are based outdoors, such as ground, ship, satellite, airborne, and mobile, one of the loading conditions of any such structure is wind loading created by wind flow.

In this paper, we consider a platform vehicle carrying a container with a rack (taken from the Ground Master 400 installation) on which a radar panel is attached.

The vehicle with the container was considered solely in the aerodynamic calculation for the calculation of air masses movement. The vehicle was taken with overall dimensions: length 8530 mm, width 2500 mm, height 2630 mm with a platform 5774K3 for transportation of type 1C containers. The container contains a rotating rack, to which the radar antennae being examined is attached. Container type 1S with overall dimensions: length 6000 mm, width 2400 mm, height 2600 mm. It has a rack made of 09G2S steel grade.

The aerial canvas consists of the following basic elements: radio transparent shelter, I-beams (pultrusion profiles), load-bearing metal structures of the aerial canvas made of alumina and the aerial sublattice [1-5]. The possibility of replacing standard, classical materials with composite materials [6-27] and the possibility of using additive manufacturing, to produce structural elements using SLM technology [28-31] as a possibility of automated repair in remote or hard-to-reach areas have been considered [32-33].

* Corresponding author: gxtl@mail.ru

The calculations are based on the standard characteristics of the materials used in the construction, adopted in accordance with the reference data. The load bearing steel structures of the antenna plate and the sections forming the antenna sublattice are made of 09G2S steel.

2 Calculation methodology

The aerodynamic calculations are carried out in Ansys Workbench, module CFX. Loads associated with the weight of the structure and climatic influences are specified as external loading conditions. Based on numerical simulations, wind loads are determined. A vehicle with a container is considered exclusively in the aerodynamic calculation for the calculation of air masses. In particular the influence of the cab and the platform itself on the level and pressure distribution of the wind flow has been considered.

3 Numerical calculations and results

The wind pressure was determined using the Ansys CFX package used to simulate the flow of liquids and gases, taking into account turbulence [34-40]. The considered design cases as a function of wind flow direction are shown in Fig. 1.

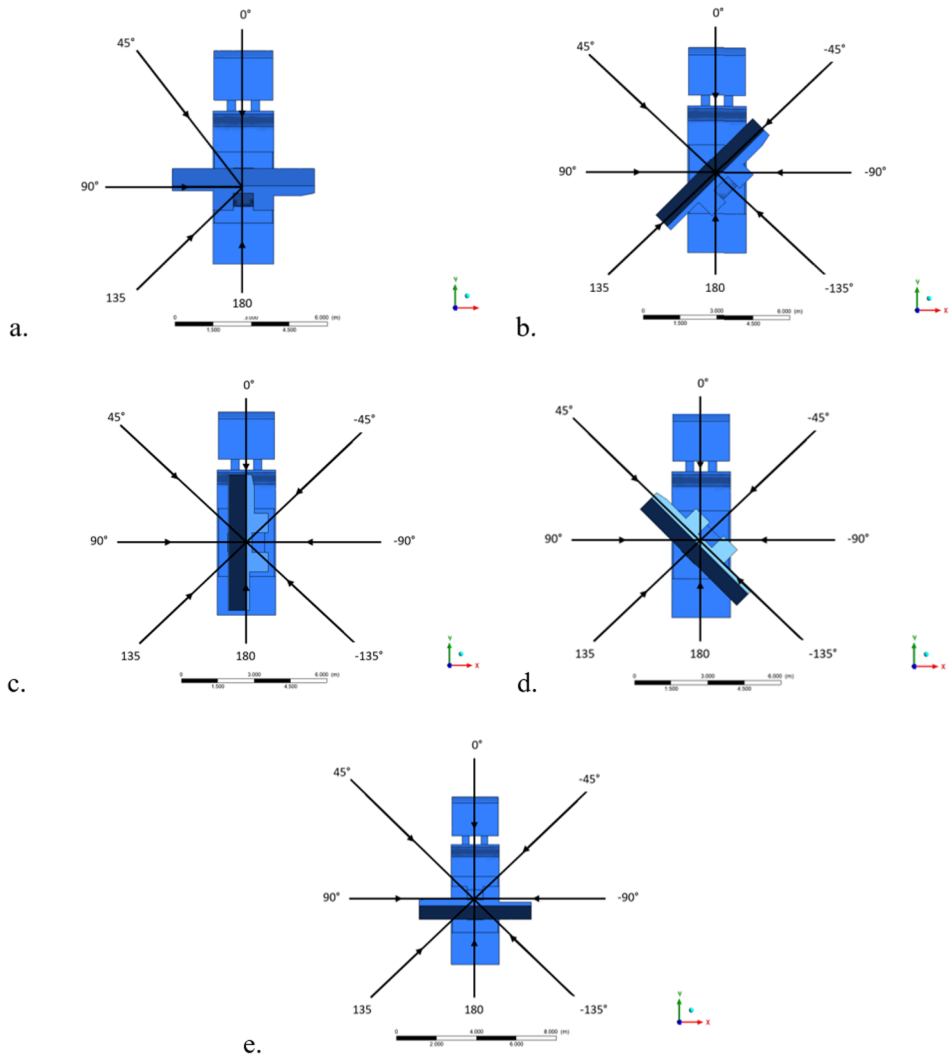

Fig. 1. Calculation cases with different radar panel locations in relation to the vehicle (a - 0°, б - 45°, b - 90°, c - 135°, d - 180°).

Velocity profile as a function of altitude according to the load and impact code. The distribution of average wind speed U over height z above ground level is determined by the equations:

$$U(z) = U_0 \left(\frac{z}{z_0}\right)^{\alpha}, U_0 = \left(\frac{2w_0}{\rho}\right)^{0,5}$$

Where w_0 – normative value of wind pressure, in Pa, is determined by the type of wind region, and the parameters z_0 and α - type of terrain roughness irrespective of the wind region.

As ambient conditions were assumed: temperature — +50°C, atmospheric pressure — 630 [mm.m.th.], air humidity — 40%, air density — 0.856975 [kg/m^3], the following air property input parameters were dialed: temperature — +50°C, atmospheric pressure —

0.828947 [atm.], molar mass — 0.027411 [kg/mole], air density — 0856975 [kg/m^3], dynamic viscosity —1.8429518·10^5 [Pa×s].

For the most critical cases of wind loading, a static calculation was carried out in Ansys Workbench, in the Static Structural module.

To perform the static calculation, a detailed model of the antenna plate post (bracket), Fig. 2, with overall dimensions: length 1450 mm, width 1270 mm, height 4180 mm, has been modelled. In order to simplify the overall model, all structural elements considered in the calculation have been designed as surfaces (Shell elements). The subject of the study is the design of the antenna plate, so the bracket has been modelled in a more simplified form.

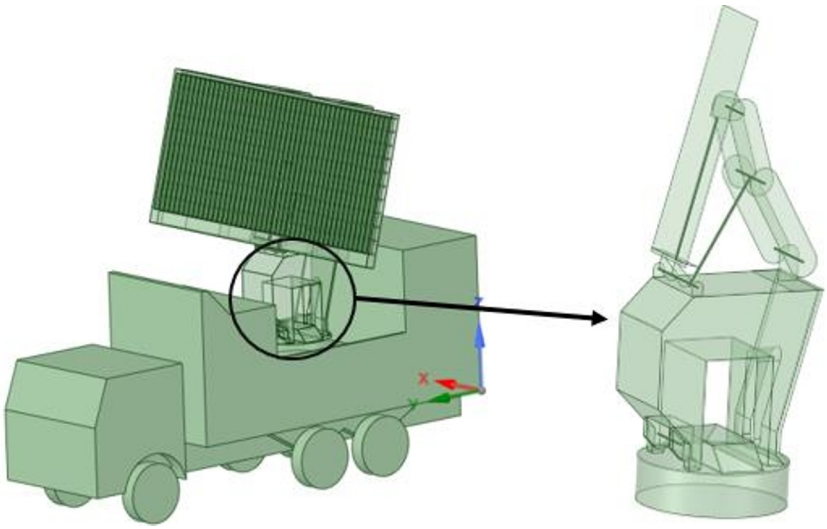

Fig. 2. Antenna web stand.

Basket" in which the antennae fabric is located, Fig. 3, with overall dimensions: length 5600 mm, width 1000 mm, height 2600 mm, was simulated.

The antenna panel with overall dimensions of 5500x2300x180 mm, consisting of radar dome (RD), Supporting metal structures of the antenna panel, antenna sub-framework and I-beams (pultrusion profile), Fig. 4.

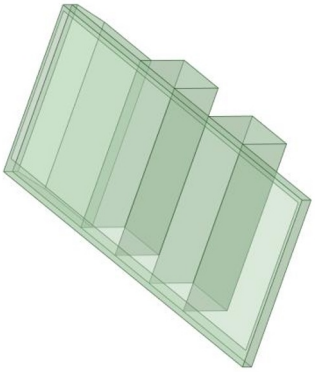

Fig. 3. Basket containing the antenna web structure mobile radar.

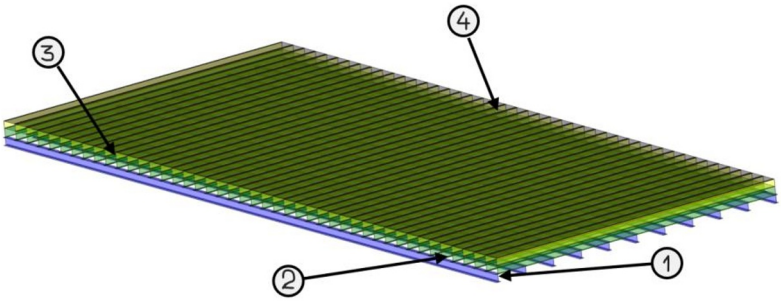

Fig. 4. Antenna leaf (1 - antenna leaf load-bearing metal structure, 2 - antenna sublattice, 3 – radar dome framing, 4 – RD).

Based on the results of the numerical aerodynamic calculation, the maximum pressures created by the airflow on the vehicle with the container with the rack and on the antenna panel were obtained.

4 Conclusion

The aerodynamic calculation of the wind flow on the object as a whole and on the panels was carried out by mobile radar. In particular, we take into account the influence of the location of the vehicle cab in the vicinity of the antenna panel. The effects of wind flow from different angles of direction relative to the frontal surface of the vehicle and with different calculated cases of location of the antenna plate relative to the frontal surface of the container vehicle are considered.

Acknowledgements

This work was carried out with the financial support of grant MK-398.2022.4 from the President of the Russian Federation.

References

1. Y. Solyaev, A. Babaytsev. Direct observation of plastic shear strain concentration in the thick GLARE laminates under bending loading. Composites Part B: Engineering, Vol. 224, 2021.
2. Prokudin, O.A., Solyaev, Y.O., Babaytsev, A.V., Artemyev, A.V., etc. Dynamic characteristics of three-layer beams with load-bearing layers made of alumino-glass plastic. PNRPU Mechanics Bulletinthis link is disabled, 2020, 2020(4), pp. 260–270.
3. A.V. Babaytsev, L. N. Rabinskiy, Kyaw Thu Aung. Investigation of the contact zone of a cylindrical shell located between two parallel rigid plates with a gap. Incas bulletin Volume 12 pp. 43 – 52. DOI: 10.13111/2066-8201.2020.12.S.4 (2020).
4. Amosov, A. G. (2021). Classification indicators of maintainability of technical systems. AIP Conference Proceedings, 2402.
5. Amosov, A. G. (2021). Curvilinear trajectory of track machines. AIP Conference Proceedings, 2402.
6. Pogodin V.A., Astapov A.N., Eremkina M.S., Babaytsev A.V., Rabinskiy L.N. Investigation of the low-temperature oxidation effect on the structure and mechanical

properties of c/c composite. Nanoscience and Technology, Vol. 12, Issue 3, pp. 29 – 46, 2021, DOI: 10.1615/NanoSciTechnolIntJ.2021037997.

7. Y. Solyaev, A. Babaytsev, A. Ustenko, A. Ripetskiy, A. Volkov. Static and dynamic response of sandwich beams with lattice and pantographic cores. Journal of Sandwich Structures and Materials 0(0) 1–24, 2021, DOI: https://doi.org/10.1177/10996362211033896.
8. Astapov, A., Rabinskiy, L., & Tushavina, O. (2021). Oxidation resistance of a si–tisi2–mosi2–tib2–casi2 coating on a cf/c–sic substrate in high-speed high-enthalpy air plasma flows. Nanomaterials, 11(10).
9. Astapov, A. N., Rabinskiy, L. N., Tushavina, O. V., & Starovoitov, E. I. (2021). Influence of air plasma flow on a cf /sic composite with a si-tisi2-mosi2-tib2-casi2 heat-resistant coating system. Journal of the Balkan Tribological Association, 27(2), 231-242.
10. Babaytsev, A. V., Kuznetsova, E. L., Rabinskiy, L. N., & Tushavina, O. V. (2020). Investigation of permanent strains in nanomodified composites after molding at elevated temperatures. Periodico Tche Quimica, 17(34), 1055-1067.
11. Babaytsev A.V., Zotov A.A. Designing and Calculation of Extruded Sections of an Inhomogeneous Composition. Russian Metallurgy (Metally). Volume 2019, Issue 13, 1 December 2019, Pages 1452-1455, DOI: 10.1134/S0036029519130020.
12. Pronina, P. F., Sun, Y., & Tushavina, O. V. (2020). Mathematical modelling of high-intensity heat flux on the elements of heat-shielding composite materials of a spacecraft. Journal of Applied Engineering Science, 18(4), 693-698.
13. B.A. Garibyan. Enhancement of Mechanical Properties of Inorganic Glass under Ultrasonic Treatment, International Journal of Pharmaceutical Research, 2020, Vol. 12, Supplementary Issue 2, pp. 1829-1832.
14. M.O. Kaptakov. Effect of Ultrasonic Treatment on Stability of TiO2 Aqueous Dispersions in Presence of Water-Soluble Polymers, International Journal of Pharmaceutical Research, 2020, Vol. 12, Supplementary Issue 2, pp. 1821-1824.
15. O.A. Butusova. Surface Modification of Titanium Dioxide Microparticles Under Ultrasonic Treatment, International Journal of Pharmaceutical Research, 2020, Vol. 12, I. 4, pp. 2292-2296.
16. A.N. Tarasova. Vibration-based Method for Mechanochemical Coating Metallic Surfaces, International Journal of Pharmaceutical Research, 2020, Vol. 12, Supplementary Issue 2, pp. 1160-1168.
17. N.A. Bulychev. Study of Interaction of Surface-Active Polymers with ZnO Nanoparticles Synthesized in Ultrasonically Assisted Plasma Discharge, Nanoscience and Technology: An International Journal, 2022, Vol. 13, I. 1, pp. 55-65.
18. B.A. Garibyan. Mechanical Properties of Electroconductive Ceramics, International Journal of Pharmaceutical Research, 2020, Vol. 12, Supplementary Issue 2, pp. 1825-1828.
19. O.A. Butusova. Stabilization of Carbon Microparticles by High-Molecular Surfactants, International Journal of Pharmaceutical Research, 2020, Vol. 12, Supplementary Issue 2, pp. 1147-1151.
20. V. Goncharenko, Yu. Mikhaylov, N. Kartushina. Pattern recognition techniques for classifying aeroballistic flying vehicle paths, Neural Computing and Applications, 2022, Vol. 34, I. 5, pp. 4033-4045.

21. A.Yu. Burova. Theoretical basis, concept and methodology of control and correction of turbojet engines thrust asymmetry, Journal of Physics: Conference Series, 2022, 2308(1), 012006.
22. O.A. Butusova. Vinyl Ether Copolymers as Stabilizers of Carbon Black Suspensions, International Journal of Pharmaceutical Research, 2020, Vol. 12, Supplementary Issue 2, pp. 1152-1155.
23. M.O. Kaptakov. Catalytic Desulfuration of Oil Products under Ultrasonic Treatment, International Journal of Pharmaceutical Research, 2020, Vol. 12, Supplementary Issue 2, pp. 1838-1843.
24. A.N. Tarasova. Effect of Reagent Concentrations on Equilibria in Water-Soluble Complexes, International Journal of Pharmaceutical Research, 2020, Vol. 12, Supplementary Issue 2, pp. 1169-1172.
25. O.A. Butusova. Adsorption Behaviour of Ethylhydroxyethyl Cellulose on the Surface of Microparticles of Titanium and Ferrous Oxides, International Journal of Pharmaceutical Research, 2020, Vol. 12, Supplementary Issue 2, pp. 1156-1159.
26. A.N. Tarasova. Effect of Vibration on Physical Properties of Polymeric Latexes, International Journal of Pharmaceutical Research, 2020, Vol. 12, Supplementary Issue 2, pp. 1173-1180.
27. M.O. Kaptakov. Enhancement of Quality of Oil Products under Ultrasonic Treatment, International Journal of Pharmaceutical Research, 2020, Vol. 12, Supplementary Issue 2, pp. 1851-1855.
28. Babaytsev, A., Nikitin A., Ripetskiy A.. VHCF of the 3D-Printed Aluminum Alloy AlSi10Mg. Inventions 8(1):33, DOI:10.3390/inventions8010033.
29. Babaytsev, A. V., Orekhov, A. A., & Rabinskiy, L. N. (2020). Properties and microstructure of AlSi10Mg samples obtained by selective laser melting. Nanoscience and Technology, 11(3), 213-222.
30. Thant Zin Hein, Arseniy V. Babaytsev, A.V. Ripetskiy. Effect of build atmosphere on the surface roughness of AlSi10Mg samples produced by selective laser melting. Nanoscience and Technology: An International Journal, 2022, Vol. 13, Issue 1, pp. 1-9.
31. Babaytsev, A.V., Astapov, A.N., Ripetskiy, A.V., Sha, M. Verification of mechanical properties and surface topography of PH1 stainless steel samples obtained by selective laser melting. Periodicals of Engineering and Natural Sciences, 2021, 9(4), pp. 417–432.
32. Y. Solyaev, A. Babaytsev. Direct observation of plastic shear strain concentration in the thick GLARE laminates under bending loading. Composites Part B: Engineering, Vol. 224, 2021. Proceedings, 2402.
33. Amosov, A. G. (2021). Special software application for antenna modelling in mechanical engineering. Journal of Physics: Conference Series, 1889(4).
34. Amosov, A. G. (2021). Comparative analysis of requirements for industrial cleanliness in mechanical engineering. Journal of Physics: Conference Series, 1889(4).
35. Bodryshev, V.V., Babaytsev, A.V., Orekhov, A.A., Min, Y.N. Digital method for analysing speckle-interferometric images of material deformation. Periodicals of Engineering and Natural Sciences, 2021, 9(3), pp. 886–900.
36. Orekhov, A., Rabinskiy, L., & Fedotenkov, G. (2022). Analytical model of heating an isotropic half-space by a moving laser source with a gaussian distribution. Symmetry, 14(4).

37. N.A. Bulychev, L.N. Rabinskiy, O.V. Tushavina. Effect of Intensive Mechanic Vibration of Ultrasonic Frequency on Thermal Instable Low-Temperature Plasma, Nanoscience and Technology. An International Journal, 2020, Vol. 11, I. 1, pp. 15-21.
38. Zhavoronok, S.I., Kurbatov, A.S., Rabinskiy, L.N. The Generalized Routh Equations in the Plate Theory of (Formula presented.) th Order and their Use in Problems of Normal Wave Dispersion in Heterogeneous Waveguides. Lobachevskii Journal of Mathematics, 2022, 43(7), pp. 2010–2018.
39. Rabinskiy L.N., Pogodin, V.A., Sitnikov S.A. Obtaining a composite material based on quartz woven filler and pyrolysis matrix of organosilicon resin. Periodicals of Engineering and Natural Sciences, 2021, 9(4), pp. 347–356.
40. Fedotenkov G., Rabinskiy, L., Lurie, S. Conductive Heat Transfer in Materials under Intense Heat Flows. Symmetry, 2022, 14(9), 1950.