Improvement of the scientific bases of creating means of automation of documentation of devices of railway automation and telemechanics

Dilshod Baratov[1*] and *Elmurod* Astanaliev[1]

[1] Tashkent State Transport University, 100000 Tashkent, Uzbekistan

Abstract. The scientific principles of improvement of automation information for appliances of automation and telemechanics system consisting of integration of technology of conducting, use of the uniform standard format and reference information, succession of databases of technical documentation information is created. As a result, the possibility of optimal selection and functional completeness of software for monitoring operational and technological processes was created. The principles and methods of building electronic document management systems using the decomposition of the documentation process to a set of elements and their relationships are developed. The system of organization, control and use of technical documents in the field of automation and telemechanics, systematized through the characteristics of the created scenarios and technical documents of device control and their information, is considered.

1 Introduction

The leading positions in the world are occupied by the production of technical means and technologies ensuring the safety of high-speed trains, monitoring the continuity of rolling stock and increasing the efficiency of controlled transportation and technological processes. In this regard, special attention is paid to the automation of the processes of creating a database of technological situations in each link of train control in real time, the automation of technical documentation processes, the implementation of which at each stage of maintaining electronic technical documentation will speed up the accounting of technical documentation in use systems of automated control and management in railway transport [1-6].

In the world, research is being carried out to improve the turnover system of scientific information of railway automation and telemechanics appliances, what is more to automate their reliability and control system. One of the important tasks in this direction, including the development of formal methods for the analysis, synthesis and research of electronic documentation, devices and modular automation tools for the process of detecting elements

* Corresponding author : baratovdx@yandex.ru

of an object based on QR code technology, the development of algorithms and logic for forecasting and determining the order of automation technological work processes based on technical documentation, creating software for automated monitoring and control of technological processes logical operations. At the same time, for appliances in the railway automation and telemechanics system, it is essential to improve a graphic model for computing and management of technical devices positioned on pattern the modern position of computerized record control of technological confirmation [7-10].

Improvement of mechanization appliances for computerized record operation of technological paper using the accomplishments of recent material mechanism and the formation of algorithms and programs that determine the procedure for maintaining technical documentation of system automation and control objects, including in the following priority areas: development of formalized schemes of transport technological processes; development of automation algorithms for transportation and industrial methods established on technological record of mechanization appliances and method operation; formation of operating system for computerized observation and procedure regulate; improvement of a software packet to figure out machinery issues of technological paper control methods.

It is essential to improve models of computerized record operation of technological paper that ensure the efficient usage of computerized record control for automation systems and telemechanics of railways and development of the condition of technological paper associated with computerized record control of mechanization paper. The functional utilization and extensive selection of the automated record operation method is hampered by the lack of a theoretical basis, the concept of structured and accurate use of such systems for JSC “Uzbekistan railways”. In addition, the lack of common standards for the provision of information in electronic form causes great difficulties, which leads to a mismatch of information systems at different levels and the need to develop additional software for implementing application programs. In this regard, formalized research methods for electronic management of technical documentation have not been studied enough, studies on the development of descriptive models and algorithms for creating electronic documentation tools, creating an automated electronic documenting system and solving problems of automation of transport processes.

2 The current state of creation of documentation automation tools and issues of increasing their efficiency

The specificity of automated record control methods is that they are characterized by the software used in them. In view of this, a comparative analysis of electronic document management automation systems is considered. According to the functional properties of computerized record operation methods are presented as a whole, as well as in the sphere of automation and telemechanics of JSC “Uzbekistan railways” [11].

The development and current status of the automated record control method is considered. Based on the analysis, the existing electronic document management systems are classified. In the field of application, electronic document management systems are divided into general-purpose systems and specialized systems.

A comparative analysis of the methods for creating and building software for the automation of electronic document management is presented. The requirements for an automated record operation method for computing and checking of devices are formed.

The paperwork features in the automation and telemechanics sphere of JSC “Uzbekistan railways”, the procedure of computing and operation of railway automation and telemechanics appliances (ACRAT) are presented.

This technology is maintained and monitored using the instrument replacement metering journal. The study of this process showed that each year in the range of signaling and communication Tashkent SHCH-1 there are a large number of cases of operation of expired devices at stations.

To ensure the quality of storage of technical documentation in signaling, centralization and blocking (SCB), it is vital to improve and execute automated methods for the procedure of computing and operation of railway automation and telemechanics appliances.

Automation of the ACRAT process, the formation of an information exchange system and the processing of technical documentation in electronic means should be carried out by developing specialized software packages using adaptation of existing information exchange tools that meet the requirements of signaling device control technology, holding into explanation the explicit of the directorial formation of automation and telemechanics, the standards of connection between the organization of railway transport.

3 Creation of principles and methods of control of automated technical documents

The electronic document of technical documentation (EDTD) model is presented. The formal model [12] of D_T consists of three limited sets and interconnections of the elements of this set: U - a set of participants; P - a set of processes; F - a set of cases of technical documentation with a real range of values.

In this paper, we propose the concept of creating an automated electronic document management system based on the following concepts for the fast and tendency accomplishment of automated record operation in automation spheres for collecting industrial paper for signaling, centralization and blocking appliances:

1. Obtaining information on technical documents and their security.
2. Method of control and automation of production of technical documents.
3. The principle of adding, naming and version control.
4. The principle of collection, data use and storage point.
5. The principle of free text search.
6. The principle of automatic conversion.
7. The principle of integrated document management.
8. The principle of built-in regulatory compliance.

A structure is proposed for the exchange of information between databases of technical documentation created in various organizations (Fig. 1).

This is a database of technical documentation created in various organizations, at distances and in the management of signaling and communications, in other organizations that produce signaling devices, and, finally, it is an industrial database of technical documents for projects and technological processes. The conceptual model allows you to create a generalized formalized scheme (GFS) that describes all the objects of railway automation and telemechanics included in electronic document management [13, 14]. A generalized formalized scheme allows you to formalize all the processes of electronic documentation corresponding to different levels of the hierarchy.

GFS allows storage, synthesize and evaluate technical documentation and ensure data compatibility with software, automated record control and the quality of mechanization paper.

The matrix method of computerized record operation of technological document corresponds to the synthesized GFS, which provides and evaluates the effectiveness of electronic document management and the quality of technical documentation (TD) for various EDTD organization options.

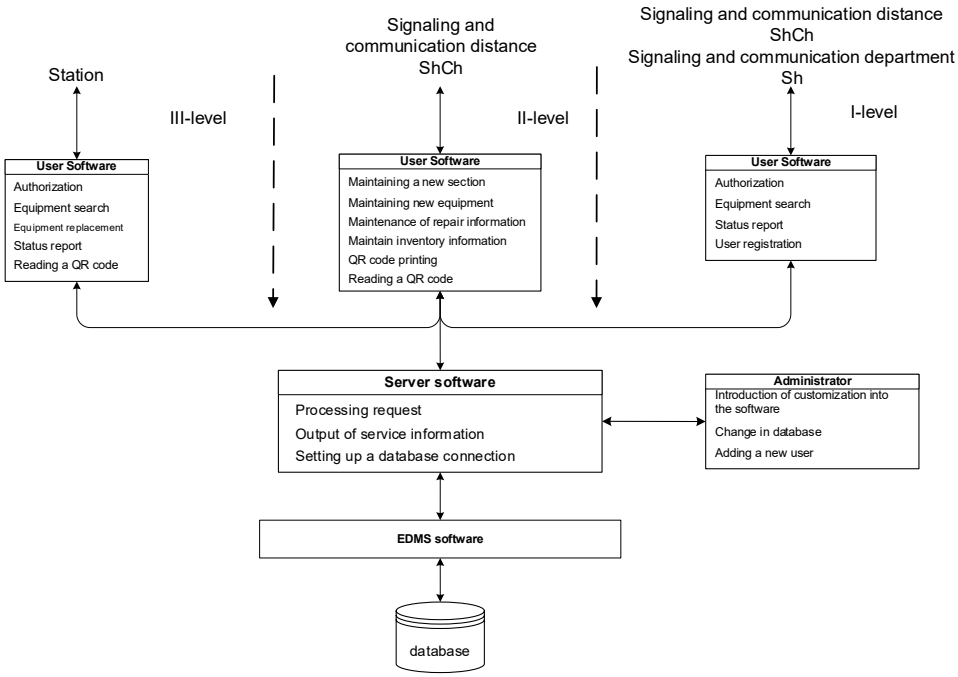

Fig. 1. Information exchange scheme in the automated record control method

The consistent structure of GFS EDTD allows describing the processes occurring in the elements of high-tech high-level chains, synthesizing the logical chains of the algorithms that make up their algorithms, taking into account the effectiveness of the EDTD system under consideration, the quality of the technical documentation being created and processed and the productivity of the component software.

The hierarchical form of algorithms provides the necessary level of detail of elementary operations for each process.

The hierarchical structure of the description of EDTD can be expressed using the matrix method of modeling EDTD and combine the processes of EDTD by organizing the interaction of several matrices in one model in accordance with a sequential or hierarchical structure.

At the stage of formalization of the process, the ACRAT process technology is studied in detail to build a formalized scheme and link parameters to each other. The ACRAT study allows us to describe the process in the form of the alphabet of operations of each technological chain. Since the number of operations is quite a lot, a method for combining operations was developed to minimize, and a connection was established between operations and logical conditions. Synthesized graph model EDTD [15-20]. Also minimization of the formalized scheme and matrix schemes of algorithms are considered.

At the automation stage, operational research is conducted on the existing technology of the ACRAT process. Based on the formation of microcommands, and the creation of the TD model, the automated process technology of the ACRAT is synthesized.

4 Formalized methods of analysis, synthesis and study of automated record circulation of technical documents

Established the EDTD method, a diagram method of automated record control of mechanization paper of devices, the procedure of computing and operation of automation

and telemechanics appliances is developed, based on formalized methods of the electronic document management process, methods are developed minimizing the state of logical algorithms, matrix circuits for technical documents and algorithms ACRAT [21].

A formalized scheme was developed, including a set of particular algorithms Ag, g = $g=\overline{1,G}$ of the ACRAT process. Algorithms Ag, g = $g=\overline{1,G}$ are synthesized based on an analysis of the state of existing modern electronic document management technologies.

Algorithms are assigned numbers in accordance with the sequence of execution Ag, g = $g=\overline{1,G}$. Given the characteristics of the participants in the process, the ACRAT algorithms are given indices *Aq,g* (Fig. 2).

A method of computerized record operation of technological document is compiled on the basis of data sets. For a set of states *F*, a graph vertex is selected; for a set of process *P*, graph edges are selected. The proportion in which the vertex of the diagram coincides to one detail of the position *F* is selected; one element of point *P* coincides with the edge of the chart; one vertex of the graph coincides to one unit of the position of rules *F*; one edge of the chart coincides to one unit of the set *P*.

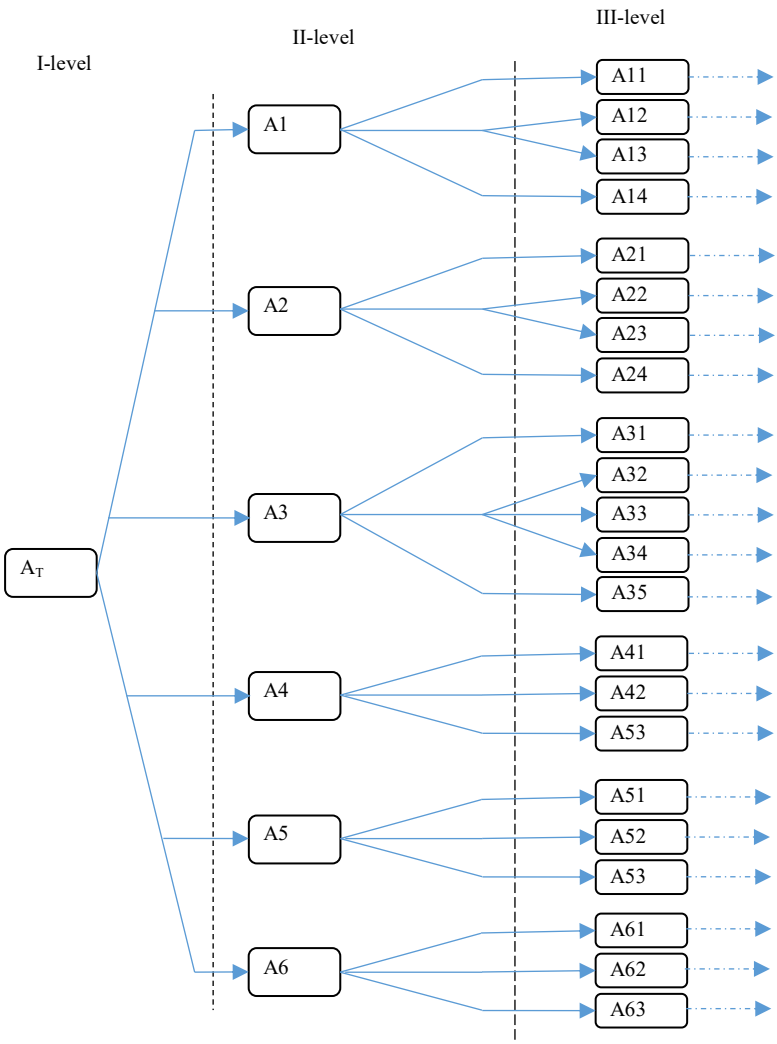

Fig. 2. Algorithmic level of the process ACRAT

Imagine a graph of workflow of mechanization paper in the form

$$G = (V, E, \Gamma)$$

where *V* is the set of graph vertices, *E* is the set of graph edges, *G* is the set of relationships.

The term graph theory method is applied to the process of processing technical documents. In this case, the workflow directions that occur correspond to the graphic directions. (Fig. 3).

There are five possible paths on the graph that are denoted by edges:

S1=P1,P4,P5; S2=P2,P10; S3=P1,P3,P10;

S4=P1,P3,P6,P7,P8,P9,P10; S5=P1,P2,P6,P7,P8,P9,P10.

	F1	*F2*	*F3*	*F4*	*F5*	*F6*	*F7*	*F8*	*F9*	*F10*
P1		$U_{1,2}$								
P2				$U_{1,4}$						
P3				$U_{2,4}$						
P4			$U_{2,3}$							
P5										$U_{3,10}$
P6						$U_{4,6}$				
P7							$U_{6,7}$			
P8						$U_{7,6}$				
P9				$U_{6,4}$						
P10										$U_{10,10}$

Fig. 3. Count transitions of the technological process of maintaining technical documentation of railway automation and telemechanics

The specified paths correspond to workflow scenarios.

ACRAT will be described using a formalized description language. The language of logical diagrams of algorithms (LDA) is introduced as a language for location algorithms for the functioning of software operation appliances. The process of computing and operation of railway automation and telemechanics appliances is illustrated as follows:

$$pg \in P, g = \overline{1, G}$$

where, p_g is the device (device), the set *G* forms the set of devices *R*.

Instrument parameters are also determined:

$$Hg, m \in Hg, m = \overline{1, M}$$

$p_{g,m}$ – *m* the parameter of the device p, the set M of parameters of the devices forms the set H_g of all the studied parameters of the device (each m parameter is entered in its position).

Definition 1. *The Ag algorithm is a set of operations performed during a consequence of particular performances and confirmation of logical positions in the method of* ACRAT.

Definition 2. *Workflow O_p is the first step in registering and monitoring device information in this collection. All operations performed in the process of accounting and control $s_g \in S$ are organized in the set O = {Op}, p = (1, P). This process index Op, p = (1, P) is the number of the content organization and algorithm, and the result display sequence shows its individual number.*

As a consequence of the evaluation of the method comprised in the ACRAT at all levels, an LDA of the form:

$$\begin{gathered} A_T = A11 \downarrow^3 A12k1A21A22\alpha_1 \uparrow^1 A23\alpha_2 \uparrow^2 k1A13\omega \uparrow^3\downarrow^1 k2 \downarrow^2 A24 \\ \alpha_3 \uparrow^4 k3A14k1A41A42k6A43k7A51A52A53k7A61A62A63k1A32 \\ \omega \uparrow^5\downarrow^4 A31 \downarrow^5 A33A34k4k5A35 \downarrow^k \end{gathered} \tag{5}$$

where $\alpha_1, \alpha_2, \alpha_3$– logical positions, the expectation of which depends on the contemporary rate of the quality indicator ACRAT.

In the course of research, methods for specifying LDA were developed.

We represent the LDA A_T (5) using the logical conditions (LC) function:

$$A_T = f_1(\alpha_1\alpha_2\alpha_3)Z_1 \vee f_2(\alpha_1\alpha_2\alpha_3)Z_2 \vee \ldots \vee f_8(\alpha_1\alpha_2\alpha_3)Z_8 \tag{6}$$

where, $Z_1, Z_2, \ldots, Z_8$ value after the LC function.

A general form has been created:

$$A_T = \sum_{m=1}^{M} f_m(\alpha_1\alpha_2\alpha_3)Z_m \tag{7}$$

where, $m = \overline{1, M}$.

In the logical circuit (6), the order of execution of the operators depending on the values of the LC will be as follows:

1) if $\alpha_1 = 0, \alpha_2 = 0, \alpha_3 = 0$, then *k2A24A31A33A34k4k5A35*;
2) if $\alpha_1 = 0, \alpha_2 = 0, \alpha_3 = 1$ then *k2A24 k3A14k1A41A42k6A43k7A51A52A53k7A61A62A63k1A32A33A34k4k5A35*;
3) if $\alpha_1 = 0, \alpha_2 = 1, \alpha_3 = 0$ then *k2A24A31A33A34k4k5A35*;
4) if $\alpha_1 = 0, \alpha_2 = 1, \alpha_3 = 1$ then *k2A24k3A14k1A41A42k6A43k7A51A52A53k7A61A62A63k1A32A33A34k4k5A35*;
5) if $\alpha_1 = 1, \alpha_2 = 0, \alpha_3 = 0$ then *A23A24A31A33A34k4k5A35*;
6) if $\alpha_1 = 1, \alpha_2 = 0, \alpha_3 = 1$ then *A23A24k3A14k1A41A42k6A43k7A51A52A53k7A61A62A63k1A32A33A34k4k5A35*;
7) if $\alpha_1 = 1, \alpha_2 = 1, \alpha_3 = 0$ then *A23k1A13A12k1A22*;
8) if $\alpha_1 = 1, \alpha_2 = 1, \alpha_3 = 1$ then *A23k1A13A12k1A22*.

The truth table of A_T is presented in table 1.

Table 1. The truth table of A_T for three LC with the designation of the same parts of the LDA

#	LDA	Highlight element	The name of the common part of the LDA
0	*k2A24A31A33A34k4k5A35*	*k2*	L1
1	*k2A24k3A14k1A41A42k6A43k7A51A52A53k7A61A62A63k1A32A33A34k4k5A35*	*k2*	L2
2	*k2A24A31A33A34k4k5A35*	*k2*	L1
3	*k2A24k3A14k1A41A42k6A43k7A51A52A53k7A61A62A63k1A32A33A34k4k5A35*	*k2*	L2

4	*A*23*A*24*A*31*A*33*A*34*k*4*k*5*A*35	*A*23	L1
5	*A*23*A*24*k*3*A*14*k*1*A*41*A*42*k*6*A*43*k*7*A*51*A*52*A*53*k*7*A*61 *A*62*A*63*k*1*A*32*A*33*A*34*k*4*k*5*A*35	*A*23	L2
6	*A*23*k*1*A*13*A*12*k*1*A*22	-	L3
7	*A*23*k*1*A*13*A*12*k*1*A*22	-	L3

We construct a transition table for this LDA (Table 2). The assignment of reproachful the LDA AT is to determine the minimal position of conditions with the tiniest quantity of LCs, allowing obtain all output values.

Table 2. LDA conversion table A_T

$\alpha_1\alpha_2$		00	01	10	11
α_3	0	*k*2L1	*k*2L1	A23L1	L3
	1	*k*2L2	*k*2L2	A23L2	L3

So, from Table 2 we obtain the condition function $f(\alpha_1\alpha_2\alpha_3)$ for LDA A_T:

$$f = \alpha_2\alpha_3 \vee \alpha_1\overline{\alpha_3} \vee \overline{\alpha_1\alpha_3} \tag{8}$$

By performing the minimization, we obtain the following result:

$$f = \alpha_2\alpha_3 \vee \overline{\alpha_3}(\alpha_1 \vee \overline{\alpha_1}) = \alpha_2\alpha_3 \vee \overline{\alpha_3} \tag{9}$$

The proposed LDA A_T minimization method allows one to obtain output values when finding the minimum set of terms with the smallest number of LCs.

5 Mathematical description of the procedure of computing and operation of automation and telemechanics appliances

Based on the development of the created logic diagrams of the algorithms in the ACRAT system process, the block diagram of the automated method of technical documents is included, the micro-commands related to the logic diagram of the algorithms of technical documents are systematized and the tasks of the system machine are simplified. The stages of accounting for devices and their control are important in the field of railway automation and telemechanics.

A set of process states S is a set of all steps that have access to information by a document in the field of a simulated workflow. Using workflow notation, this definition is written as follows: {S} ≡ {F}.

The initial states enter into a common set of states. The set of initial states s_0 is a subset of *S*. Since, according to the developed model {S} ≡ {F}, it can be argued that s_0 is a subset of {F}.

Let us establish the correspondence between the set of processes P from the notation of EDTD and the set of transition functions F. When constructing an automaton model of EDTD to define the set F, we use the corresponding elements of the set P: {F} ≡ {P}.

In the described model, an identity is established between the alphabet of the EDTD automaton and the set of participants: ({A} ≡ {Y}).

After the synthesis of the model {U, P, F}, we can construct an automaton model of EDTD, which will be determined by the set

$$M = (A, S, Z, s_0, F, E)$$

where A is the input alphabet; S is the internal alphabet; Z is the output alphabet; - initial condition; H is the transition function, which is determined by the transition table and defines the mapping of two sets $A \times S \rightarrow S$; E is the function of the outputs, which is determined by the table of outputs and sets the display $A \times S \rightarrow Z$.

The structure diagram of a formalized model of technical documentation is developed using a micro-program machine (MM). The proposed structural diagram of a formalized model of technical documentation consists of a matrix of external micro-operations M1, a matrix of internal micro-operations M2, a matrix for generating the code for the following micro-command M3.

Each external micro-operation state $Z_{V_{qg}}$ system control process operator and internal state $Z_{\alpha_{qg}}$ is a logical condition of management to each α_{qg} conditions for determining state values are defined ($\alpha_{qg} = 1$; marked with a + sign) or when the condition is not met ($\alpha_{qg} = 0$; marked with a - sign). Shows a defined scheme for determining process value in process structural states $Z_{\alpha_{qg}}$ the condition under investigation (fig. 4).

Each external micro-operation $Z_{V_{qg}}$ is an operator that controls, and the internal $Z_{\alpha_{qg}}$one is a logical condition (α_{qg}), its values ($\alpha_{qg} = 1$; indicated by a + sign) fulfilling or not fulfilling a condition (with a designation $\alpha_{qg} = 0$; -). In the structural structure of the state of the process, a diagram is created, and the circuit that performs the task to determine the result of the checked condition is defined (Fig. 4).

Process firmware, i.e. the stage of micro-operations in the process is described in a meaningful way in LDA language, and system external micro-operation $Z_{V_{qg}}$ is the status is associated with the operator system V_{qg}, and state internal micro-operation $Z_{\alpha_{qg}}$ the process will be associated with a logical state α_{qg}.

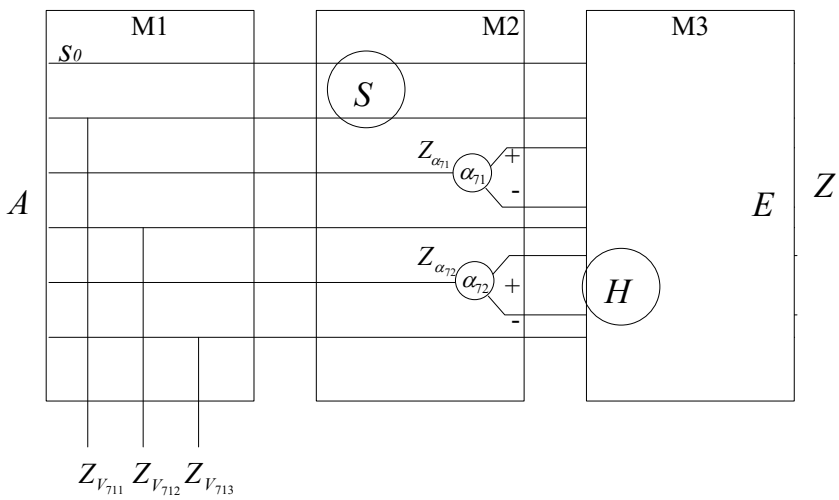

Fig. 4. A graphic diagram of the systematized model of the technical document process was created

In the organization of multi-process operation, any micro-instruction includes only one micro-operation (state external or internal) and during each micro-clock contains only one operator or logical process condition. The number of internal system states of the MM is determined in relation to the values of the elements of the LDA. The size of the matrices M1 and M2 depends on the value of the operators in the LDA state and the conditions of the logical system. In a certain case, when the LDA consists only of operators, the matrix

M2 does not exist. In this case, the number of consecutive micro-commands is always systematically generated in the M3 matrix [22].

A logical value in the case of LDA is determined by conditions, If it is necessary to determine the matrix in the state M2, in this case they will be created $Z_{\alpha_{qg}}$. With a false value of the checked in the $Z_{\alpha_{qg}}$ conditions in the logical state (if it enters the LDA without inversion), the order of formation of the elements in the LDA state is violated.

Simplification of the MM state circuit can be obtained by simultaneous analysis of external and internal micro-operations. After that, the number of micro-commands of MM is determined not only by the values of LDA elements, but also by the number of groups of micro-operations created at that moment. In LDA A71, 6 such groups are systematically distinguished:

$$A71 = \underbrace{V_0 V_{711} V_{712} V_{713} V_{714} \downarrow^{717} V_{715} V_{716} V_{717} \downarrow^{715} V_{718} \alpha_{711} \uparrow^{711}}_{1} \underbrace{V_{7110} V_{7111} \overline{\alpha_{712}} \uparrow^{712} \downarrow^{711} V_{719} \omega \uparrow^{715}}_{2} \tag{11}$$

$$\times \underbrace{\downarrow^{712} \downarrow^{714} V_{7115} \alpha_{713} \uparrow^{713} V_{7116} \alpha_{714} \uparrow^{714}}_{3} \underbrace{V_{7117} \omega \uparrow^{716}}_{4} \underbrace{\downarrow^{713} V_{7118} \omega \uparrow^{717}}_{5} \underbrace{\downarrow^{712} V_{7112} V_{7113} V_{7114} V_k}_{6}$$

then, In the case of MM, there are six internal system-based states.

Each maximally corresponding group of LDA elements can be interpreted as a separate micro-command. Such a micro-command consists of a set of internal and external microoperations, but simultaneously with a certain set of values of logical conditions, a microoperation is performed that is included in only one branch of the micro-command.

Any internal process state software is associated with one compatible group of Mi LDA elements. If the first element of the group Mj is the follower of one of the elements of the group Mi, then in MM it is necessary to switch from the internal state to another. In this case, MM performs the specified LDA.

To get the corresponding group M_{Y_i} (that is, the group that is the first element), an LDA element Y_i is written. If there Y_i is one follower (i.e. Y_i an operator), then it is transferred to the right. If there are two followers, a branch will be organized, and each of them will be written to the right of a separate branch Y_i. This process is repeated for newly assigned group items in each branch.

If the group M_{Y_i} includes the last LDA operator or if you want to enter an LDA element that does not correspond to at least one element of this branch, or if you need to record Y_j the entry in another branch of the group M_{Y_i}, then the group Y_l direction will be disabled. In the second case, you need to put the arrow Y_j to Y_l. The formation of the group ends after the collapse of all its branches.

If the first group does not include all elements of the LDA, then the second group will be formed, starting with the smallest element in the LDA, not included in the previous group. Thus, the process is repeated until each LCA element is included in at least one group.

In the case of LDA, the process of systematic generation of A71 micro-commands is considered:

$$A71 = V_0 V_{711} V_{712} V_{713} V_{714} \downarrow^{717} V_{715} V_{716} V_{717} \downarrow^{715} V_{718} \alpha_{711} \uparrow^{711} V_{7110} V_{7111}$$

$$\downarrow^{716} \overline{\alpha_{712}} \uparrow^{712} \downarrow^{711} V_{719}\omega \uparrow^{715} \times \downarrow^{714} V_{7115}\alpha_{713} \uparrow^{713} V_{7116}\alpha_{714} \uparrow^{714} V_{7117}\omega \uparrow^{716} \quad (12)$$

$$\downarrow^{713} V_{7118}\omega \uparrow^{717} \downarrow^{712} V_{7112}V_{7113}V_{7114}V_k$$

Definition 3. *In a joint LDA group, immediate sequential elements are combined.*

We form the maximum groups of elements corresponding to tools of LDA A71. We take the operator V_0 and assign his follower to the right:

$$V_0 \rightarrow [\alpha_{711}]$$

Since α_{711} the system is defined as the division of the operator into states V_0, the branch terminates on the previous element (i.e., V_0), and α_{711} is indicated in square brackets. For this reason V_0 had one follower, the group M_{V_0} consists of one operator V_0, i.e.

$$M_{V_0} = \{V_0 \rightarrow [\alpha_{711}]\}$$

Statement 1. *The elements indicated in square brackets in the joint group are not included in this group, but are the initial elements of other groups.*

We will make the most compatible groups. In this case, the upper arrow $\Big|^{\rightarrow}$ after α_{qg} will mean that $\alpha_{qg} = 1$, and the lower $\Big|_{\rightarrow}$ $-\alpha_{qg} = 0$.

$$M_{V_0} = \{V_0 \rightarrow V_{711} \rightarrow V_{712} \rightarrow V_{713} \rightarrow V_{714} \rightarrow V_{715} \rightarrow V_{716} \rightarrow V_{717} \rightarrow V_{718} \rightarrow [\alpha_{711}] \quad \}$$

$$= \left\{ \alpha_{711} \left| \begin{array}{l} \&^{\rightarrow} V_{7110} \rightarrow V_{7111} \rightarrow \alpha_{712} - \left| \begin{array}{l} \&^{\rightarrow}[V_{719}] \\ \&_{\rightarrow} V_{7112} \rightarrow V_{7113} \rightarrow V_{7114} \rightarrow V_k \\ \&_{\rightarrow}[V_{719}] \end{array} \right. \end{array} \right. \right\}^{M_{\alpha_{711}}}$$

$$M_{V_{719}} = \{V_{719} \rightarrow \omega^{715} \rightarrow V_{718} \rightarrow [\alpha_{711}] \quad \}$$

$$M_{\alpha_{713}} = \left\{ V_{7115} \rightarrow \alpha_{713} \left| \begin{array}{l} \&^{\rightarrow} V_{7116} \rightarrow [\alpha_{714}] \\ \rightarrow [V_{7118}] \end{array} \right. \right\} \quad (15)$$

$$= \left\{ \alpha_{714} \left| \begin{array}{l} \&^{\rightarrow} V_{7117} \rightarrow \omega^{716} \rightarrow \alpha_{712} - \left| \begin{array}{l} \&^{\rightarrow}[V_{719}] \\ \&_{\rightarrow} V_{7112} \rightarrow V_{7113} \rightarrow V_{7114} \rightarrow V_k \\ \rightarrow V_{7115} \rightarrow [\alpha_{713}] \end{array} \right. \end{array} \right. \right\}^{M_{\alpha_{714}}}$$

$$M_{V_{7118}} = \{V_{7118} \rightarrow \omega^{717} \rightarrow V_{715} \rightarrow V_{716} \rightarrow V_{717} \rightarrow V_{718} \rightarrow [\alpha_{711}] \quad \}$$

Six corresponding groups of LDA elements were obtained. Let us compare each of the six compatible groups with the maximum micro-command, i.e., the internal state of MM. In this case, we obtain the structural diagram of MM shown in Fig. 5, a. It can be seen from the structural diagram of MM that there are intersecting micro-commands, since the same LDA element is in different micro-commands. The reason for this is the resulting micro-command system significantly exceeds the system is the number of operators and logical state conditions that occur in the initial LDA. About this time, it is clear that the micro-command system that triggers the MM circuit can be precisely defined.

Thus, the amount of these LDA elements cannot serve as a sign of the complexity of the MM circuit. The complexity of the MM scheme is determined by another LDA, which is called extended and is designated as.

Definition 4. *An advanced LDA is compiled according to the existing micro-command system, and the number of its elements is exactly equal to the value of the operators and logical conditions in the state micro-instructions process.*

If in the initial LDA there are no duplicate elements, then in the extended LDA the same elements can be repeated several times.

To obtain the microcommand system (12), the extended LDA will have the form:

$$U^{A71} = V_0 V_{711} V_{712} V_{713} V_{714} V_{715} V_{716} V_{717} V_{718} \downarrow^{715} \downarrow^{717} \alpha_{711} \uparrow^{711} V_{7110} V_{7111} \downarrow^{716} \overline{\alpha_{712}} \uparrow^{712} \downarrow^{711} V_{719} V_{718}$$
$$\omega \uparrow^{715} V_{7115} \downarrow^{714} \alpha_{713} \uparrow^{713} V_{7116} \alpha_{714} \uparrow^{714} V_{7117} \omega \uparrow^{716} \downarrow^{714} V_{7115} \omega \uparrow^{714} \downarrow^{713} \quad (16)$$
$$V_{7118} V_{715} V_{716} V_{717} V_{718} \omega \uparrow^{717} \downarrow^{712} V_{7112} V_{7113} V_{7114} V_k$$

This expanded LDA contains 24 elements instead of 18 elements in the original LDA (12).

Definition 5. *Depending on the specified compatibility conditions for the elements of the LDA and the selected method of forming microcommands from the same LDA, various systems of microcommands and, therefore, various extended LDAs can be obtained.*

Definition 6. *The MM circuit is built according to the micro-command system. Each MM scheme corresponds to its own LDA, the same LDA will correspond to a whole set of MM schemes.*

Therefore, to assess the complexity of the MM scheme, usage is appropriate extended LDA.

We turn to the system of microcommands obtained (16), and make some changes, defining and repeating the common parts of some microcommands. As a result, we can get a system of microcommands:

$$M_{V_0} = \{V_0 \to V_{711} \to V_{712} \to V_{713} \to V_{714} \to \downarrow^3 V_{715} \to V_{716} \to V_{717} \to \downarrow^1 V_{718} \to [\alpha_{711}] \}$$
$$M_{\alpha_{711}} = \left\{ \alpha_{711} \left| \begin{matrix} \&^{\to} V_{7110} \to V_{7111} \to [\alpha_{712}] \\ \&_{\to} [V_{719}] \end{matrix} \right. \right\}$$
$$M_{\alpha_{712}} = \left\{ \alpha_{712} - \left| \begin{matrix} \&^{\to} [V_{719}] \\ \&_{\to} V_{7112} \to V_{7113} \to V_{7114} \to V_k \end{matrix} \right. \right\}$$
$$M_{V_{719}} = \{V_{719} \to 1 \} \quad (17)$$
$$M_{\alpha_{713}} = \left\{ \downarrow^2 V_{7115} \to \alpha_{713} \left| \begin{matrix} \&^{\to} V_{7116} \to [\alpha_{714}] \\ \to [V_{7118}] \end{matrix} \right. \right\}$$
$$M_{\alpha_{714}} = \left\{ \alpha_{714} \left| \begin{matrix} \&^{\to} V_{7117} \to [\alpha_{712}] \\ \to 2 \end{matrix} \right. \right\}$$
$$M_{V_{7118}} = \{V_{7118} \to 3 \}$$

To move to the same parts of the microcommands, numbered arrows are used, as in LDA. Figure 5 shows the MM circuit constructed using this microcommand system.

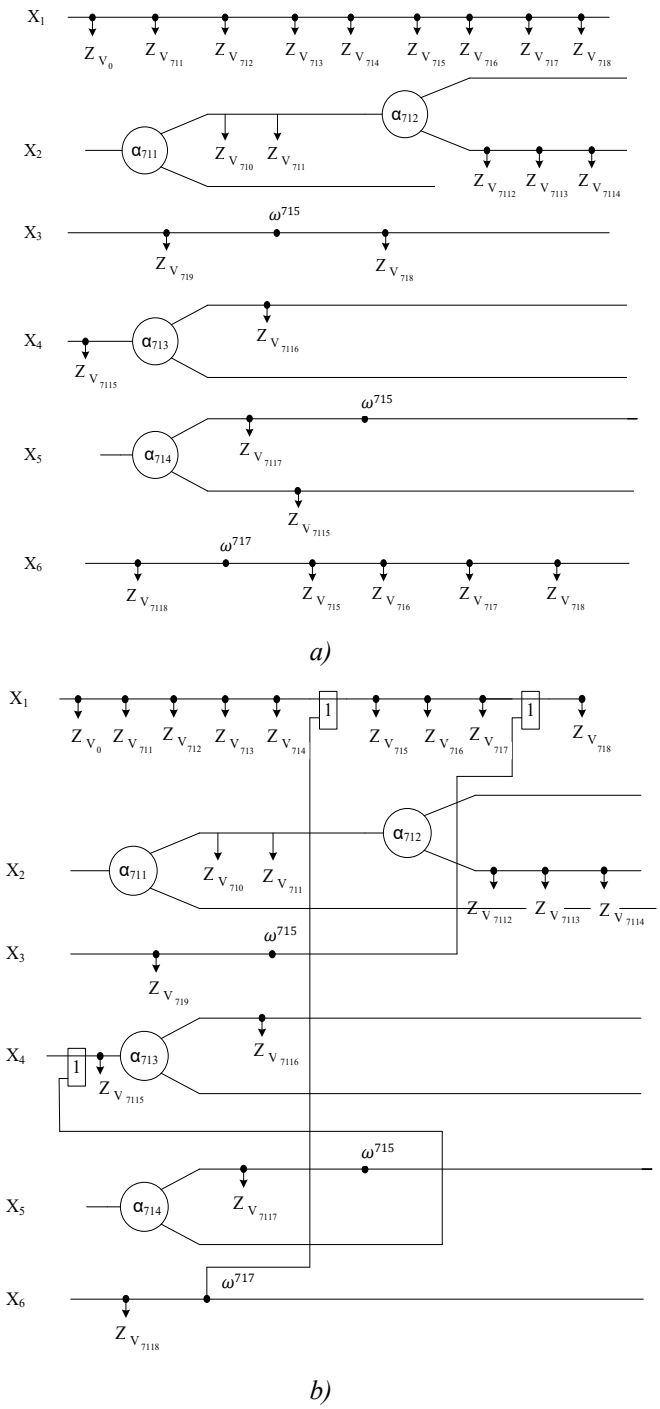

Fig. 5. Structural diagram of MM LDA A71 (a) and the diagram of MM with identical parts of LDA A71 micro-commands (b)

6 Construction and research of a system for automating the documentation of railway automation and telemechanics appliances

Technical documents in the system process are constantly checked, and the state of access to the electronic documentation system "Automated system of accounting and control of railway automation and telemechanics devices" (ASA-CRAT) is checked.

This system complex will be distributed in repair and technological section (RTS) of the signaling and communication distance of JSC Uzbekistan railways using ASA-CRAT servers and a database.

A conceptual model of a computerized method for computing and operation of signaling devices is proposed. The model consists of three levels. At the first level, management and distance managers of Signaling and Communication have access to authorization, equipment search, a report on requests and user registrations.

In the first level, the managers of the W department and the WB distance have access to authorization, equipment search, report on requests and user registration.

At the second level, the RTS engineer has access to maintain a new section, new equipment, information on instrument repair, stock information, printing a QR code of the appliance and scanning it.

In the third stage of the system, the alarm system has the ability to identify the electrician, find the device, replace the device with a new one, provide data results and read the QR code.

It is proposed to use the QR-coding system in the organization of accounting for railway automatic and telemechanical devices, while tracking their movement and operational identification.

The use of QR codes is aimed at improving the quality and efficiency of work on replacing and repairing automatic and telemechanical devices, optimizing and monitoring device maintenance, simplifying technology and accelerating the collection of information about installed devices, and identifying and detecting equipment for troubleshooting (Fig. 6).

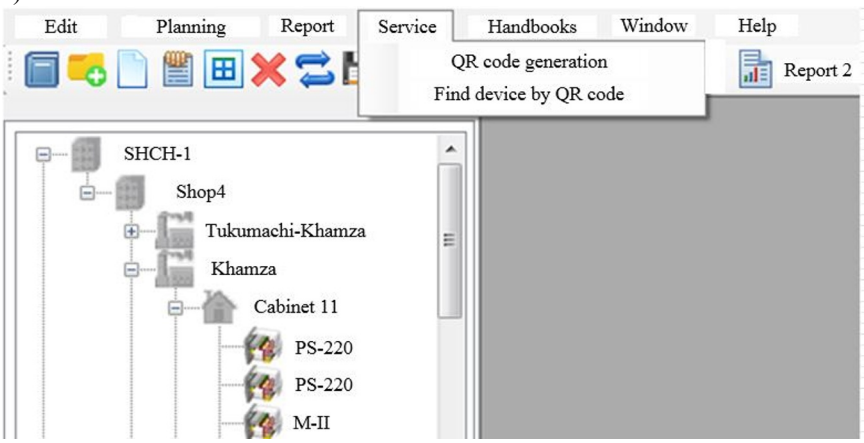

Fig. 6. QR code generation module

It is recommended to use the proposed technology for tracking and accounting of automatic devices and telemechanics using a QR coding system data collection of replacement devices, verify the correctness of device replacement, automatically identify a device for posting information on the repair process and reception, and automatically enter data on new devices received in repair and technological areas.

7 Conclusion

The method of creation of the formalized scheme of electronic document circulation of technical documentation for procedure of the explanation and operation of appliances of railway automation and telemechanics on the foundation of logical schemes of the algorithms providing formalization of procedures of transition to the automated technology is developed. The proposed method allows to obtain the output values of the algorithms using the minimum set of elements with the least number of logical conditions.

A diagram method of automated record operation of mechanical paper is constructed, which counts the division of document flows into a set of participants, process and States. As a result, it is possible to effectively establish acceptable scenarios for the movement of documents in the procedure of computerized record circulation of mechanical paper and describe the likely States of documents and identify possible participants.

The hierarchical scheme of the model providing carrying out operational researches of electronic technical document circulation is defined. In this scheme, built on the basis of an abstract finite automaton, the operators of the pattern of the first level are described as algorithms, and in the matrices of the last level are represented by operations in the alphabet. In this case, it is possible to consider the matrix external and internal micro-operations, and the matrix of forming the code of the next micro-command.

The method of simplification of algorithms with logical schemes allowing simultaneously carry out minimization and coding of the automatic machine taking into account the various requirements connected with document circulation of systems of automatics and telemechanics is developed. This method makes it possible to synthesize the automaton model structures by moving from simple calculated microinstructions to complex functions that encode different states of the automaton while solving micro-operations in the internal process.

Tools for automated monitoring and control of direction in the state of software processes in the registration and control system devices with different operating systems based on the technical data of the devices, as well as with the use of an automated QR-code module have been developed. These tools allow you to implement real production situations, which received 4 certificates of registration of computer programs.

Automated record operation in the form of ASA-CRAT provides the most complete functional support and develops the electronic executive part of the system, taking into account the technical conditions for the content of documentation of automation and telemechanics appliances. The process architecture of an automated system consists of three hierarchical state levels, containing 11 specialized windows: the program window, the login window and 9 working windows that allow you to manage and control the devices.

References

1. S. Stanojevic, D.A. Kaminsky, M. T. Miller, B. Thompson, European Respiratory Journal **60.1** (2022)
2. E. Laviola, M. Gattullo, V. M. Manghisi, M. Fiorentino, A. Uva, The International Journal of Advanced Manufacturing Technology 1-16 (2022)
3. J. Mökander, M. Axente, F. Casolari, L. Floridi, Minds and Machines **32.2,** 241-268 (2022)
4. D. Baratov, N. Aripov, O. Muxiddinov, X. Jumanov, IOP Conference Series: Materials Science and Engineering **918(1),** 012084 (2020)
5. A. Ayaz, Y. Mustafa, Computers in Human Behavior Reports **2,** 100032 (2020)

6. G. Read, N. Anjum, S. Paul, Reliability Engineering & System Safety **188,** 352-365 (2019)
7. O. Strelko, et al. *"Historical milestones of creation of computers technology automated system for passenger transportations management "Express" on the railway transport in the USSR,* in *2019 IEEE 2nd Ukraine Conference on Electrical and Computer Engineering (UKRCON)*. IEEE, 2019.
8. M. Fathurrohman, S. Syamsuri and N. Hepsi, International Conference on Government Education Management and Tourism **1,** 1 (2022)
9. T. Tretyakova, E. Barakhsanova, T. Alexeeva, I. Bogushevich, *"Provision and management of educational activities in the conditions of distance education at the north-eastern federal university"*, In *XIV International Scientific Conference "INTERAGROMASH 2021" Precision Agriculture and Agricultural Machinery Industry (*Springer International Publishing*)* **2,** 869-880 (2022)
10. M. Das, X. Tao, Y. Liu and J. C. Cheng, Automation in Construction **133,** 104001 (2022)
11. D. Baratov, N. Aripov, D. Ruziev, Proceedings of *2019 IEEE East-West Design & Test Symposium (EWDTS),* IEEE, pp. 1-9, September, 2019
12. D. Baratov, *E3S Web of Conferences (E3S),* EDP Sciences **264,** 05052 (2021)
13. C. E. Landwehr, ACM Computing Surveys (CSUR) **13(3),** 247-278 (1981)
14. B. Śnieżyński, R. Szymacha, R.S. Michalski, "Knowledge visualization using optimized general logic diagrams," Proceedings of *Intelligent Information Processing and Web Mining: Proceedings of the International IIS: IIPWM'05 Conference held in Gdansk,* Springer Berlin Heidelberg, pp. 137-145, Poland, June 13–16 (2005)
15. J. A. Smith and J. G. Linders, *"Automatic generation of logic diagrams"* In Proceedings of the 13th Design Automation Conference, pp. 377-391, June (1976)
16. D. Baratov, Transportation Research Procedia **63,** 214-222 (2022)
17. D. Baratov, E. Astanaliev, E3S Web of Conferences, EDP Sciences **264,** 05018 (2021)
18. N. Biggs, E. K. Lloyd, R. J. Wilson, Graph Theory, 1736-1936 (Oxford University Press, 1986)
19. S. Jegelka, Theory of graph neural networks: Representation and learning. *arXiv preprint arXiv:***2204,** 07697 (2022)
20. Y. Shen, J. Zhang, S. H. Song, K.B. Letaief, Graph neural networks for wireless communications: From theory to practice (IEEE Transactions on Wireless Communications, 2022)
21. D. Baratov, N. Aripov, O. Mukhiddinov, K. Jumanov, AIP Conference Proceedings, AIP Publishing LLC **2432(1),** 030010 (2022)
22. D. Baratov, E. Astanaliev, E3S web of conferences **244,** 08024 (2021)