Evaluation of the influence geometric parameters of a cylindrical specimen for tensile adhesion testing of thermally sprayed coating

Andrey Zayatzev[1*], *Albina* Lukianova[2], *Dmitry* Demoretsky[2], and *Yulia* Alexandrova[1]

[1]Moscow Aviation Institute, 125993 Moscow, Russia
[2]Samara State Technical University, 443100 Samara, Russia

Abstract. The problem of calculating the required adhesion strength and the accuracy of measuring the adhesive/cohesive strength of thermally sprayed coatings (thermal barrier, electrically insulating, irradiation) on a cylindrical test specimen is of practical interest from the point of view of improving the reliability of highly loaded parts of internal combustion engines of agricultural machines, various parts of the aerospace and nuclear industries. There have been carried out a set of studies on the application in practice of standard test method for assessing adhesion or cohesion strength of electrically insulation plasma sprayed coating Al_2O_3 on standard and elongated specimens with a diameter of 25 mm in accordance with standards ASTM C633-13, GOST 9.304-87. In order to assess the influence of witness specimen's geometry at common coating adhesion, there were selected 6 types of cylindrical specimens. A finite-element stress analysis was used to evaluate stress-strain state of the two bonded cylindrical specimens of the same geometry with coating by tensile testing. The uniformity of stress distribution at the interface coating/substrate was found for three elongated specimens. Compared to standard tensile testing of a cylindrical specimen, the applied significance of the conducted studies that it is possibility to obtain more accurate experimental data of bond strength. There is also needed further research in the field of determining the most optimal geometry of the witness specimen for evaluating the tensile adhesion strength of thermal spray coating.

1 Introduction

Regardless of the purposes of thermally sprayed coating (thermal insulation, electrically insulation, wear-resistant, anti-friction, corrosion-resistant etc. [1-6]) attaining maximum functional performance with low porosity, high chemical purity is not a sufficient condition for guaranteeing the long product life at insufficient adhesion/cohesion strength. The atmospheric plasma spray (APS) process is widely used to deposit thermal barrier coating (TBC) on conveyor lines of manufacturers of gasoline and especially heavily loaded diesel engines. This is explained by the possibility of extending the service life, increasing

* Corresponding author: skadi221@gmail.com

functional performance, resistance to burnout and reducing thermal gaps. The product life extension of agricultural machinery will ultimately enhance the productivity in agriculture and reduce the cost of maintenance.

Oxide ceramic thermal barrier (ZrO_2–Y_2O_3), wear-resistant/anti-friction (Cr_2O_3, Al_2O_3-TiO_2, TiO_2-Al_2O_3-Cr_2O_3 with graphite or molybdenum disulfide, Cr_2O_3-TiO_2-SiO_2), electrically insulation/irradiation ($MgAl_2O_4$, Al_2O_3) coatings for parts of exhaust channels of the head cylinder block, pistons, combustion chamber and valves of internal combustion engines, aero- and land-based gas turbines, bearings of high-speed spindle of machining centers, electrical insulators in the core area of fusion reactors are deposited mainly using plasma spraying equipment by feeding agglomerated/sintered ceramic powder of a narrow fractional composition directly to exit of a plasma-spraying torch nozzle and rarely into the anode spot of the arc. There is also an alternative technology when the powder material is fed in the form of a suspension (ultrafine powders) [7, 8], but for oxide ceramics it has not become widespread. The application of APS technology in dynamic vacuum (LPPS, low pressure plasma spraying by chamber pressure from 0.5 mbar to 300 mbar [9]) is used in rare cases due to the high cost and complexity of the process, although it can significantly improve the quality of the coating (high adhesion strength, low porosity, increased density) comparable to similar coatings formed by methods high-velocity oxyfuel (HVOF) spraying and detonation gun spraying (DGS) [10].

One important condition to spray dense coating with high adhesion/cohesion strength that the particle in-flight characteristics should be studied focusing on kinetic, thermal energies and the particle trajectories in the plasma flow. The condition for obtaining a good quality thermally sprayed coating is a systematic study of process-microstructure-property relationships [11, 12]. In most cases, designer assign the task to thermal spraying specialists for deposition a coating with the highest possible density, minimal porosity and sufficient mechanical strength, which guarantee the durability of the coating in a given period of operation. On the contrary, to obtain a good quality TBC it is necessary to provide an increased porosity at the level of 8-10% with the required adhesion strength. Regardless of the purpose of the coating, evaluation of the bond strength with substrate on witness sample or part is a standard procedure for the qualification of the technological process.

2 Assessment of tensile adhesion strength

Compared with the conical pin test method, the main feature of tensile adhesion testing on a cylindrical specimen with axial tensile load (Fig. 1,2) is obtaining more uniform distribution of stress at the interface between coating/substrate and the absence of significant bending moment due to the appearance of shear forces on the end face of the test specimen — conical pin with matrix (Fig. 2).

The differences in the methods are due to the scale effect of a separation area of the specimens from substrate (nominal diameter of the cylindrical specimen — d=25 mm, nominal small diameter of the conical pin — d=2 mm) and the impossibility of increasing diameter of the conical pin due to fracture mechanisms of a coating. The lacks of clue method (tensile adhesion testing on a cylindrical specimen) are the ultimate tensile strength (60—80 MPa) of epoxy adhesives (polyamide-epoxy) and possibility penetration of adhesive to a substrate of thin coating $h_c \leq 150$—200 μm at elevated temperatures above 70—100 °C which makes in most cases the testing be non-applicable for HVOF, DGS ductile/brittle coatings. According to the results of tensile bond strength [3], the FM1000 Adhesive Film glue manufactured in the form of thin cylindrical plates with a diameter of 1 inch and modified by using a special silver-based filler can be substituted by the technology of induction brazing for assessing the tensile bond strength of thermal spray metallic coating like Inconel 718 over 150 MPa. The average tensile bond strength of a standard

polyamide-epoxy adhesive like Permobond ES550 is $\overline{\sigma_{ten}}$=60±3,3 MPa with shear bond strength $\overline{\sigma_{sh}}$=43 MPa. This value of bond strength may be limitation for ceramic oxide coatings deposited by APS equipment [11, 12].

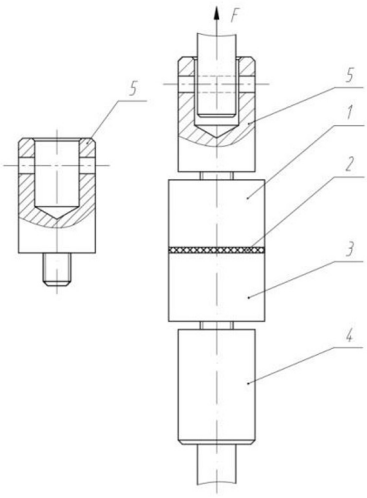

Fig. 1. Standard self-aligned test fixture for tensile adhesion testing on a cylindrical specimen: (1) First halve of witness specimen; (2) Coating, epoxy; (3) Second halve of witness specimen; (4, 5) Equipment for tensile testing.

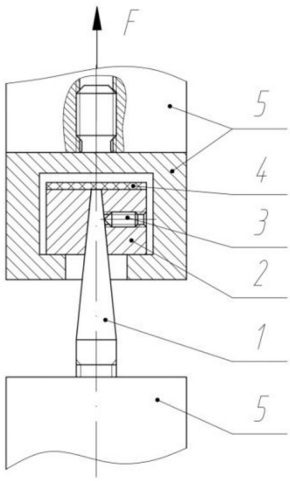

Fig. 2. Standard self-aligned test fixture for tensile adhesion testing on a conical pin (witness specimen): (1) Conical pin; (2) Matrix; (3) Centering screw; (4) Coating; (5) Equipment for tensile testing machine.

The results of a previous investigation of tensile bond strength [11-15] have been shown the strong influence of geometric parameters of a cylindrical specimen on bond strength. The variation of adhesion/cohesion strength is primarily associated with a diameter of the

top end — d and the height of a cylindrical test specimen — h_{sp}. The diameter of a cylindrical specimen usually ranges from 20 to 80 mm, the height be used from 16 to 50 mm. According to GOST 9.304-87, ASTM C633-13 (2017), EN ISO 14916:2017, JIS H8666:1994, in practice the most widespread diameter of the top end is d=25 mm / d=1'=25.4 mm. In accordance with GOST 9.304-87, the minimum height of a cylindrical sample is 16 mm. Among the most widespread standards ASTM C633-13 (2017), EN ISO 14916:2017, the height is h_{sp}=25 mm / h_{sp}=1'=25.4 mm.

The idea of increasing the cylindrical specimen height from the standard values 16—25 mm is associated with the influence of a threaded hole on a stress distribution at the interface between substrate and coating/bond coating. Taking into account the Saint-Venant' s Principle that the stress measured at any point on an axially loaded cross-section is uniform by far enough moving away from the point of load application. Therefore, the stress and strain may be decreased if it is possible to get tensile (plain) stress conditions at the boundary layer. It should be taken into account that close location the most extreme point of threaded hole to detachment boundary of the coating by the coating failure may lead to a remarkable reduction rigidity of the standard cylindrical specimen and increase the non-uniform distribution of stresses at the bonding interface. Thus, in terms of the uniformity of stress distribution there is obviously a positive effect to increase the height of test specimen while maintaining the depth of the threaded hole without modification.

3 Analysis of stress distribution during tensile loading

In order to optimize the geometrical parameters of a standard cylindrical specimen for measuring adhesion strength standardized in ASTM C633-13 (2017), EN ISO 14916:2017 and assessing the degree of a non-uniform stress distribution at bonding interface during testing, there have been performed the finite element method (FEM) calculations of stress-strain distribution of the two finite-element models (Fig. 3) by using ANSYS R16.2 program.

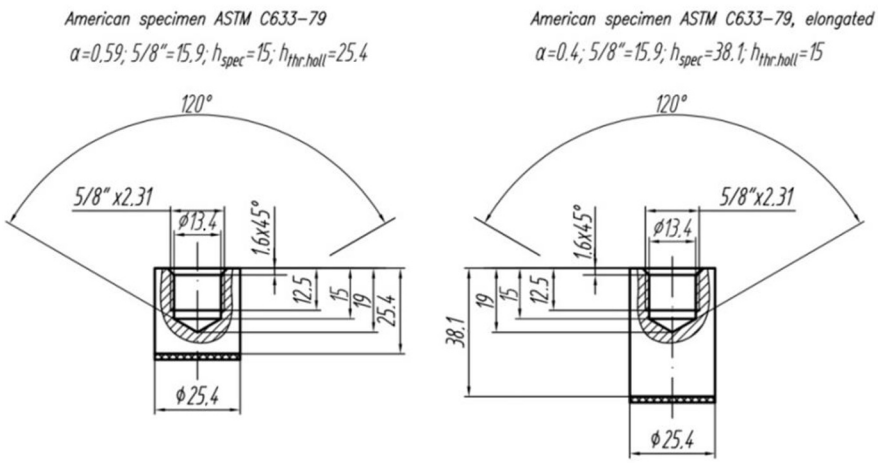

Fig. 3. Two cylindrical specimens for calculation of stress-strain distribution.

The statement of a science task included examining the impact of witness specimen height on the degree of a non-uniform stress distribution in bonded cylindrical specimens with APS coating — Al_2O_3. The focus of this work was a controlled parameter — the ratio

coefficient of specimen heights (scale factor, height of witness specimen h_{spec} to length of threaded closed hole $h_{thr.holl}$

$$\alpha = \frac{h_{thr.holl}}{h_{spec}}. \quad (1)$$

The ratio coefficient of witness specimen heights was $\alpha = 0.4$ for modified variant of a cylindrical specimen (Fig. 3). The follow assumptions were made for simplifying the finite-element models:

- the bonding between coating and substrate set as rigid connection without any defects;
- material of substrate (construction steel) and coating undergo only elastic strain;
- axisymmetric is given by a cyclic region in the form of a $1/4$ model by imposing boundary conditions in the form of symmetry regions along the XOY and YOZ planes;
- epoxy layer doesn't include in the model due to its small thickness compared with coating.

The mechanical properties of coating and substrate have been taken from the material library of ANSYS R16.2 program. The finite-element grid nearest the interface coating/substrate was 0.1 mm by the thickness of coating h_c=0.35 mm. Finite element modeling was carried out by applying an uniaxial tensile load F_N=14000 N to the model.

The equivalent stress distribution of a standard and an elongated specimens calculated by finite element modeling have been shown the strong non-uniform stress distribution at the coating for a standard witness specimen (Fig. 3). The stress distribution by tensile loading at the coating Al_2O_3, calculated from the finite-element modeling, is shown in Fig. 4 for standard and elongated specimens defined by the ASTM C633-13 (2017) standard.

The modeling results (Fig. 4) are in good agreement with similar works [14] on the investigation of stress distribution at the thermally sprayed coating by shear/tensile loads. It should be noted, that all elongated specimens have been shown similar dynamic of stress distribution along the plane of delamination and in the volume of coating. Moreover, a significant decrease of the range of stress variation from minimum to peak values may be also a positive fact in terms of tensile testing.

4 Conclusions

Finite-element analysis have been shown the possibility of abrupt changes in stress-strain distribution at the debonding interface of a standard cylindrical specimen while laboratory testing. A comparative analysis of finite-element modules have been demonstrated a significant level of stresses fields alignment under tensile force F_N=14000 N to the models both at the coating/substrate interface and along the coating thickness by increasing height of the specimen (Fig. 3). The effect of stress alignment at the coating/substrate interface was achieved through the elongated specimen (1.5 times height of standard specimen, ASTM C633-79). According to procedure for determine bond strength of thermally sprayed coating, there is a need to estimate the impact of another geometric parameters on tensile strength like outside diameter, diameter of thread, thread location.

So, there are 3 most obvious stages of changes in the geometry of a cylindrical specimen:

- increasing the height of a cylindrical specimen 1.5─2 times while maintaining the diameter and depth of the threaded hole without changes;
- increasing the diameter of the top end surface up to 40─60 mm;
- transferring of the thread to the outer cylindrical surface.

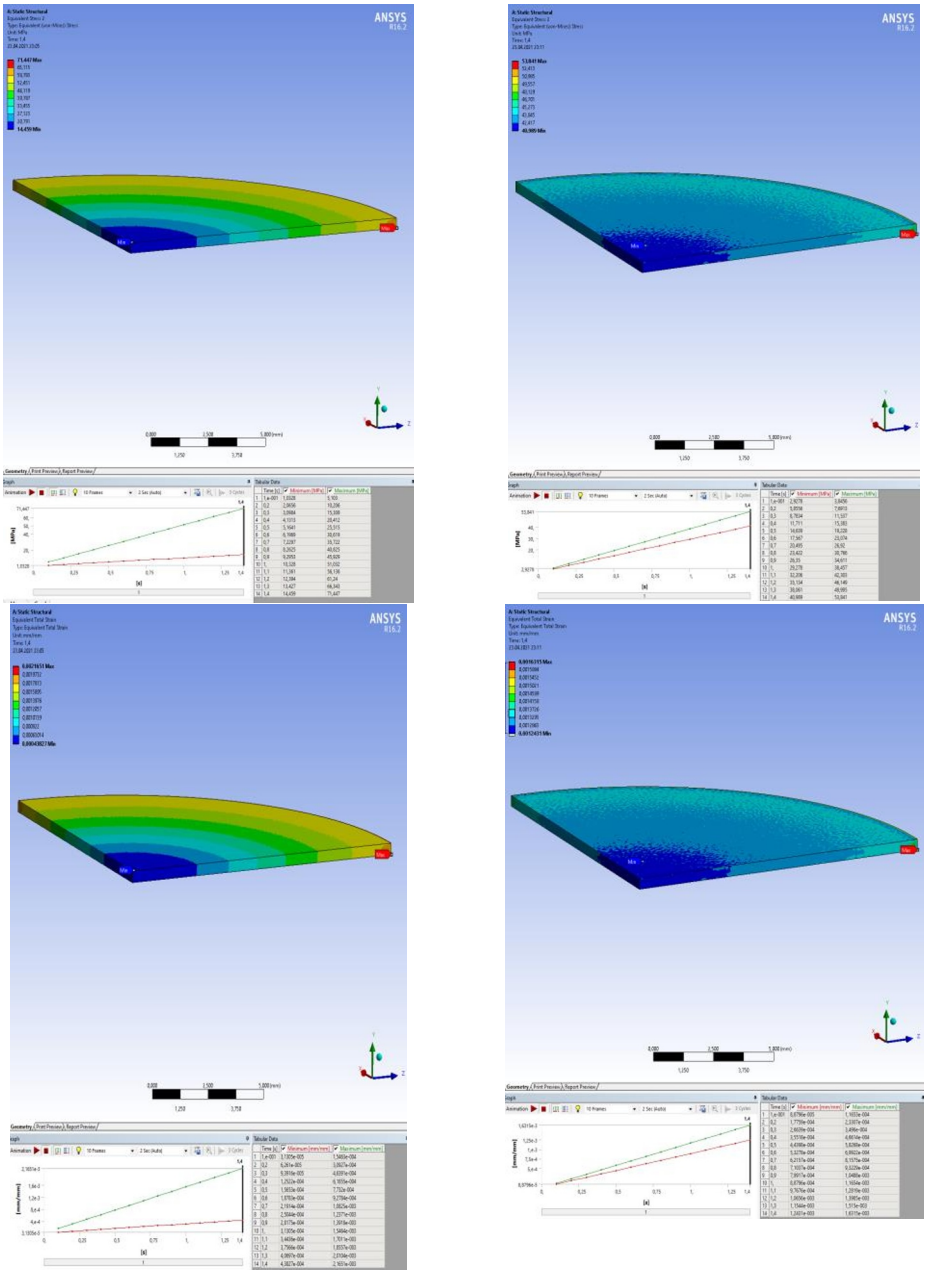

(a) standard specimen (b) elongated specimen

Fig. 4. Equivalent stress distribution and total strain at the debonding region of the coating Al_2O_3 and substrate by tensile force F_N=14000 N for standard ASTM C633-79 specimen and elongated specimen

References

1. V. Kolganov et al., Fusion Engineering and Design **146(Part B)**, 2474-2478 (2019) https://doi.org/10.1016/j.fusengdes.2019.04.022

2. A. S. Kononenko, I.Yu. Ignatkin, A.V. Drozdov, Polymer Science – Series D **15(2)**, 137-142 (2022) https://doi.org/10.1134/S1995421222020113
3. C. Lyphout, P. Nylen, L.G. Östergren, , J. Therm. Spray Tech. **21(1)**, 86-95 (2012) https://doi.org/10.1007/s11666-011-9689-y
4. K.V. Gavrilov et al., J. of Friction and Wear **41**, 480-485 (2020) https://doi.org/10.3103/S1068366620050104
5. O. Finidi, A.A. Kostryukov, A.V. Schedrin, and I.Yu. Ignatkin, Trib. in Ind. **43(1)**, 1-11 (2021) https://doi.org/10.24874/ti.1000.11.20.02
6. C-X. Li, C-J. Li, and G-J. Yang, J. Therm. Spray Tech. **18(1)**, 83-89 (2008) https://doi.org/10.1007/s11666-008-9287-9
7. M. Aghasibeig et al., J. Therm. Spray Tech. **28**, 1579-1605 (2019) https://doi.org/10.1007/s11666-019-00904-x
8. Praxair, Surface technologies. https://www.praxairsurfacetechnologies.com/en/coating-services/application-processes/thermal-spray/suspension-plasma-spray, 2022. Accessed 25 June 2022
9. A. Refke, G. Barbezat, J.L. Dorier, M. Gindrat, Ch. Hollenstein, Characterization of LPPS processes under variousspray conditions for potential applications, International Thermal Spray Conference 2003, May 5-8, 2003 (Orlando, USA), pp. 1-8.
10. A.N. Zaytzev, Yu.P. Aleksandrova, A.G. Yagopolsky, BMSTU Journal of Mechanical Engineering **5**, 48–59 (2021) https://doi.org/10.18698/0536-1044-2021-5-48-59
11. M. Hadad et al., J. Surface Engineering **23(4)**, 279-283 (2007) https://doi.org/10.1179/174329407X215159
12. G. Marot et al., Surf. Coat. Tech. **202(18)**, 4411-4416 (2008) https://doi.org/10.1016/j.surfcoat.2008.04.018
13. C.C. Berndt, J. Materials Engineering **12**, 151-158 (1990)
14. W. Han, E. F. Rybicki, J.R. Shadley, J. Therm. Spray Tech. **2(2)**, 145-150 (1993)
15. M. Hadad et al., J. Surface Engineering **23(4)**, 279-283 (2007) https://doi.org/10.1179/174329407X215159