Hypothesis of the dimensional-geometric scheme of the Nabta-Playa megalith landscape monument

Alexander Shatalov[1*]

[1]Don State Technical University, Gagarin square 1, Rostov-on-Don, 344000, Russia

Abstract. The study aimed at identifying a scheme of dimensional and geometric relation-ships that could applied to a famous megalithic monument called "calendar circle", located in the archaeological area of Nabta Playa. In the revealed sizes, there are repetitions of some prime numbers. A special role in all these cases belongs to the prime number 37, which may be is connected with the sequence of numbers of the "Dome Algorithm" (1, 2, 3, 5, 7, 9, 13, 17, 21, 29, 37, ...) , identified by the author earlier and having a cosmographic sense. Similar dimensional and geometric regularities repeatedly revealed by the author earlier. In particular, one can note in this sense the famous megalith Ales Stenar in Sweden and the Sun Boat of Pharaoh Cheops. The results obtained in this article allow us to state that the creators of "small calendar circle" of Nabta Playa were familiar with both the methods of exact geometric constructions and the ancient Egyptian linear measures system.

1 Location and features of the object under study

Landscape design is currently a very popular field of activity among both designers and customers. Hence, the interest of theoretical researchers in the analysis of the compositional features of modern works arises (see, for example, [1-3]. However, the author of this article believes that the analysis of the compositions of the most ancient landscape compositions is of no less interest, although from somewhat different positions.

The analyzed in this study megalithic composition (often called the "calendar circle" and "Nabta Playa Stone Circle") is located in an archaeological area of considerable interest for research for several decades. This archaeological area (Nabta Playa basin) located in Northeastern Africa (in the south of modern Egypt, about 100 km west of Abu Simbel and 800 km south of Cairo). Systematic studies of this vast area started in the mid-1970 s. This area believed to have re-occupied after the dry period of the Pleistocene era, this re-occupation occurred approximately in the tenth millennium BC, the period of this settlement is called the early Neolithic of the El Adam type (Fred Wendorf, Romuald Schild, "Nabta Playa and Its Role in Northeastern African Prehistory", journal of anthropological archaeology 17, 97-123, 1998). "Nabta Playa basin offers an unprecedented longitudinal view on the emergence, consolidation and complexification on

* Corresponding author: shatalov_iarhi@mail.ru

human–livestock relationships, from the early stage of the Early Holocene (c. 11,000 cal. B.P.) to 6000 B.P." (ibid).

Numerous publications are devoted to the research of this archaeological area, in particular, very known such as [4-9].

Of particular interest is the archaeo-astronomical aspect. For example, the articles [8, 9] discusses possible archaeo-astronomical interpretations of the location of megaliths.

It also discusses hypothetical dates of the alignment of megalithic lines (4820 BC and 6270 BC). However, in article, based on the analysis of satellite images of the archaeological area, it concluded that in this case the alignment should performed earlier, around 8000 BC.

The hypothesis of "three-star asterism" (meaning Orion's Belt) is widely known too, which is often associated with three characteristically located stones in the "small calendar circle" of Nabta Playa.

For our part, we would like to note some similarities between the "small calendar circle" of Nabta Playa and the diagrams of the megaliths of England (Woodhenge, Borrowstone Rig and Clive), which are given by J. E. Wood (Wood J. E., "Sun, Moon and standing stones", 1978, reference to the work of Alexander Thom). This is especially true for Clive (Fig. 1).

Both objects characterized by "egg-shaped" outlines of the plan and the orientation of the compositional axis approximately from the southwest to the northeast, their proportions are also similar. However, the sizes of the objects differ significantly.

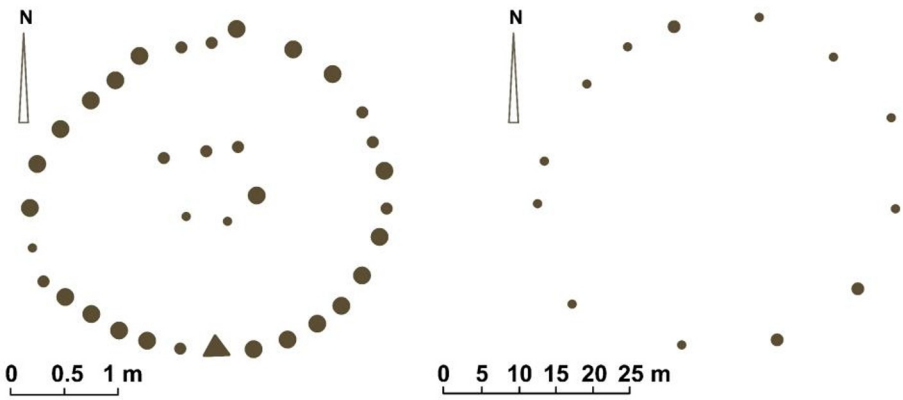

Fig. 1. Location of stones of Nabta Playa Circle megalith (left) and of the Clive megalith stones (right). Drawings made based on materials from https://i.pinimg.com/originals/05/78/33/0578330ff0e08ece3cb40af0e53e4b4f.jpg and from Wood J. E., "Sun, Moon and standing stones".

2 Justification of the applied methodology

2.1 "Dome Algorithm" and pseudo-Pythagorean triangles

The beginning of the methodology laid by the author almost 30 years ago, but the first short message in English published only in 2007 [10].

The "Dome Algorithm" is a specific sequence that occurs during extrapolation of Orthodox "the canon of cupolas", it include the numbers 1, 2, 3, 5, 7, 9, 13. The sequence was continued with the addition of 2n to the previous term, with an increase in the value of n by 1 after each third step, etc.

That is, the increment was constant for every 3 steps and increased by 2 times before each 4th step (we assume 0 as the initial sequence number, and initial n=0 too).

The result of this extrapolation: 0, 1, 2, 3, 5, 7, 9, 13, 17, 21, 29, 37, 45, 61, 77, 93, so on. Next, the distribution of non-zero terms in three columns was made, and the values of the 3rd column were increased by 7. As a result, we have the 4th column with numbers corresponding to the Titius-Bode law, with a factor of 10 (see Table 1 for a fragment of the system).

Table 1. The "Dome Algorithm" integers and data of Titius-Bode law

The Dome Algorithm integers			**(+7)**	**Titius-Bode data**	**Planets**
1	2	3	10	1.0	Earth
5	7	9	16	1.6	Mars
13	17	21	28	2.8	Ceres (dwarf planet, from asteroid belt)
29	37	45	52	5.2	Jupiter
61	77	93	100	10	Saturn
…					

Pay attention to the integers in the columns of the Dome Algorithm (29, 37, 45), referring to the row of Jupiter, the largest planet in the solar system.

This is the first of the reasons that led the author of the article to identify the structural dimensions of ancient architectural and landscape monuments, multiples of 37.

The second reason is some proportional features of the pyramid of Cheops, identified by the author. The semi-profile of its cross-section is proportionally close to two pseudo-Pythagorean triangles at once, with sides 23, 29, 37.01… and 29, 37, 47.01… (Fig. 2).

The third reason is the unexpected correspondence of the multiplicity to the prime number 37 of the height of the Cheops pyramid. It can interpreted with high accuracy in linear measures, almost indistinguishable from the traditional English foot: 37 × 13 × 0.3048 m = 146.6088 m. The resulting value well combined with interpretation in ancient Egyptian royal cubits: 146.6088: 280=0.5236029 m.

The topic related to ancient linear measures will receive additional coverage in the next subsection. It is noteworthy that the perimeters of these triangles reduced to integers are also prime numbers: 23+29+37=89 and 29+37+47=113.

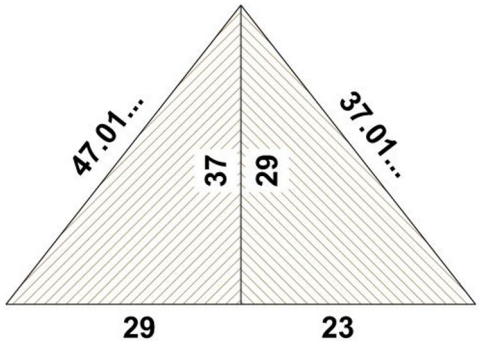

Fig. 2. Proportional correspondence of the semi-profile of the Pyramid of Cheops to the pseudo-Pythagorean triangles {23, 29, 37.01…} and {29, 37, 47.01…}.

However, any integers, and even more so round numbers, also not be ignored by us in the subsequent analysis. The specified methodology already been applied by us earlier on several occasions, the results, in particular, can be found in the publication [11].

2.2 Ancient Egyptian linear measures and the possibility of their correction

Practically well known that the ancient Egyptian system of linear measures based on the Royal cubit (Meh, Mh Nswt), the revealed dimensions of which are in the range of 0.523-0.524 m (the latter value given by Petrie, this is a result of measuring the King's chamber: W. M. F. Petrie, "The Pyramids and Temples of Gizeh").

Royal cubit was subdivided into 7 palms, each of which was divided into 4 djebas (fingers), thus one Meh contained 28 fingers. Among the many other measures that were part of the system associated with the Royal cubit, there was also an ancient Egyptian foot-zereth, equal to 2/3 of this cubit.

According to the author of the article, it is possible to obtain more accurate values of the just mentioned (as well as others related to them) ancient Egyptian linear measures.

However, here we will have to resort to some assumption, which at first glance may seem very strange due to its anachronism, but, as will be shown below, the accuracy of the dimensional-geometric relationships makes this assumption very likely, and this will also be confirmed by analysis of the compositional geometry of the "calendar circle" of Nabta Playa.

Our assumption will be that in ancient Egypt there was an unofficial, and, apparently, secret, priestly linear measure, practically indistinguishable from the modern meter. To prove this statement, we construct a trivial circle with a radius of 1 m and divide the length of this circle into 12 parts (see Fig. 3 below).

The length of one arc segment will be 0.52359878 m, which can rounded as 0.523599 m, or, somewhat less accurately, 0.5236 m.

Then one zereth (2/3 from Royal cubit) will be equal to 0.3490659 m, and one djeba (1/28 from Royal cubit) will be equal to 0.0187 m (18.7 mm). These values further applied in this article in the subsequent dimensional-geometric analysis.

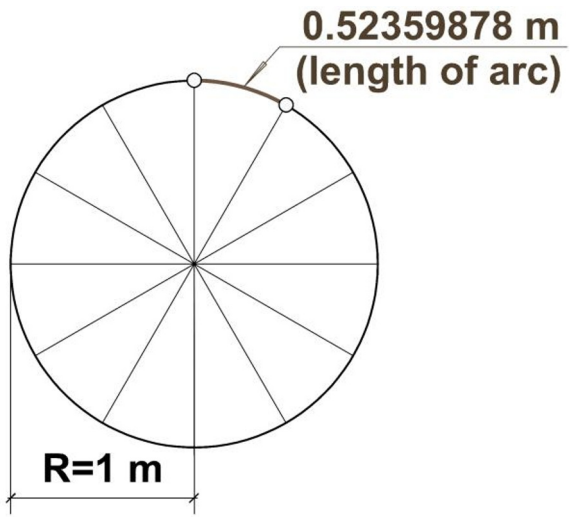

Fig. 3. Splitting the circle R=1 m into 12 parts gives an arc length of about 0.5236 m.

3 Dimensional and geometric features of the "small circle" of Nabta Playa

We now turn to the main topic of this article. Taking into account the reliability of the geometric construction just described in 2.2 (see Fig. 3 and comments to it), we may note that a well-"drawn" fragment of a circle with stones has a diameter well interpreted as 3 meters. This value of diameter be the initial hypothesis of our further analysis (Fig. 4). Next, in the constructed circle (O_1, Ø = 3 m), we enter a right angle rotated in accordance with the longitudinal axis of the megalith (points B, A, C, see Fig. 4.). From the obtained points B and C, we construct symmetrically segments at angles of 53 ° to their intersection (point D, note that it is somewhat distant from the stone designated as S).

The distance from O_1 to S is very close to 2×37=74 "English" inches, let take this size as hypothetical. A test of such a hypothesis can be the identification of distances from S to any points in our scheme, for example, very significant in composition points: B and C. We obtain with excellent accuracy BS=SC=5×13×37= 2405 mm (relative error 0.000098), see Fig. 4.

We proceed to the second stage of the composition formation, for which we will perform arcs conjugated to the circle O_1 from point D (Fig. 5, left). The centers of these arcs are pp. O_2 and O_3.

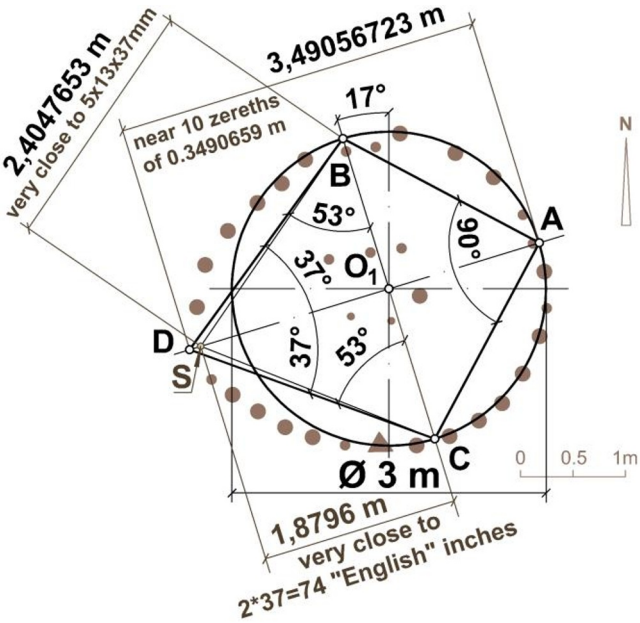

Fig. 4. The first stage of constructing the hypothesis of the dimensional-geometric composition of the "small circle" of Nabta Playa: a quasi-rhombic scheme using angles 90º, 53º and 37º.

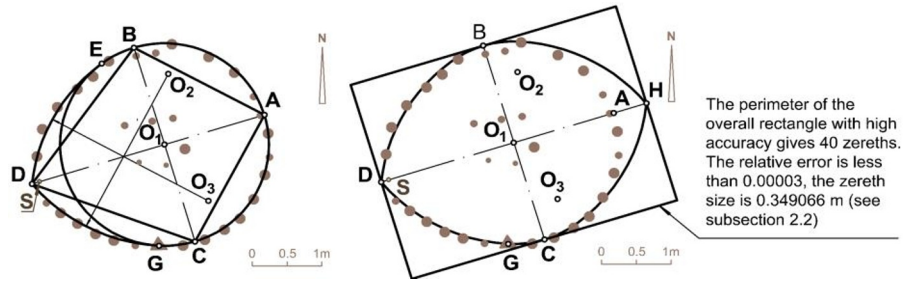

Fig. 5. The second (left) and third (right) stages of the development of the dimensional-geometric composition: the construction of additional arc fragments (left) and the addition of a ship-shaped outline with a dimensional rectangle. The perimeter of this rectangle, with unprecedented precision, is 40 zereths.

The resulting conjugation points are E and G (the latter coincided with the stone of a special, triangular form).

At the third stage, we create a symmetrical composition, using segment BC as an axis of symmetry and get a ship-shaped outline (Fig. 5, right). Next, we build its overall rectangle. Now we get an excellent result for its perimeter: it with very high accuracy gives 40 zereths, relative error is less 0.00003, the applied zereth size is 0.349066 m (see subsection 2.2).

Another way to identify the geometric composition may be to connect to the formation of the outline of point S. In this case, we should build another arc, conjugating the previously constructed DC and DB arcs.

As the center of the conjugating arc, we take a point O_4 on the axe of composition, postponing from point O_1 a distance of 259 cm, 259=7×37 (Fig. 6).

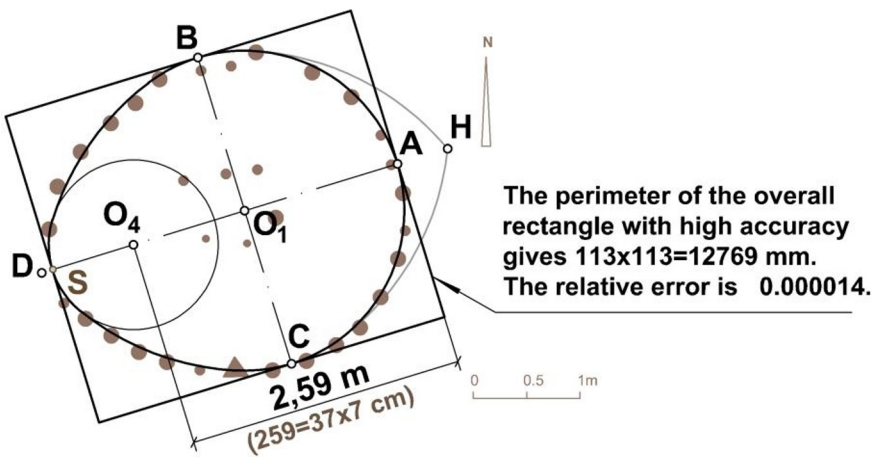

Fig. 6. The egg-shaped outline. The perimeter of the overall rectangle with high accuracy gives 113×113=12769 mm. The relative error is 0.000014.

The perimeter of the resulting overall rectangle of this egg-shaped outline turns out to be equal to 12769 = 113 ×113 mm. 113=29+37+47 , (see subsection 2.1, “Dome Algorithm” and pseudo-Pythagorean triangles”, Fig. 2.

Recall that it was about the semi-profile of the pyramid of Cheops.

Now, taking into account the results obtained, we can assume:

A) Builders of the "small circle" of Nabta Playa had a very developed geometric knowledge.

B) The units of measurement used in the dimensional-geometric composition of the "small circle" are identical to the ancient Egyptian metrological system, which, in our opinion, should also include those measures that are now called English, and metric.

References

1. A. M. Vorobyeva. *Evolution of Landscape Architecture*, in Materials Science Forum 931, pp. 856-861 (September 2018)
2. E. Goryacheva, I. Vlasova, *Ecodesign and Videoecology in the Landscape and Architectural Environment of the City*, Current Trends. XV International Scientific Conference “INTERAGROMASH 2022”, in Lecture Notes in Networks and Systems, pp 810-818 (2023)
3. G. Ekinil, A. Petrenko, *An Innovative Approach to the Formation of Landscape Architecture of Hotels in the Rostov Region*, XV International Scientific Conference “INTERAGROMASH 2022”, in Lecture Notes in Networks and Systems book series (LNNS, volume 575) pp 1389–1399 (2023)
4. F. Wendorf, R. Schild: *Geomorphology, Lithostratigraphy, Geochronology and Taphonomy of Sites*, in Holocene Settlement of the Egyptian Sahara, pp 11–50 (2001)
5. F. Wendorf, R. Schild, *Combined Prehistoric Expedition’s Radiocarbon Dates Associated with Neolithic Occupations in the Southern Western Desert of Egypt, Geochronology and Taphonomy of Sites*, in Holocene Settlement of the Egyptian Sahara, pp 51–56 (2001)
6. A. E. Close, Site E-77-7 Revisited: The Early Neolithic of El Adam Type at El Gebal El Beid Playa, in Holocene Settlement of the Egyptian Sahara, pp 57–70, (January 2001)
7. A. E. Close, Sites E-91-3 and E-91-4: The Early Neolithic of EI Adam Type at Nabta Playa, in Holocene Settlement of the Egyptian Sahara, pp 71–96 (2001)
8. J. Malville, R. Schild, F. Wendorf, R. Brenmer, *Astronomy of Nabta Playa*, in African Cultural Astronomy, pp. 131-143 (2008)
9. T. Brophy, P. Rosen, *Satellite Imagery Measures of the Astronomically Aligned Megaliths at Nabta Playa*, Mediterranean Archaeology and Archaeometry, pp 15-24 (January 2005)
10. A. A. Shatalov, *The Cupola Algorithm" data and "the modulation-37": the natural sciences aspect and the using for analysis of ancient layouts*, in European journal of natural history, №1, p. 35 (2007)
11. A. Shatalov, *Size-Geometric Regularities of Landscaped Monument Ales Stenar*, in XV International Scientific Conference “INTERAGROMASH 2022”, Lecture Notes in Networks and Systems book series (LNNS, volume 575) pp 469–476 (2023)