Method for applying vehicle driving cycles to assess the durability of electromechanical transmissions of trucks

Valeriy Grinin[1*], *Evgeniy* Shkarupelov[1], *Aleksandr* Muravev[1], *Aleksandr* Kartashov[1], *Sergey* Nazarenko[2], and *Aleksandr* Klimov[3]

[1] Bauman Moscow State Technical University, 105005 Moscow, Russia
[2] PJSC "KAMAZ", Transport Passage, 420000 Naberezhnye Chelny, Republic of Tatarstan, Russia
[3] LLC "Innovation Center "KAMAZ", 121205 Moscow, Russia

Abstract. The article discusses the relevance of the problem of calculating the elements of electromechanical transmissions of trucks for strength and durability. The main methods used for the formation of load conditions on electromechanical transmissions of trucks are given. The driving cycles of trucks used to obtain loads when calculating the durability of the elements of electromechanical transmissions are given. The universal driving cycles of vehicles obtained on the basis of the collection of statistical data on the movement of trucks are considered. A simulation model of the movement of a truck used to determine the loads on the electromechanical transmission while overcoming driving cycles of trucks is presented. The durability of the gears of the electromechanical transmission of a truck is analyzed on the basis of load cyclograms obtained during simulation modeling of movement. Numerical results of the safety factors of one of the gear stages are obtained. Conclusions are drawn about the optimality of the use of existing driving cycles of trucks in strength calculations. Conclusions are worded about the need to synthesize driving cycles of trucks based on the collection of statistical data on the movement of truck vehicles on the territory of the region under consideration.

1 Introduction

Currently, it is impossible to imagine the existence of the infrastructure of cities and regions without the use of various types of cargo vehicles, in particular, truck vehicles for transporting construction goods, servicing trade enterprises, long-haul trucks, garbage trucks. According to [1], in the modern world, 20-30% of pollutant emissions come from transport, and these emissions have an important impact on global warming and climate change. One of the trends in the development of vehicles in order to reduce the harmful effects of exhaust gases on the environment is the transfer of transport to electric traction.

* Corresponding author: grinval@bmstu.ru

Electromechanical transmissions are widely used on truck vehicles, in particular, mechatronic axles, which are independent transmission units and include, as a rule, traction motors, gearbox, wheel-hub assemblies with braking mechanisms and integrated traction inverters.

Transmissions of trucks perceive significant shock and vibration loads, require effective cooling of highly loaded elements and depend on the human factor during careless driving and excessive pressure on the accelerator pedal, which, together, leads to a decreasing in the reliability and service life of gears and bearings. Increasing the service life and ensuring the durability of the transmission elements of a truck is one of the most urgent tasks.

At the design stage, truck driving cycles are widely used to assess the strength and durability of transmissions and its individual elements [2-4]. The driving cycles of trucks are a set of data describing the behavior of vehicles in a city or region, which serve to assess the loads on the transmission and powertrain elements of a truck, as well as to assess fuel consumption and, as a result, to measure environmental pollution by a truck. Currently existing driving cycles, as a rule, take into account only certain regions and classes of roads. To assess the strength, driving cycles of vehicles are most often used for urban traffic conditions, where low average speed and high non-constant loads prevail, or for trunk routes, where a steady traffic mode prevails, characterized by high average speed and low load on the transmission.

An analysis of the movement of trucks depending on the geographical conditions and the characteristics of the roads of the region in which the truck is operated has become available due to the technical capabilities of using the GLONASS navigation system. When assessing the loading of electromechanical transmissions, it is important to take into account the driving conditions of a truck as accurately as possible, which will increase the efficiency of its operation by minimizing the mass and dimensions of the electromechanical transmission.

The development of modern computational methods, data collection and analysis systems currently makes it possible to assess the loads of transmission units and assemblies with high accuracy. Before the advent of these systems and methods, various theoretical methods were used to assess the loads of the transmission. The method of relative mileage has become the most widespread, which is based on the use of the results of experimental studies of load conditions in transmission parts under various operating conditions and finding common patterns of changes in the values, duration and amplitude of changes in power factors inherent in certain classes of wheeled vehicles.

When determining the parameters of load conditions, the movement of a wheeled vehicle on roads of various profiles is evaluated. The cyclogram of the loads on the transmission parts has a random character and can be described by the distribution curves of the obtained torques over the driving time (mileage). The number of such curves is determined by the number of modes of operation of the truck. To obtain the dependences of moments on time, the calculation method presented in [5-8] was used.

The method of calculating relative mileage assumes that the speed of the truck is described by the normal distribution law.

Relative mileage when switching on low γ_L and relative mileage when switching on low γ_H is calculated according to the following dependencies:

$$\gamma_{Li} = n_{ti} \cdot F_i \cdot k_t$$
$$\gamma_{Hi} = 1 - \gamma_{Li} \tag{1}$$

where n_{ti} – share of transmission operation time in low gear under various road and dirt conditions; F_i – difference between two adjacent values of the areas of the distribution curve,

k_t – a coefficient that takes into account the influence of the traction qualities of a wheeled vehicle on the nature of the speed distribution curve and relative mileage on the gears.

For determining the parameters of the distribution curve of specific traction forces for each of the modes, the number of which will be determined by the number of gears and the road surface, calculate the maximum traction forces due to the coupling of the driving wheels $p_{\varphi i}$ and the capabilities of the electric motor p_{di}

$$p_{\varphi i} = \frac{G_s \cdot \varphi_i}{G} \tag{2}$$

where $p_{\varphi i}$ – ultimate traction force due to the coupling of the driving wheels; G_s – coupling weight or the component of the weight that falls on the driving wheels; G – total weight of the machine; φ – adhesion coefficient.

$$p_{di} = \frac{T_{e\max} \cdot u_{tri} \cdot \eta_{tri}}{G \cdot r_r} \tag{3}$$

where p_{di} – ultimate thrust force due to the capabilities of the electric motor; $T_{e\max}$ – maximum torque of the electric motor; u_{tri} – gear ratio of the gearbox with the i-th gear engaged; η_{tri} – transmission efficiency with i-th gear engaged; r_r – wheel rolling radius.

The required moment is calculated from the calculated traction force p_{ki} on the drive wheels in the i-th gear

$$p_{ki} = \min(p_{\varphi i}, p_{di}) \tag{4}$$

$$T_i = p_{ki} \cdot G \cdot r_r \cdot \frac{\Theta}{u_{di} \cdot \eta_{di}} \tag{5}$$

where Θ – coefficient that takes into account the increase in torque due to the possible circulation of parasitic power when the drive is blocked; u_{di} – gear ratio from the gearbox shaft to the shaft of the driving wheels of the vehicle when the i-th gear is engaged; η_{di} – coefficient of efficiency from the gearbox shaft to the shaft of the driving wheels of the vehicle when the i-th gear is engaged.

Among the existing standardized driving cycles of vehicles, the WLTP (Worldwide Light duty Test Procedure) and HWFET (Highway Fuel Economy Test) cycles are most widely used [9]. WLTP is the most objective cycle that takes into account data on the movement of passenger cars collected around the world, provides an opportunity to obtain data based on real driving conditions, provides high speed performance for cars of categories M1 and N1. The HWFET cycle describes the movement along the highways, characterized by a small number of braking, high average speed.

The WLTP cycle, which is most widely used in the European Union, is used in testing passenger cars to determine environmental and fuel efficiency and describes trips in both urban and highway conditions with high speed performance. The HWFET cycle has become widespread in the United States of America (USA) and is used in testing trucks moving on highways to determine fuel efficiency. Both driving cycles of vehicles do not allow to estimate with high accuracy the movement of trucks with electromechanical transmissions moving along mixed routes, covering frequent traffic both in urban conditions and long-term traffic on highways in the territory of the Russian Federation.

To form such driving cycles of vehicles, within the framework of the current study, full-scale tests and collection of statistical data on the movement parameters of trucks with an axle load of 11.5 tons, in particular, semi-trailer trucks KAMAZ-54901 (Fig. 1a) and trucks KAMAZ-5325 (Fig. 1b) operated to perform the logistics tasks of "Russian Post" JS. The collection of traffic statistics was carried out for several dozen trucks of each model, traffic

routes cover both traffic within the densely populated areas of Moscow and the Moscow Region, as well as regional routes, highways throughout the Russian Federation. The time period for recording motion parameters varies from 1,5 months to 1 calendar year. Using a set of measuring sensors and tools, the following movement parameters were recorded: the movement time, taking into account the time zone in which the car is located, the coordinates of the location of the truck, according to navigation systems: the width, longitude and height above sea level of the truck, the speed of the truck in km/h, the current mileage of the truck in kilometers, the vertical load on the drive axle of the truck; frequency of rotation of the output shaft of the engine; total fuel consumption.

a) *b)*

Fig. 1. Exploited truck vehicles: **a)** semi-trailer truck КАМАЗ-54901; **b)** truck KAMAZ-5325

Statistical data processing was carried out in order to obtain short driving cycles of trucks, which are equivalent in terms of loads and driving modes to a full-fledged route traversed by trucks during months of trips. Equivalent driving cycles of trucks were synthesized using the most common methods of statistical data processing: the modal method using Markov chains and the "microtrip" method using k-means clustering [10-14].

The Monte Carlo method with the use of Markov chains in the simulation of a driving cycle is based on probabilistic transitions and includes: the formation of vehicle speed states satisfying the Markov property; the compilation of a matrix of transition probabilities from one state to another, compiled from real cycle data; modeling vehicle speed using the Monte Carlo method, which is based on the generation of a random variable, according to which further selection of a random state is carried out.

The method of "microtrips" using k-means clustering is based on obtaining a sample of short sections of records of real vehicle movement with certain parameters, such as average speed, average acceleration, average deceleration, average trip duration, average trip length, relative fractions of the trip length, stops, accelerations, decelerations, movements with constant and low speeds, the number of transitions from acceleration to deceleration, the root-mean-square acceleration and the subsequent formation of a representative cycle of motion from them.

Verification of the considered modeling methods and the possibility of using them for strength calculations in the design of transmissions is carried out in the article [15].

The object of research in this work is an electric cargo vehicle, shown in Figure 2, having a 4x2 wheel formula, with a gross weight of 20.5 tons, with an electromechanical transmission designed for an axle load of 11.5 tons, developed at Bauman Moscow State Technical University within the framework of the project "Creation of high-tech production of mechatronic transmissions of perspective trucks and buses KAMAZ with electric energy storage and hydrogen fuel cells", implemented under the Agreement on the provision of Subsidies dated April 7, 2022 No. 02-17560/2021.

Fig. 2. Truck vehicle KAMAZ «Chistogor»

2 Mathematical model of a truck with an electromechanical transmission

To analyze the movement of the vehicle, calculate the transmission parameters necessary to assess the durability of its elements and conduct further comparative analysis of the driving cycles of trucks, a simulation model has been developed in the MatLab/Simulink software package. The model makes it possible to carry out comprehensive studies of the movement of a wheeled vehicle, simulate the movement of vehicles by driving cycles, takes into account the features of the operation of electromechanical transmissions, the efficiency of the traction motor in various modes during overloads. A general view of the structural block diagram of a cargo electric vehicle is shown in Figure 3.

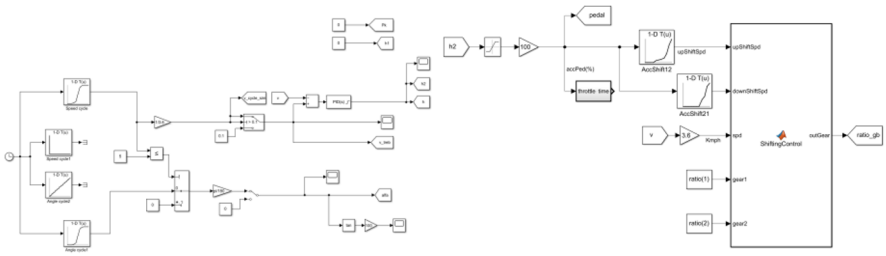

a) *b)*

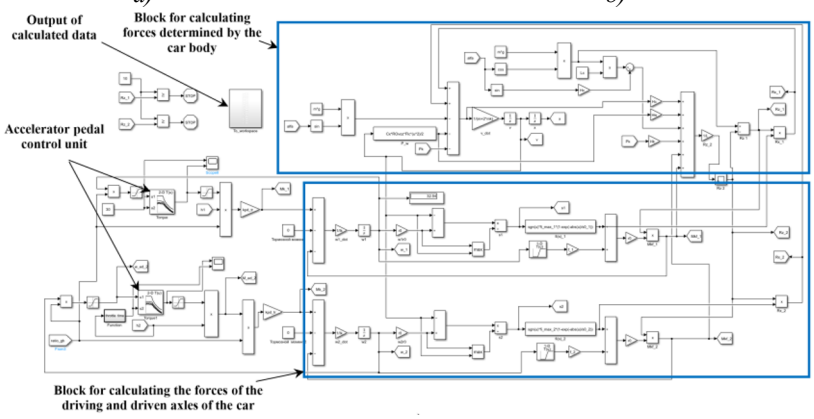

c)

Fig. 3. Structural block scheme of a truck vehicle: *a)* Block data entry unit of the driving cycle; *b)* Transmission control subsystem; *c)* Subsystem for calculating the system of equations of vehicle dynamics

When developing the model, the following assumptions were made:

- the model implies only the rectilinear movement of the vehicle;
- the model is a "bicycle" scheme of flat movement of a truck;
- damping and elastic suspension elements are not taken into account;

The simulation model is based on a mathematical model of the flat motion of a wheeled vehicle with a leading rear axle. The design scheme of the movement of the KAMAZ "Chistogor" electric truck is shown in Figure 4.

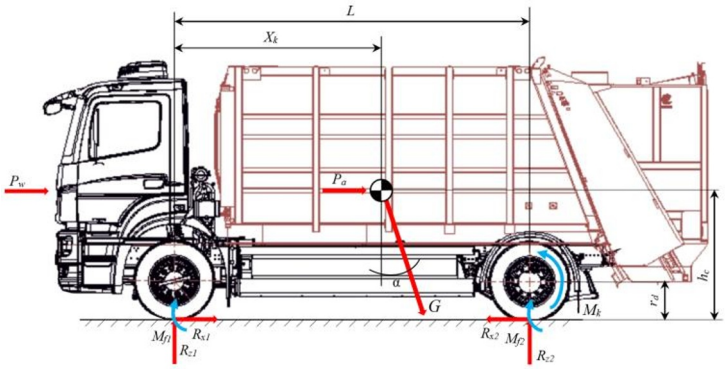

Fig. 4. Calculation scheme for the movement of a wheeled vehicle: P_w – force of air resistance; P_a – inertia force of a wheeled vehicle; R_{xi} – forces of interaction of wheels with the support base; R_{z1}, R_{z2} – normal reactions at the point of contact of the wheels with the support surface; M_{f1}, M_{f2} – Rolling resistance moment; M_k – Torque applied to the rear axle; α – elevation angle; r_d – distance from the wheel axle to the road surface; X_k – distance from the center of mass to the front axle of the truck; h_c - height of the center of mass of the truck; L – wheelbase of a truck vehicle

It is described by the following systems of equations (6) and (7):

$$\begin{cases} m \cdot \dot{V} = \sum_{i=1}^{2} R_{xi} - m \cdot g \cdot \sin\alpha - P_w \\ J_{ki} \cdot \dot{w}_i = M_k - M_k^f, \end{cases} \tag{6}$$

where m – weight of the truck vehicle; $\dot{V}$ - longitudinal acceleration of the center of mass of the truck; J_{ki} – the moment of inertia of the i-th wheel; $\dot{w}_i$ – angular acceleration of the i-th wheel; r_d – distance from the wheel axis to the road surface; M_{fi} – rolling resistance moment of the i-th wheel; g – acceleration of gravity; M_k^f – the moment of resistance to wheel rotation caused by hysteresis losses during rolling and interaction with the support surface.

$$\begin{cases} R_{z1} + R_{z2} = G \cdot \cos\alpha; \\ R_{z2} \cdot L = (P_a + P_w + G \cdot \sin\alpha) \cdot h_c - G \cdot X_k \cdot \cos\alpha + \sum_{i=1}^{2} M_{fi} \end{cases} \tag{7}$$

The slipping coefficient S_s is determined by the formula (8)

$$S_{si} = \frac{|w_i \cdot r_d - V|}{\max(w_i \cdot r_d, V)} \tag{8}$$

The sliding friction coefficient μ_s is calculated by the formula (9)

$$\mu_s = \mu_{s\alpha\max} \cdot \left(1 - e^{-\frac{S_{si}}{S_0}}\right) \cdot \left(1 - e^{-\frac{S_{si}}{S_1}}\right) \tag{9}$$

where S_0 and S_1 – constants defining the shape of the curve; $\mu_{s\alpha\max}$ – coefficient of friction of full sliding for a given angle of rotation.

The driving cycles of trucks synthesized using the modal method using Markov chains and the method of "microtrips" using k-means clustering, used to simulate the movement of a truck with an electromechanical transmission are shown in Figure 5. The standardized driving cycles of WLTP and HFWET vehicles are shown in Figure 6.

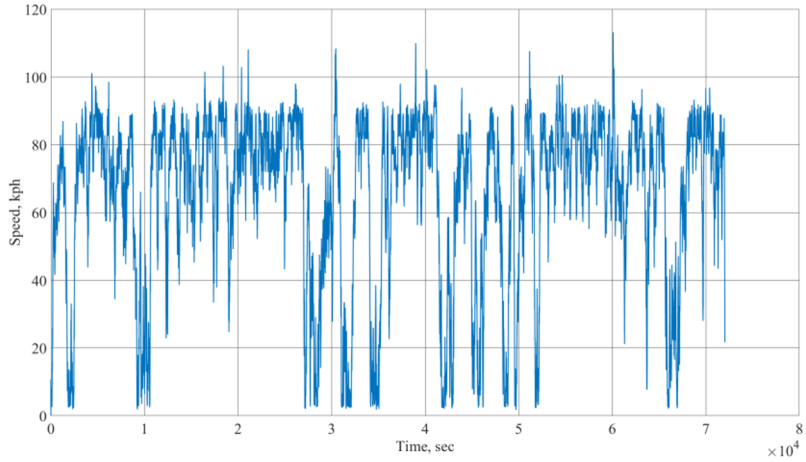

a)

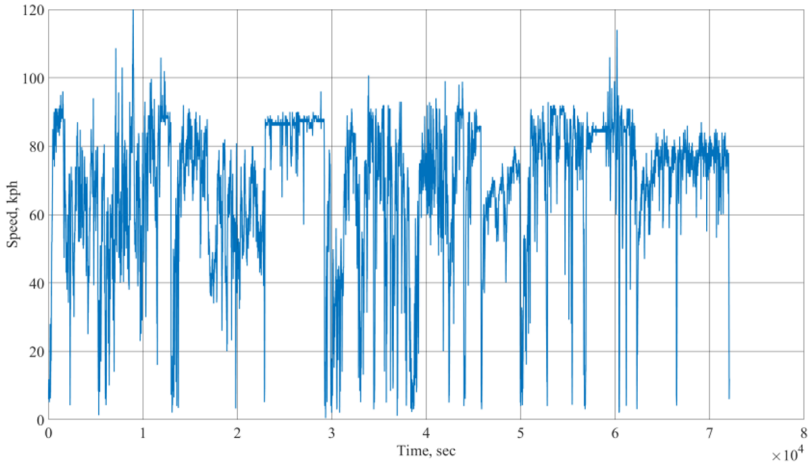

b)

Fig. 5. Driving cycles of a truck vehicles: *a)* Monte Carlo cycle using Markov chains; *b)* Cycle by the method of "microtrips" using k-means clustering

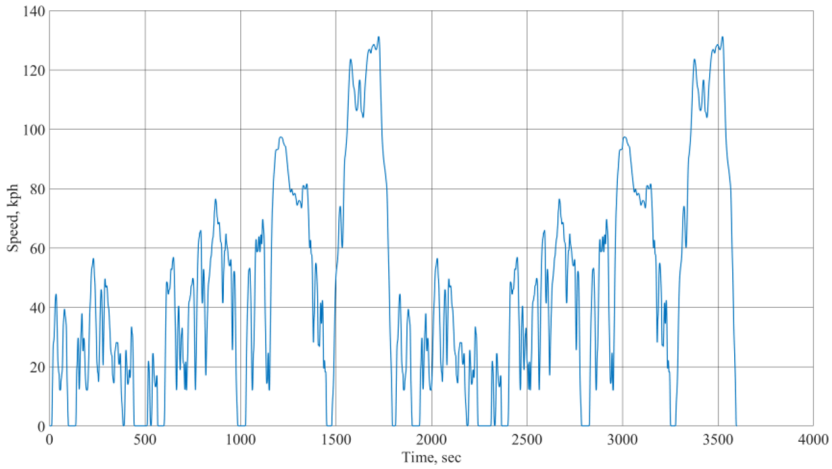

a)

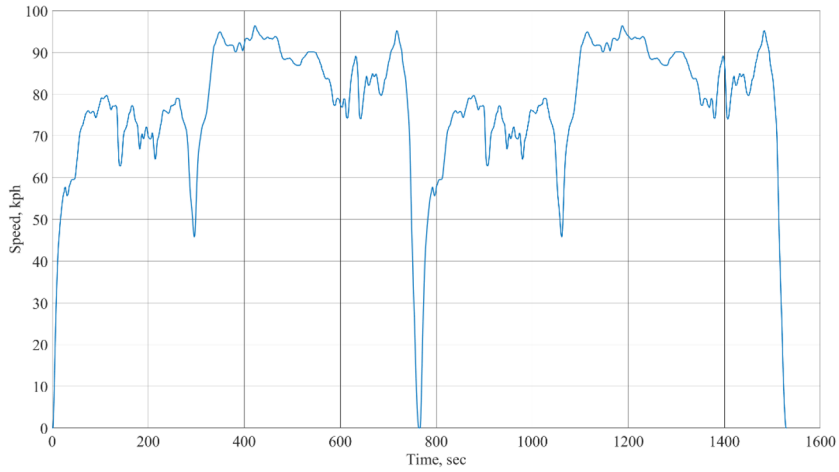

b)

Fig. 6. Driving cycles of a truck vehicles: *a)* WLTP cycle; *b)* HFWET cycle

The initial data of the car used in the simulation of motion in the developed simulation model are presented in Table 1.

Table 1. Initial data of the simulation model of the movement of a cargo electric vehicle

Name of the parameter	Meaning
Gross vehicle weight, kg	20500
Frontal area of the vehicle, m^2	7.34
Rolling radius, m	0.5
Vehicle track, m	2.05
Vehicle height, m	3.10
Vehicle base, m	4.40
Vehicle center of mass distance to the front axle, m	2.20

Center of gravity height, m	1.150
Gear ratios for high and low gears respectively	12.8 25.4
Road and ground conditions:	
- Rolling resistance coefficient	0.018
- Maximum adhesion coefficient	0.7
- Constants defining the shape of the curve S_0/ S_1	0.1/0.2

3 Evaluation of the durability of the electromechanical transmission

The assessment of the durability of the electromechanical transmission was carried out according to the main parameters of the operation of the traction motor, obtained during the simulation of the movement of a truck for the considered driving cycles of vehicles: the torque on the motor shaft, the angular speed of rotation of the motor shaft and the duration of the loads. The combination of these parameters makes it possible to draw up a cyclogram of the loads acting on the gearbox of an electromechanical transmission. The load cyclogram is a matrix of values of the relative mileage of the vehicle at different speed ranges of the traction motor shaft at different ranges of torque realized when driving in each section of the driving cycle of the truck. The cyclogram of loads used in the calculation model of the transmission makes it possible for most accurately determining of safety margins and service life of the gears and bearing units.

The result of the calculation of the method of relative mileages according to formulas (1) - (5) is a number of parameters obtained under maximum loading conditions. The calculation results are presented in table 2.

Table 2. Results of calculation of loads by the method of relative mileages

Frequency, s	Torque, N·m	Rotation speed, rpm
82105	1130	311
73462	898	392
949265	1130	617

The load cyclograms of the truck transmission obtained for each of the driving cycles of vehicles are shown in Figures 7 and 8.

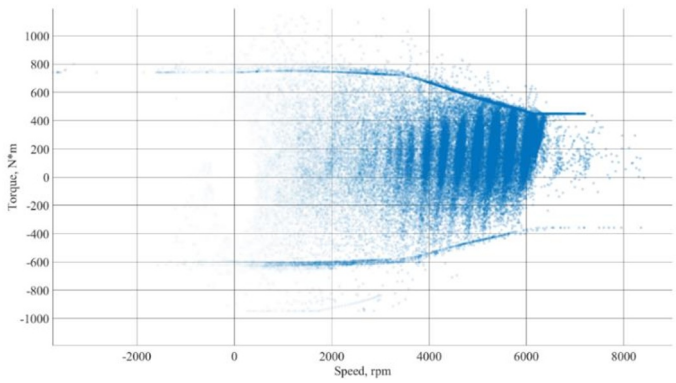

a)

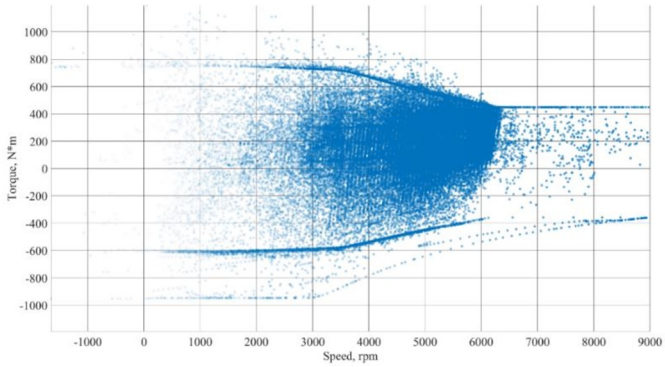

b)

Fig. 7. Cyclogram of loads on the electromechanical transmission of a truck vehicle*: a)* cycle based on the Markov method; *b)* cycle based on the method of "microtrips" with k-means clustering

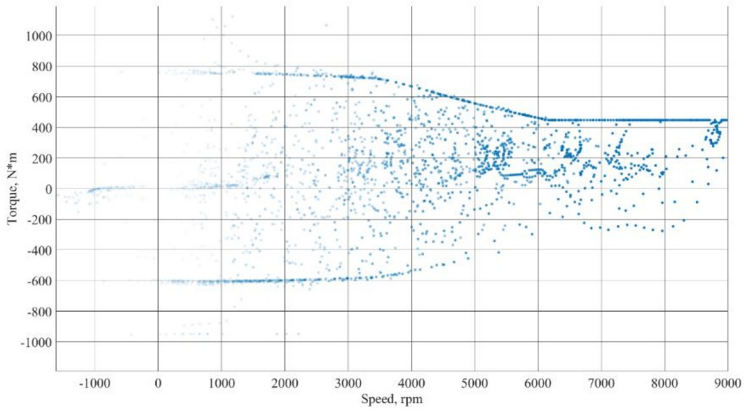

a)

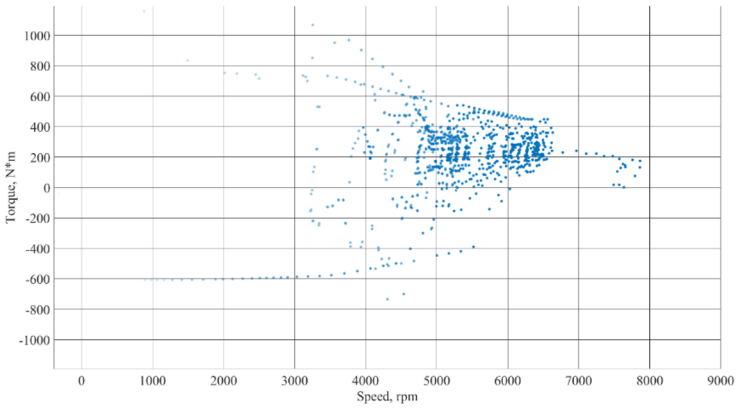

b)

Fig. 8. Cyclogram of loads on the electromechanical transmission of a truck vehicle: *a)* WLTP cycle; *b)* HFWET cycle

The analysis of the durability of the electromechanical transmission was carried out on the example of one of the most loaded planetary stages of the electromechanical transmission of the KAMAZ "Chistogor" electric truck – the third planetary gear set. The kinematic scheme of the truck transmission is shown in Figure 9.

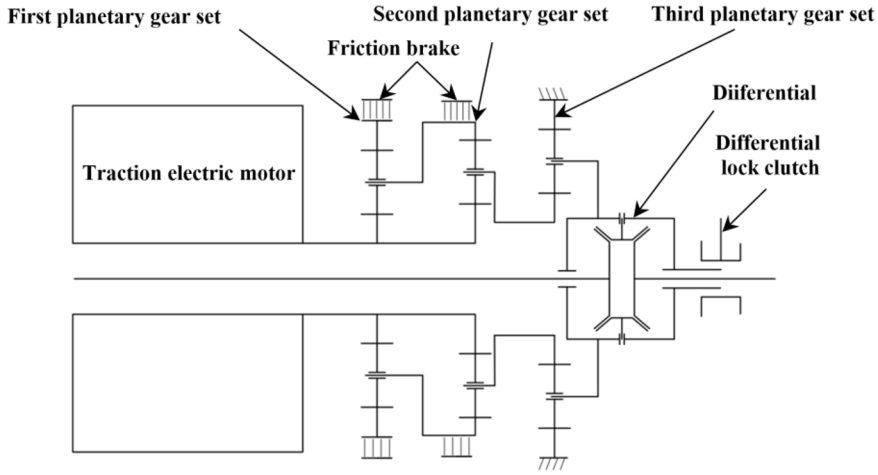

Fig. 9. Kinematic scheme of the electromechanical transmission of the KAMAZ "Chistogor" electric truck

Evaluation of the durability of gears includes the calculation of contact and bending endurance according to the required service life of the electromechanical transmission. The durability of the teeth in bending and in contact is determined by comparing the calculated stresses in the dangerous section with the allowable stresses:

$$\sigma_F \leq \sigma_{FP} \tag{10}$$

$$\sigma_H \leq \sigma_{HP} \tag{11}$$

where: σ_F – calculated bending stress; σ_{FP} – permissible bending stress; σ_H – rated stress in contact; σ_{HP} – permissible contact stress.

The calculated bending stress on the transition surface of the tooth is determined by the formulas:

$$\sigma_F = K_F \cdot Y_{FS} \cdot Y_\varepsilon \cdot Y_\beta \cdot \frac{F_{tF}}{bm} \tag{12}$$

where: K_F – load factor; Y_{FS} – coefficient that takes into account the shape of the tooth; Y_ε – coefficient that takes into account the overlap of the teeth; Y_β – coefficient that takes into account the slope of the teeth; b – the width of the crown of the gear wheel; m – normal module.

$$\Sigma_H = Z_H \cdot Z_E \cdot Z_\varepsilon \cdot \sqrt{\frac{K_H \cdot F_{tF}(u+1)}{bm}}, \tag{13}$$

where: K_H – load factor; Z_H – a coefficient that takes into account the shape of the tooth surfaces; Z_E – a coefficient that takes into account the mechanical properties of coupled gears; Z_ε – a coefficient that takes into account the total length of the contact lines; F_{tF} – circumferential force on the dividing diameter; u – gear ratio.

Modern software systems for calculating the strength and durability of gears, such as KISSsoft, are based on the above formulas (10) - (13), take into account modern world standards ISO, DIN, AGMA and allow you to calculate the resource of transmission elements with high accuracy.

When calculating the gears and bearing assemblies of the considered electromechanical transmission, the calculation model developed in the KISSsoft software package with the most accurate reproduction of the transmission geometry was used. A general view of the model and a design scheme indicating the constituent elements of the electromechanical transmission of the KAMAZ "Chistogor" truck in Figure 10 and 11, respectively.

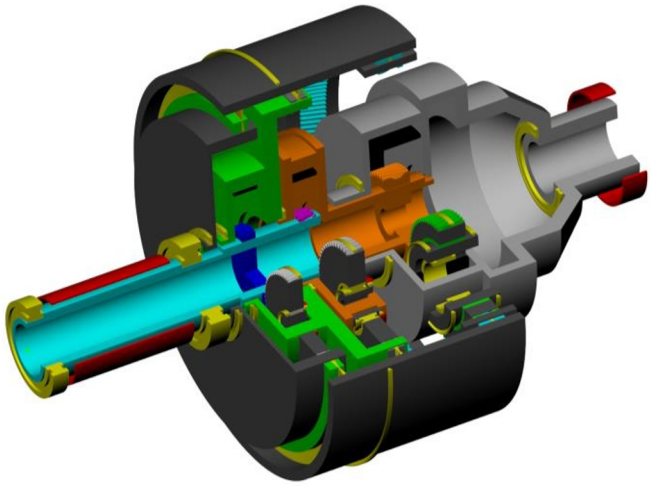

Fig. 10. Calculation model of the electromechanical transmission of the KAMAZ "Chistogor" electric truck

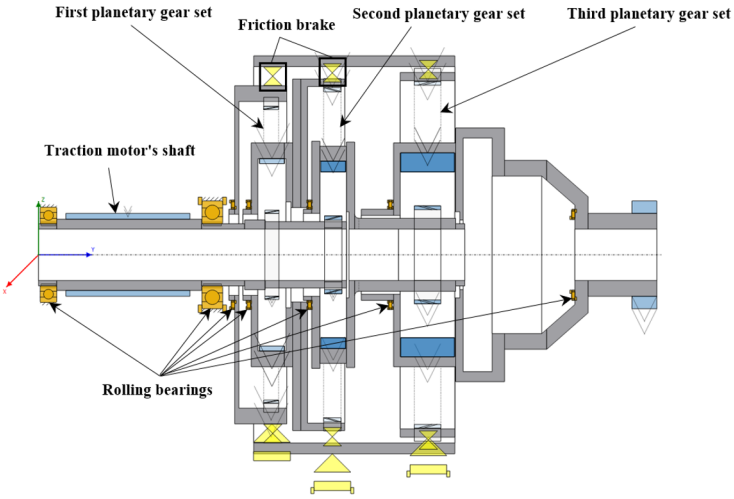

Fig. 11. Design scheme of the electromechanical transmission of the KAMAZ "Chistogor" electric truck

The results of the strength and durability calculation of the planetary gear set of the electromechanical transmission using the loading cyclograms obtained in the course of simulation of the movement for various driving cycles of vehicles are presented in Table 3.

Table 3. The results of the calculation for strength and durability

Gear name	Relative mileage method	Markov method	"Microtrip" method	WLTP	HFWET
Margin of bending strength					
Sun gear	0.769	1.048	1.172	0.956	0.993
Satellite	0.937	1.262	1.377	1.134	1.172
Epicycle	0.935	1.216	1.306	1.081	1.165
Margin of contact strength					
Sun gear	1.126	1.343	1.393	1.241	1.315
Satellite	1.265	1.452	1.456	1.397	1.448
Epicycle	2.392	2.801	2.844	2.612	2.784

According to the obtained data of calculations of safety margins for each driving cycle of trucks, it can be noted that the greatest safety margins are provided when using load cyclograms obtained in simulation modeling for driving cycles of trucks, synthesized on the basis of real traffic records using Markov methods and "microtrips".

Transmission safety margins when calculating for a load cyclogram obtained by the relative mileage method are the lowest in comparison with other considered load cyclograms obtained from vehicle driving cycles.

Safety margins in the calculation of load patterns obtained from WLTP and HFWET standardized vehicle driving cycles are close to safety margins obtained from truck driving cycles based on real traffic records.

4 Conclusion

Based on the results of a study of the using vehicle driving cycles in the calculation of electromechanical transmissions of trucks for durability, the following conclusions were formulated:

1) Assessing the durability of truck transmissions by the method of relative mileage (experimental and statistical method) is not an optimal solution today, since such a method assumes the distribution of speeds according to the normal law and does not consider the real modes of movement of trucks operating in a mixed driving cycle. As a result of the application of this method, transmission designs are large-sized and suboptimal in weight.
2) The application of the standardized WLTP vehicle driving cycle is not practical for trucks with electromechanical transmissions traveling both in urban areas and on highways, due to the presence of high-speed driving modes typical of passenger cars.
3) For preliminary calculations for strength and durability of electromechanical transmissions of trucks, it is possible to use the standardized HFWET cycle, due to the closeness of the safety margin values to the real ones obtained on the basis of real traffic records.

4) In order to obtain accurate values of the safety margins of the electromechanical transmission of a truck moving equally often in urban conditions and along highways in the territory of the geographical region under consideration, it is advisable to use driving cycles of vehicles synthesized on the basis of statistical data of the movement of trucks in this region, which will improve the metal consumption and develop an electromechanical transmission with the smallest dimensions.

References

1. I.A. Reshitoglu, K. Altinishik, A. Keskin, Policy in the field **17,** 15-27 (2015). https://doi.org/10.1007/s10098-014-0793-9
2. T. Donateo, M. Giovinazzi, Energy Procedia **126,** 891-898 (2017) https://doi.org/10.1016/j.egypro.2017.08.307
3. J. Wu, C.-H. Zhang, and N.-X. Cui, International Journal of Automotive Technology **13(7),** 1159–1167 (2012) https://doi.org/10.1007/s12239-012-0119-z
4. D. Jung, J. Bang, S. Choi, H. Choi, and K. Min, Journal of Mechanical Science and Technology **27(7),** 2171–2179 (2013) https://doi.org/10.1007/s12206-013-0536-6
5. A.G. Simpson, G.R. Walker, Transactions of the SAE - Journal of Engines SAE, Technical Paper **2003-01-2300** (2003) https://doi.org/10.4271/2003-01-2300
6. M. Baglione, M. Duty, G. Pannone, SAE Technical Paper **2007-01-0398** (2007) https://doi.org/10.4271/2007-01-0398
7. M.L. Baglione, Development of System Analysis Methodologies and Tools for Modeling and Optimizing Vehicle System Efficiency (University of Michigan, Ann Arbor, MI. accessible via. 2007) https://doi.org/10.1177/0361198120947415
8. N.A. Patankar, J. Lin, T.N. Patankar, Mileage efficiency of cars. (2021) https://doi.org/10.1016/j.clet.2021.100240
9. L. Czege, A. Vamosi, I. Kocsis, IJEMS **5(2)** (2020) https://doi.org/10.21791/IJEMS.2020.2.31
10. L. Xiaodong, J. Ma, X. Zhao, J. Du, Ya. Xiong, Journal of Advanced Transportation **21** (2020) https://doi.org/10.1155/2020/3871703
11. Zh. Wanga, J. Zhanga, P. Liua, Ch. Qua, X. Lia, ICAE2018 **6** (2018) https://doi.org/10.1016/j.egypro.2019.01.389
12. R.M. Desineedi, S. Mahesh, G. Ramadurai, *Developing driving cycles using k-means clustering and determining their optimal duration,* WCTR 2019 Mumbai 26-31 May 2019.
13. P. Nouri, C. Morency, Transportation Research Record: Journal of the Transportation Research Board **2627,** 86–92 (2017)
14. Jie Lin, Debbie A. Neimeier, Atmospheric Environment **36,** 5759–5770 (2002)
15. A. Muravev, V. Shishkina, M. Potashnikov, *Overview of methods for modeling driving cycles based on real-world traffic records* (to be published)