The formation of alloy based on Al-Ti-B system by electroslag process involving dispersed engineering waste

Nikolay Safronov[1], *Lenar* Kharisov[1*], and *Marat* Fazliyev[1]

[1] Naberezhnye Chelny Institute of Kazan (Volga Region) Federal University, 423800 Naberezhnye Chelny, Russia

Abstract. In this article presents technological process of manufacturing Al-Ti-B rod master alloy by electroslag casting is proposed and investigated. Aluminum alloy chip waste of a grade AK7, commercial titanium of a grade VT1-00 and amorphous boron of a grade A were used as starting materials. The consumable electrode is a product in the form of a rod obtained by mouthpiece pressing of a mixture of crushed starting materials in a mass ratio of AK7 : VT1-00 : amorphous boron = 97:2:1. According to the proposed technology and the ratio of starting materials in the charge composition, an experimental bar material of the Al-Ti-B ligature was obtained, electron microscopic, micro-X-ray spectral studies, the stereometric analysis of the structure which showed the priority interaction of titanium with boron.

1 Introduction

Qualitative characteristics and service properties of aluminum alloys are largely determined by their structure both at the macro and micro levels. Among the many technological measures that affect the structure of aluminum alloys, modification occupies a special place, i.e. grinding of the main structural components due to various influences on the melt, which has a positive effect on the properties of cast products. This concept is based on the concept of microheterogeneous structure of liquid aluminum alloys. Numerous studies show that the processes of nucleation of the solid phase in metallic melts are due to the existence of various chemical and structural inhomogeneities [1]. Traditional modifiers for silumins are various fluxes based on sodium and potassium salts [2]. However, they are not without significant drawbacks, both from a technological and environmental point of view. At present, the problem of guaranteed refinement of the structure of cast alloys is acute in the blank production of mechanical engineering of aluminum structures. The Al-Ti-B ligature effectively copes with the solution of this problem. This master alloy has a high modifying ability, the processing of which melt contributes to the formation of a thin equiaxed structure of aluminum and its alloys, which significantly improves their mechanical and casting properties [3].The main and traditional method for obtaining the Al-Ti-B ligature is the melting-casting technology, various variants of which are described in [5]. A resistance

* Corresponding author: ln271@mail.ru

furnace is usually used as a melting unit, in which an aluminum melt is prepared at a temperature of ≈800°C. After removing the slag from the metal surface, portionwise introduction of a mixture of titanium with a boron-containing component into the aluminum melt is carried out, the melt is mixed and poured. Another version of the given technology [4] is as follows. Potassium tetrafluoroborate KBF_4 is first introduced into the aluminum melt under its level in several steps using a titanium bell. The melt is kept with periodic stirring for half an hour, heated to a temperature of 900° and load titanium sponge impregnated with carnallite flux. Next, the slag is removed from the metal surface and the resulting ligature is poured into steel molds.

The analysis of the features of the melting and foundry technology for producing Al-Ti-B ligature allows us to conclude that it is multi-stage, time- and energy-intensive, requires careful organization of processes for preparing charge materials, preparing melts in a melting unit, pouring and crystallizing the finished product involving sophisticated expensive equipment. These circumstances have a negative impact on the effectiveness of the technology under discussion and, ultimately, on the cost of the product.

The alternative technology for producing Al-Ti-B ligature, devoid of many disadvantages of melting-casting, can be one based on the process of electroslag casting with the production of compact ingots. The technological advantage of the electroslag process in the application of the formation of a cast billet lies in the fact that the synthesis of the billet material, bringing it to a liquid state of aggregation, filling the mold with it and solidifying the synthesized material occurs continuously and simultaneously, which eliminates a lot of technological conversions inherent in traditional methods for producing a cast billet, due to the fact that in conventional melting and casting technology, these operations are separated. In addition, electroslag metal is of high quality, due to the isolation of the metal melt by a layer of liquid slag and its refining effect on the emerging metal in the form of droplets with a highly developed surface. This circumstance guarantees the absence of such negative phenomena that worsen the quality of the casting metal as contamination with gases, ladle refractories and molding sand, and during the crystallization of large masses of metal, the development of segregation, the formation of shrinkage and gas shells.

In this study the electroslag casting of the Al-Ti-B ligature is supplemented with the SHS process, which brings a number of advantages to the developed technology: saving energy costs, creating the possibility of efficient recycling of dispersed industrial waste [6]. This process is based on the reaction (1) of the formation of titanium diboride from elements with an energy effect of -323.63 kJ/mol at 298 K [7] and Al_3Ti from elements (4) with an energy effect of -144 kJ/mol.

$$Ti + 2B = TiB_2 \tag{1}$$

$$Ti + 3Al = Al_3Ti \tag{2}$$

which are initiated in the mode of gasless chemical combustion in the presence of the third component - the "solvent", in the melt of which the formation of the discussed product is possible. The purpose of the study is to develop a technological process for obtaining an Al-Ti-B ligature based on a combination of electroslag casting with SHS using dispersed waste from mechanical engineering and obtaining a high-quality product.

2 Experimental equipment and technological process of Al-Ti-B ligature synthesis

The scheme of the installation, on which the Al-Ti-B ligature was obtained in this study, is shown in Figure 1. This installation is based on the method of electroslag casting with metal overflow. This method involves the separation of the processes of melting the electrodes (7)

and crystallization of the liquid metal (2), which are carried out separately in the melting furnace (4) and the mold (5). Liquid metal (3) from the melting furnace (4) enters the mold (5) by overflow. The metal in the melting furnace (4) and mold (5) is constantly under a layer of liquid slag (2). During the process of forming the Al-Ti-B ligature in the form of a rod (6) with a square section (the side of the square is 10 mm), the mold (5) moves down relative to the stationary melting furnace (4) as it is filled. The main material from which the experimental setup is made (mouthpiece (1), melting furnace (4), casting mold (5)) is graphite. The material of liquid slag (2) was a mixture of salts KCl, $MgCl_2$, LiF, MgF_2 bin the following mass ratio between themselves: 30 : 30 : 30 : 10.

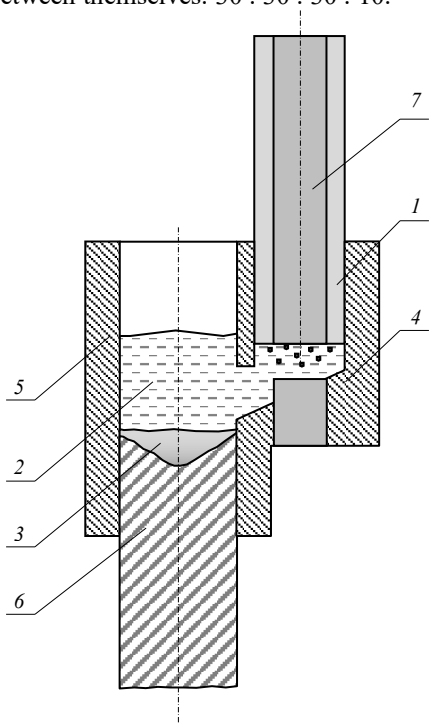

Fig. 1. The installation scheme: 1 - mouthpiece; 2 - liquid slag; 3 - liquid metal; 4 - melting furnace; 5 - casting mold; 6 - casting; 7 - consumable electrode

The starting materials for obtaining the Al-Ti-B master alloy were waste aluminum alloy chips of a similar grade, subjected to modification with the specified master alloy, namely: AK7, technical titanium grade VT1-00 and amorphous boron of a grade A. The chemical composition of the above materials is given in table 1.

Table 1. The chemical composition (% wt.) of raw materials for obtaining Al-Ti-B ligature

Aluminum casting alloy brand AK7							
Al	Si	Fe	Cu	Mn	Mg	Zn	Ni
88.9	7.7	0.9	1.4	0.4	0.3	0.2	0.2

Technical titanium grade VT1-00						
Ti	Fe	C	Si	N	O	H
99.69	0.10	0.03	0.07	0.03	0.08	0.004

Amorphous boron of a grade A				
B	Mg	Si	Fe	Humidity
93.5	3.6	0.1	0.6	0.2

The charge materials shown in Table 1 are dried at a temperature of 250°C, crushed, mixed and compacted. To disperse chip waste, a ball mill was used, operating at a speed of rotation corresponding to 0.75-0.80 of the critical one, when the balls inside the mill, making circular motions, rotate together with its drum. The obtained powders of aluminum alloy AK7 and technical titanium grade VT1-00 were sifted on a sieve system 0045-05 (GOST 3584-73) in order to obtain a fraction size of <50 μm..

Next, a mixture of powdered components was prepared (table 1), which was formed in a ball mill, operating in a high-speed rotation mode, corresponding to 0.5-0.6 of the critical one. To implement the specified technological operation, it is necessary to determine the mass ratio of the charge components. It is known [8] that the following nucleating particles are formed in the Al-Ti-B ligature: TiB_2, Al_3Ti, AlB_2, $(AlTi)B_2$, among which particles of the first and last types have the greatest ability to refine the grain of the modified aluminum alloy. A characteristic feature of these particles is that the atomic ratio of Ti and B is the same 1:2. Obviously, it is this ratio in the ligature that is the key to the highest content of effective nucleating particles in it. In this regard, despite the compositions of master alloys recommended by GOST 53777-2010, the mass ratio of mixed powdered components (table 1) was adopted by us on the basis of previous considerations as follows: alloy AK7: technical titanium of the grade VT1-00: amorphous boron of the grade A = 97:2 :1

Since, upon completion of mixing the powder charge components, the mixture is expected to be compacted, to facilitate the mixing process and subsequent pressing of the mixture, a technological additive is introduced into the substance noted above - a glycerin-based plasticizer in the amount of 3.5 wt. % in relation to the powder substance. The plasticized charge mixture obtained in this way is thoroughly dried and sent to die pressing, as a result of which an equal-density product is obtained in the form of a rod with a diameter of 10 mm and a length of 500 mm. The process is carried out at a material compression ratio of 93%. This product is a consumable electrode (7), which is fed into the slag bath (2) of the melting furnace (4) through the mouthpiece (1). The charge composition of the consumable electrode (7) by means of the qualitative and quantitative ratio of the components determines the synthesis of the Al-Ti-B ligature of the required composition.

3 The obtaining of Al-Ti-B ligature prototype and analysis of its microstructure

This paper presents the results of testing the experimental setup (Figure 1) to obtain an Al-Ti-B ligature in the form of a rod 50 cm long. The starting materials, the technology for their preliminary preparation, the ratio of components in the powder mixture correspond to the above described. The obtained consumable electrode was subjected to an electroslag process with the following electrical parameters: the current flowing in the slag bath, 410 A, the voltage drop in the slag bath, 31 V. The depth of the slag bath was maintained at 45 mm, and the translational speed of the electrode was 35 m/h. The DC power supply of the experimental setup was carried out by a PSG-500 welding converter with a GSG-500 generator, which has a rigid characteristic.

The resulting Al-Ti-B rod ligature was subjected to a metallographic study using the electroslag casting technology using the dispersed waste of mechanical engineering in an experimental facility. Known compositions of Al-Ti-B master alloys [4] are characterized by the presence in the structure of nucleating inclusions Al_3Ti, AlB_2, having a size of 10÷50 μm or more (in some cases up to 100 μm), as well as smaller ones (TiB_2, $(AlTi)B_2$) with a particle size of 1÷3 μm. With regard to the refinement of the structure of aluminum and its alloys during modification with the alloy under discussion, the maximum effect of this technological operation is provided by the smallest crystals (TiB_2, $(AlTi)B_2$). The priority of the latter crystals as modifiers is due not only to their small size, which is the key to the

creation of a large number of crystallization centers of the modified aluminum melt, but also to the fact that they practically do not dissolve in it. On the contrary, titanium aluminide Al_3Ti dissolves in a liquid aluminum melt with the rate and completeness of dissolution determined by the temperature of the modified melt, the size of the Al_3Ti crystals, and the time from the moment the ligature is introduced into the melt to the crystallization of the metal. Based on the above reasoning, it follows that the modifying ability of the Al-Ti-B ligature is the higher, the greater the content of small TiB_2 and $(AlTi)B_2$ crystals in it and, accordingly, the less Al_3Ti и AlB_2.

In order to identify the intermetallic particles present in the Al-Ti-B experimental bar ligature, electron microscopic and micro-X-ray spectral studies were carried out. Figure 2 shows a typical electronic image of the ligature structure, which indicates the presence of a large number of small intermetallic particles evenly distributed throughout the ligature volume. In the same figure, a number of particles are indicated, the decoding of the spectra of which according to the ratio of elements is presented in Table 2.

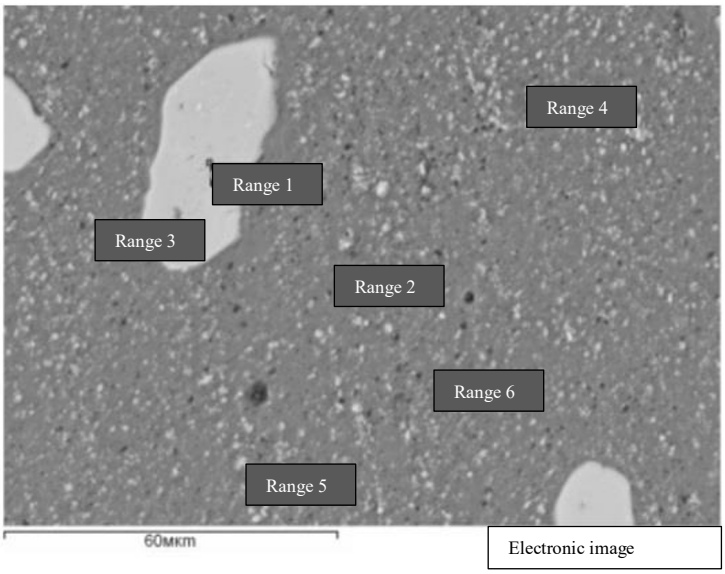

Fig. 2. The electronic image of the experimental ligature Al-Ti-B structure

Table 2. The results of electron microscopic and X-ray microscopic analysis of experimental ligature Al-Ti-B

Range	Content of elements, % at			
	B	Al	Si	Ti
1		75.14	0.63	24.23
2	65.97	15.42	0.37	18.24
3	66.41	5.86	0.24	27.49
4		72.76	1.55	25.69
5		74.50	0.70	24.80
6	67.51	4.83	0.68	26.98

Electron-microscopic and X-ray microscopic analyses of the particles of experimental ligature Al-Ti-B made it possible to identify them for their correspondence to intermetallic compounds. The spectra of particles 1. 4. 5 have an atomic composition in which the ratio of elements corresponds to the Al_3Ti phase. The rest of the spectra allow us to conclude that

there is a bond between titanium and boron. which corresponds to the intermetallic compounds TiB_2 and $(AlTi)B_2$.

The titanium present in the ligature forms intermetallic compounds with aluminum and boron. It has been indicated above that the latter bond is preferred due to the greater dispersity of the nucleating particles. Therefore, the quality of the modifying ligature is largely determined by the ratio of titanium atoms associated with boron and aluminum. In the present study, to assess the quality of the Al-Ti-B experimental ligature material, a stereometric analysis of its structure was carried out. Figures 3 and 4 show particle size distribution histograms in which titanium is bonded to aluminum and boron, respectively.

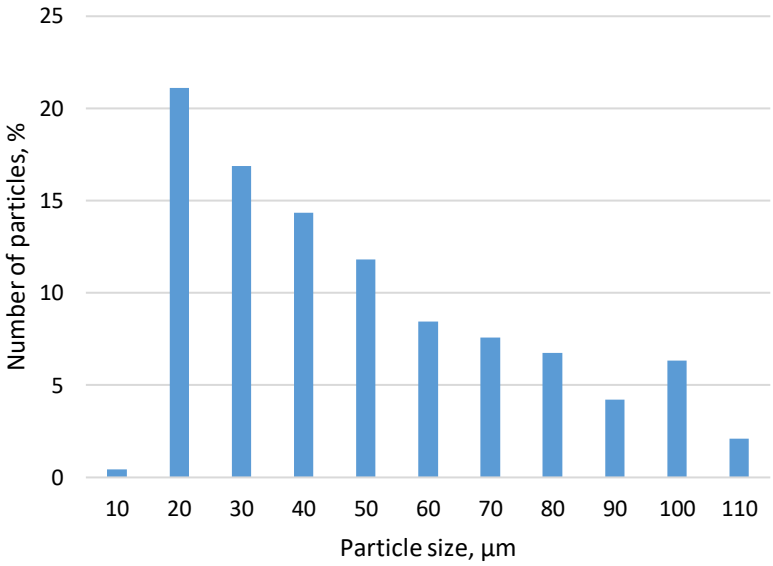

Fig. 3. The histogram of particle size distribution in which titanium is bonded to aluminum

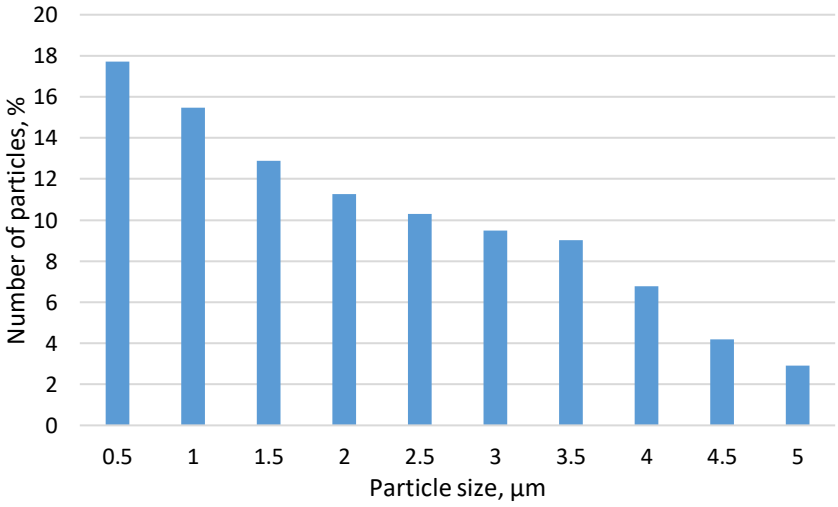

Fig. 4. The histogram of the distribution of particles by their size, in which titanium is associated with boron

The processing of the data of the stereometric analysis of the structure showed that the weighted average size of the particles in which titanium is bonded to aluminum is 44.2 μm. Particles in which titanium is bound to boron are an order of magnitude smaller, with a weighted average of 1.9 μm. Thus, the proposed electroslag technology for casting Al-Ti-B rod master alloy from a charge based on the use of dispersed machine-building wastes with the above ratio of its components creates the prerequisites for the priority interaction of titanium with boron and, as a result, the production of a large number of small nucleating particles in the structure. The stereometric analysis of the structure of the Al-Ti-B experimental alloying material made it possible to estimate the molar ratio of titanium associated with aluminum and boron. It turned out to be equal to 17.3:82.7.

4 Conclusion

The technological process of manufacturing Al-Ti-B rod master alloy by electroslag casting is proposed and investigated. Aluminum alloy chip waste of a grade AK7, commercial titanium of a grade VT1-00 and amorphous boron of a grade A were used as starting materials. The consumable electrode is a product in the form of a rod obtained by mouthpiece pressing of a mixture of crushed starting materials in a mass ratio of AK7 : VT1-00 : amorphous boron = 97:2:1. According to the proposed technology and the ratio of starting materials in the charge composition, an experimental bar material of the Al-Ti-B ligature was obtained, electron microscopic, micro-X-ray spectral studies, the stereometric analysis of the structure which showed the priority interaction of titanium with boron. This circumstance determined the high quality of the modifying ligature, expressed in the presence of a predominant amount of small nucleating particles of titanium diboride, the weighted average size of which was 1.9 μm

References

1. V.M. Alexandrov, Material science and technology of structural materials. Tutorial. Part 1. Materials science. Third generation standard (Arkhangelsk, Northern (Arctic) Federal University, 2015)
2. K.V. Nikitin, Modification and complex processing of silumins: tutorial (Samara, Samar. state tech. university, 2016)
3. D.V. Bakulin, Eurasian Scientific Journal **5** (2020)
4. B.P. Kulikov, P.V. Polyakov, V.F. Frolov, A.I. Armless, Ligature aluminum-titanium-boron: patent for invention RU 2 644 221 C1, IPC C22C 21/00 (2006.01), C22C 1/03 (2006.01), applicant and patent holder: Limited Liability Company "Wasteless and low-waste technologies" (LLC "BMT") (RU), No. 2016152034; dec. 12/27/2016; publ. 02/08/2018, bul. No. 4.
5. D.A. Popov, D.V. Ogorodov, A.V. Trapeznikov, Proceedings of VIAM **10,** 41-47 (2015)
6. I.R. Manashev, T.O. Gavrilova, I.M. Shatokhin, M.Kh. Ziatdinov, L.I. Leontiev, News of Higher Educational Institutions. Ferrous metallurgy **63(8),** 591-599. (2020) https://doi.org/10.17073/0368-0797-2020-8-591-599
7. Yu.L. Krutsky, N.Yu. Cherkasova, T.S. Gudyma, O.V. Netskina, T.M. Krutskaya, News of the Higher Institutions. Ferrous metallurgy **64(2),** 149-164 (2021) https://doi.org/10.17073/0368-0797-2021-2-149-164
8. V.I. Shpakov, V.S. Sevryukov, L.V. Galiyeva, A.I. Noshchik, L.P. Trifonenkov, N.V. Ivanova, V.S. Razumkin, V.M. Nikitin, A method for producing aluminum-titanium-

boron rod ligature: patent for invention RU 2 110 597 C1, IPC C22C1 / 03 /; applicant: Joint Stock Company "Krasnoyarsk Metallurgical Plant", No. 96112349/02, Appl. 06/17/1996; publ. 06/20/1998