Geosynthetic liner: a modern solution for a concrete dam constructed from particularly lean roller-compacted concrete

Nikolai Aniskin[1], *Alexey* Shaytanov[2*], *Mikhail* Shaytanov[2]

[1] Moscow State University of Civil Engineering, Yaroslavskoye Shosse 26, Moscow, Russia
[2] Joint Stock Company "Design and Survey Institute "Lengiprorechtrans", Russia

Abstract. This paper discusses the issue of seepage control in gravity dams made of compacted lean concrete. Several possible design options are outlined. The benefits of using geocomposite impervious blankets are explained. A description of different types of geocomposites is given, including their composition and component parameters. Basic properties of geosynthetics are discussed, along with methods for defining them, such as water permeability, tensile strength, puncture resistance, and ageing. Finally, the main areas for future research are formulated, although it may be helpful to provide more detail on the specific focus of this research.

1 Introduction

Currently, the use of low-cement concrete dams is increasing in projects worldwide due to their reduced construction time and lower cost compared to traditional HPPs, with reductions ranging from 20% to 50% depending on the area of construction [1 – 10]. Based on design, gravity dams of this type can be classified into four types:

1. Dams with a low-cement concrete central section and a vibrated concrete shell (see Fig. 1, a);
2. Dams constructed entirely with low-cement concrete (see Figure 1, b). However, it is mandatory to select appropriate concrete grades and classes, and zoning may be necessary to allow for higher cement content concrete in outer areas;
3. Low-cement concrete dams with an impervious blanket on the upstream face (see Fig. 2);
4. Trapezoidal dams of particularly lean, low-cement concrete, partially permeable, with impermeable liner on the upstream face (Fig. 3).

Options 3 and 4 are the most modern and technologically advanced, as well as economically feasible.

* Corresponding author: shaytanov.alexey@mail.ru

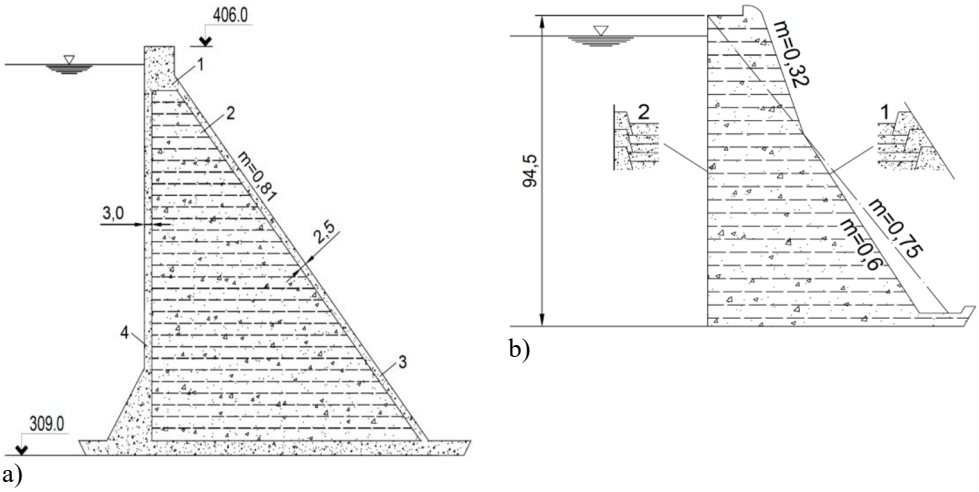

Fig. 1. a) Cross-section of the blind section of Tamagawa Dam Type 1, Japan: 1. Vibrated concrete (crest area); 2. Small-cement concrete inner area; 3. Vibrated concrete (downstream face); 4. Vibrated concrete (upstream face);
b) Cross-section of spillway section of Upper Stillwater Dam Type 2, USA; 1 - downstream face liner construction, 2 - upstream face

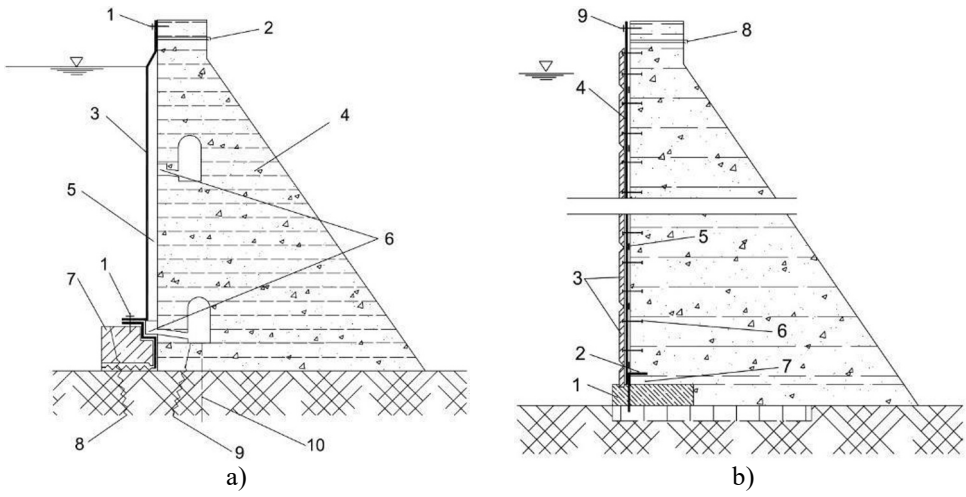

Fig. 2. a) shows a schematic of an exposed geocomposite system designed by Carpi Tech for low-cement concrete dams. The system consists of the following components: 1. perimeter bracing; 2. ventilation pipe; 3. geocomposite liner; 4. layers of low-cement concrete; 5. drainage layer; 6. collectors for drainage water; 7. concrete slab; 8. cementation of slab-base contact; 9. cement curtain; 10. subgrade drainage. b) Fig. 2 b) shows a schematic of a closed geocomposite system designed by Carpi Tech SA for low-cement concrete dams. The system components are as follows: 1. initial panel; 2. geocomposite liner; 3. prefabricated concrete panels; 4. geocomposite liner; 5. geomembrane strip; 6. anchors; 7. layers of low-cement concrete; 8. ventilation pipe; 9. perimeter bracing

It is well-known that low-cement concrete is not a homogeneous material, and it is essential to pay attention to its variable properties, particularly its water permeability, which can be influenced by the compaction process. As a result of its unevenness, zones of reduced density can occur in the body of the dam.

While inter-layer joints in high cement content compacted concrete dams are less permeable, the risk of uncontrolled seepage through temperature cracks due to increased exotherm of the cement increases. Therefore, constructing such dams requires strict control over the temperature of the low-cement mix during fabrication and laying, which may necessitate cooling the mix, as well as waterproofing of horizontal joints. All these measures are necessary to prevent leaching of cement and subsequent deterioration of the concrete.

The accident that occurred in 2004 at the Camara dam in Brazil, two years after its completion, confirms the danger of seepage, which can lead to the loss of stability of the structure [4,5]. Therefore, there is a clear need to address this problem, such as installing an impervious element on the pressure face.

Depending on the type, the impervious face liners can be divided into two groups: concrete and synthetic. Concrete face liners can be made of reinforced or unreinforced vibrated concrete, compacted concrete with a high cement content, prefabricated concrete, etc. To effectively resist seepage, concrete and reinforced concrete baffles must be thick enough, and all joints must be sealed. However, this type of cladding is prone to temperature cracking, has low earthquake resistance, does not create a homogeneous protective coating of the pressure face, and requires regular repairs. Furthermore, installing concrete impervious blankets of this type increases the construction period of the structure and its operation cost, which contradicts the main idea of constructing low-cement concrete dams.

Synthetic geocomposite systems, such as Sibelon produced by Carpi Tech, Switzerland, or RUBBERFLEX CNTE/CNTP produced by TempStroySystem Corporation, Russia, can be installed both after the dam's completion and during its construction to provide waterproofing of already completed dam sections [11 – 16]. The main advantage of such systems is that they can solve the problem of waterproofing interlayer joints and the head face, leading to a reduction in requirements for the concrete mix and saving on cement. The installation can be carried out quickly by individual teams without interfering with the laying of low-cement concrete layers.

The geocomposite is composed of a geomembrane (1.5 mm to 5 mm thick) and a geotextile (with a surface density from 200 g/m^2 to 800 g/m^2) that are thermally welded together during production. The material is highly waterproof ($k_f \leq 6.25x10^{-12}$ m/s), seamless, and possesses high tensile strength (with a maximum elongation at break of the geomembrane ≥ 250%) that allows it to bridge formed cracks [11 – 17]. The geocomposite is resistant to chemical, biological, and atmospheric influences, and it does not lose its properties under the influence of ultraviolet light.

The sheets can be welded together in the temperature range from -30°C to +60°C. If repairs are needed, the geocomposite can be installed underwater and mechanically fixed to the surface of the pressure face without the need for complete reservoir drawdown.

Figure 2 shows schemes of exposed and closed geocomposite systems. The service life of the exposed system is more than 50 years, while that of the closed system is unlimited (according to the manufacturer).

Closed systems provide permanent protection of the geocomposite from possible damage during operation. However, such systems require very strict quality control of workmanship. Once the system has been installed, it is virtually impossible to monitor and repair it [11, 16 – 17].

On the other hand, exposed systems allow for monitoring at any time, including underwater inspections. The risk of damaging the liner during installation is minimal. Repairs can be carried out underwater without lowering the water level in the reservoir.

Exposed systems require a drainage layer consisting of a high-capacity geogrid to collect and divert seepage water that may occur as a result of any unforeseen damage to the

liner. The drainage layer also protects the liner from the negative effects of back-pressure generated behind it in the event of rapid reservoir drawdown.

The water collected by the drainage system is diverted into the galleries of the dam by means of composite pipes installed perpendicular to the discharge face, and its quantity characterizes the performance of the geocomposite liner. This allows leaks to be detected quickly, and the necessary repairs can be made promptly.

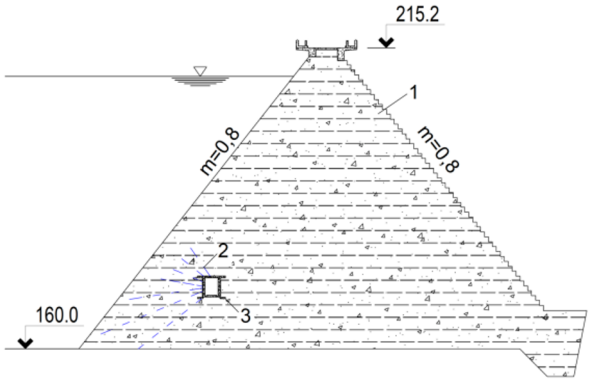

Fig. 3. Low-cement extra lean concrete dam with symmetrical profile Filiatrinos, Greece, 2015: 1. layer of low cement concrete; 2. drainage wells; 3. drainage gallery

The effectiveness of this technology is evidenced by the increasing number of low-cement concrete dams that feature a geocomposite impervious element on the discharge face. As of 2019, 16 large dams have an exposed system, and 9 have a closed system.

The fourth type of dams (see Fig. 3) are symmetric profile structures that require very little aggregate and have a cement content of 50 to 80 kg/m^3 (extra lean low-cement concrete). This amount of cement is sufficient to ensure the stability of the structure. The low-cement mix is laid in thicker layers without transverse joints.

The concept of using extremely lean, low-cement concrete with a symmetrical profile was first developed in 1970. The idea was to construct a structure that combines some of the characteristics of a concrete gravity dam and an earthfill dam [17 – 20].

2 Methods

In the design presented in this paper, the concrete mass ensures the stability of the structure, while the Sibelon geocomposite liner provides its water tightness, which reduces the requirements for dam body material and interlayer joints. The geocomposite liner, developed by Carpi Tech SA of Switzerland, is composed of a homogenous polyvinyl chloride geomembrane that is 1.5 mm to 5.0 mm or thicker, and it is heat-welded with a needle-punched non-woven geotextile with a density ranging from 200 g/m^2 to 800 g/m^2.

The geomembrane is made of plasticized polyvinylchloride, containing additives such as light absorbers, plasticizers, antioxidants, and others. The geotextile layer, on the other hand, enhances the geocomposite system's resistance to punctures, ruptures, subsidence, and negative pressure effects.

The year 2009 marked the 50th anniversary of the first installation of a geomembrane on a dam (Contrada Sabetta, Italy, 1959, closed system), and as of 2010, synthetic impervious elements have been installed on 263 dams worldwide. Table 1 illustrates the number of structures with each type of geomembrane, and it clearly shows that PVC geomembranes are the most commonly used type, accounting for 59.32% of the total projects implemented.

Table 1. Types of geomembranes to be installed on dams and other

Type	Main material	Total amount of exposed systems	Total amount of covered systems	Longest operation of exposed systems	Longest operation of covered systems
Polymer	Plasticised polyvinylchloride	80	73	1974	1960
Polymer	Polyolefin	0	29	-	1970
Polymer	Polyolefin	3	12	1994	1978
Polymer	Elastomer	5	4	1982	1959
Polymer	Chlorosulphonated polyethylene	3	5	1981	1986
Polymer	Polyolefin	3	3	1995	2000
Polymer	Chlorinated polyethylene	0	3	-	1970
Bitumen	Oxidized bitumen	7	10	1973	1978
Bitumen	Polymeric bitumen	0	3	-	1996

Then some fundamental properties of impervious geomembrane blankets were explored.

3 Results

Fig. 4. Comparative results of seepage flow rates of low-cement concrete dams: 1 - Willow Creek; 2 - Middle Fork; 3 - Little Goose; 4 - Galesville; 5 - Copperfield; 6 - Concepcion, Penn Forest and other geocomposite lined dams.

Water impermeability is the most important parameter for all types of impervious liners. The geocomposite liner under consideration has a filtration coefficient of 10^{-12} m/s or 8.6 x 10^{-8} m/day. However, this coefficient actually refers to the material's vapor permeability coefficient, which is substantially lower than that of concrete and reinforced concrete linings. Fig. 4 presents a comparison of the filtration flow rates of low-cement concrete dams.

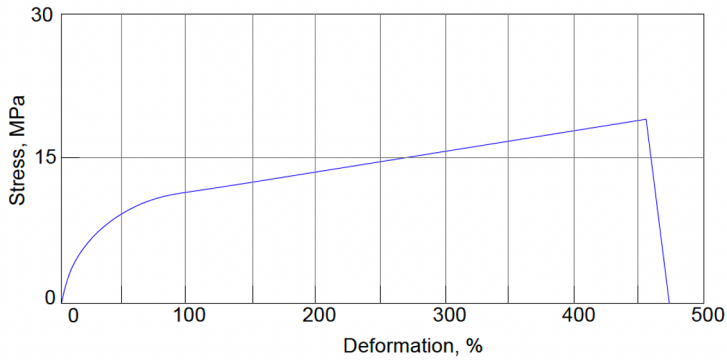

Fig. 5. Stress-strain relation for PVC geomembranes

Perception of tensile stresses. An essential characteristic for any synthetic liner used on a dam header is the ability to withstand tensile stresses. Uniaxial tensile tests on the main component of the geocomposite, which is the homogeneous PVC geomembrane, have revealed that its maximum elongation at break is 480%, as shown in Fig. 5. When the geocomposite is considered (geomembrane + needle-punched nonwoven geotextile), its tensile strength exceeds 50 kN/m, and the corresponding tensile elongation is at least 65%. If this value is surpassed, the geotextile layer is destroyed, and the material exhibits geomembrane properties.

Tear resistance is another important property of the geocomposite. In axisymmetric loading conditions, the material demonstrates high performance in the bursting test, which simulates counter-pressure effects.

As shown in Fig. 6, the test involves placing the geomembrane on a test table and securing it, then applying hydrostatic pressure until the material ruptures.

This test simulates a typical scenario where a polymer liner is used on the head of a dam.

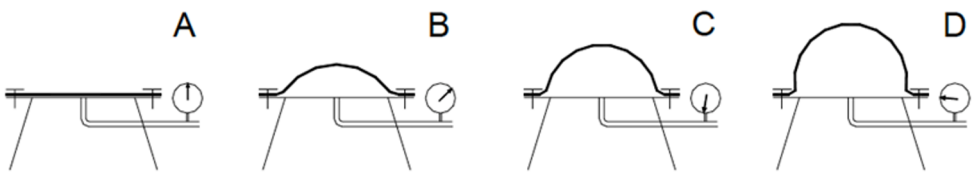

Fig. 6. Scheme of the tensile strength experiment conducted on the geocomposite. Panel A represents the start of loading with a pressure of 0 kPa. As the pressure increases, the geocomposite stretches (panel B). When the pressure reaches a certain point, the geotextile breaks, causing the pressure to increase even further (panel C). The geomembrane continues to stretch until it reaches its maximum elongation at a pressure of 160 kPa, as shown in panel D.
At this point, the elongation at break exceeds 270%

Burst resistance is an essential property of synthetic liners used in construction. The ability to resist subsidence and restore the original shape without losing properties under load is crucial (see Fig. 7).

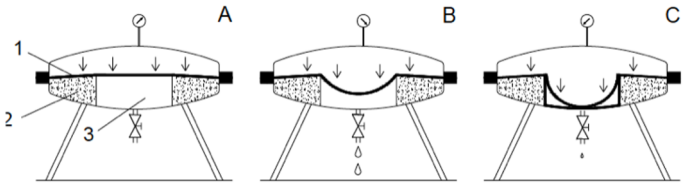

Fig. 7. Burst resistant testing scheme

Puncture resistance: Very often, impervious elements are installed on the uneven and poorly prepared faces of dams, particularly in new or renovated earthworks made of stone or rock with a sufficiently large fraction, or in concrete structures. Any irregularities or protrusions on the surface of the pressure face create stress concentration zones around them [4, 11, 12, 13, 16, 17, 20]. The results presented in this study are due to the homogeneity of the material and its elastic deformation property.

Aging: The composition and quality of the main element of the geocomposite impervious blanket - the geomembrane - determine its properties over time. Currently, the expected service life of Sibelon geocomposite liners by Carpi Tech in the exposed state is over 40 years. The small number of installation failures is due to older types of geomembranes that are no longer manufactured or design errors. Geomembranes developed and produced today have the advantage of better design, production, inspection, and installation technology, which increases the expected service life.

Geocomposites typically age faster in areas of greatest environmental exposure, such as on the south side (in the northern hemisphere), in the overlying area above the maximum water level, and in the variable level zone. However, these areas are the most easily accessible, so routine and emergency repairs, including replacement, will not be a major costly problem [4, 11, 12, 13, 16, 17, 20].

Exposure to heat and UV radiation often causes the loss of some plasticizers in PVC geomembranes, resulting in reduced flexibility depending on the type of plasticizer used. Therefore, the choice of plasticizers is extremely important. At low molecular weight, plasticizers can take months to evaporate, making the geomembrane very brittle.

Waterproofing is not compromised. Samples of geomembranes installed in six dams in Italy that had been in operation for 19 to 22 years were examined for plasticizer content, mechanical and tensile strength, and impermeability. The reduction in plasticizer content is reflected in a slightly higher modulus of elasticity and resistance. The performance of the system was not impaired, and the filtration coefficient was "fairly constant over time". The refurbishment of exposed PVC geomembranes installed in channels owned by ENEL company confirmed identical positive results. Although some deterioration in the chemical and mechanical properties of the geomembrane was observed, the results from long-term use in contact with salts, acids, and hydrocarbons can still be considered positive.

The condition of the welds is satisfactory and unchanged over time. Thus, if the geomembrane needs to be repaired over time, welding the new material to the old material is possible and not difficult.

4 Discussion

The main advantage of using a geocomposite impervious liner on the downstream face of low-cement and lean low-cement concrete dams is that it minimizes cement consumption necessary for the stability of the structure. Additionally, it reduces requirements and costs associated with the preparation and waterproofing of horizontal interlayer joints.

Compared to other types of cladding such as concrete, reinforced concrete, loam, and other liners, geocomposite installation boasts a high speed of installation (1,000 m^2/shift or

more) which leads to significant reductions in construction time and a higher cost-effectiveness of the project. Additionally, scheduled repairs of the geocomposite are not necessary, and any damage can be underwater repaired with patches without impacting the operation of the HPP.

5 Conclusions

1. The most reliable and modern solution for waterproofing the discharge face of dams is a geocomposite liner. It consists of a homogeneous polyvinyl chloride geomembrane with a thickness ranging from 1.5 mm to 5.0 mm or more, which is heat-welded in the production process with a needle-punched nonwoven geotextile. The geotextile has a density ranging from 200 g/m^2 to 800 g/m^2. The advantage of using this type of liner is that it reduces the cement consumption to the minimum required for the stability of the structure. Additionally, it reduces the requirements and costs for preparing and waterproofing interlayer horizontal joints.
2. Geocomposite liners are highly resistant to ageing and retain their properties even after 30-50 years of exposed use. In closed systems, their service life is virtually unlimited.

One area for future research is to determine the angle of internal friction and adhesion (friction parameters) between the geotextile substrate of the geocomposite and the foundation in dry, water-saturated, and frozen states.

It is necessary to investigate the operation of geocomposites on the surface of ground mass, which can be in both frozen and thawed states, to obtain competitive advantages in projects in harsh climatic conditions.

So far, there have been no such tests conducted on polyethylene geomembranes.

This work was financially supported by the Ministry of Science and Higher Education of Russian Federation (grant # 075-15-2021-686). Tests were carried out using research equipment of The Head Regional Shared Research Facilities of the Moscow State University of Civil Engineering

References

1. ICOLD Bulletin 75. Roller-compacted concrete for gravity dams.
2. ICOLD's 80th Annual Meeting in Kyoto. Hydropower & Dams. 2012. Vol. 19. Is. 4. P. 24-26.
3. Isao Nagayama. 30 years' history of roller compacted concrete dams in Japan / Isao Nagayama, Shigeharu Jikan // Roller compacted concrete dams. – 2003. – Pp. 27-38.
4. Aniskin, N. A. Low-cement content gravity dam as an alternative for Pskem HPP / N. A. Aniskin, A. M. Shaytanov, M.V. Shaytanov, S.N. Khokhotva // E3S Web of Conferences. Conference Proceedings of FORM 2021. – 2021.
5. Bayagoob K., Bamaga S. Construction of Roller Compacted Concrete Dams in Hot Arid Regions. Materials. 2019. Vol. 12 (19). P. 1-14.
6. Wanga L., Yang H.Q., Zhou S.H., Chen E., Tang S.W. Mechanical properties, long-term hydration heat, shrinkage behavior and crack resistance of dam concrete designed with low heat Portland (LHP) cement and fly ash // Construction and Building Materials. 2018. Vol. 187. P. 1073-1091.

7. Dunstan M.R.H. How fast should an RCC dam be constructed // Proceedings. Seventh international symposium on roller compacted concrete (RCC) dams. Chengdu, China. October 2015.
8. Zhang Xiao-fei, Li Shou-yi, Li Yan-long, Ge Yao, Li Hui. Effect of superficial insulation on roller-compacted concrete dams in cold regions. Advances in Engineering Software. 2011. Vol. 42. P. 939-943.
9. Wanga L., Yang H.Q., Zhou S.H., Chen E., Tang S.W. Mechanical properties, long-term hydration heat, shrinkage behavior and crack resistance of dam concrete designed with low heat Portland (LHP) cement and fly ash // Construction and Building Materials. 2018. Vol. 187. P. 1073-1091.
10. ASTM C150 / C150M-21, Standard Specification for Portland Cement, ASTM International, West Conshohocken, PA, 2021.
11. ICOLD Bulletin 135, 2010, Geomembrane sealing systems for dams.
12. Kalpakci V., Bonab A.T., Ozkan M.Y., Gulerce Z. Experimental evaluation of geomembrane/geotextile interface as base isolating system // Geosynthetics International. 2018. Vol. 25. P. 1-11.
13. Giroud J. P. Leakage Control using Geomembrane Liners // Soils and Rocks. 2016. Vol.3. P. 213-235.
14. Yang P., Xue S.B., L. Song, Zhu X.W. Numerical simulation of geomembrane wrinkle formation // Geotextiles and Geomembranes. 2017. Vol. 6. P. 697-701.
15. Rao Martand S., Abdelmalek B. Thermal conductivity of geosynthetics. Geotextiles and Geomembranes. 2013. Vol. 39. P. 1-8.
16. Bannour, H; Goblet, P; Mendes, M, Touze-Foltz, N. Numerical study of advective flow through composite liners // Environmental Geotechnics. 2016. Vol. 3. P. 379-385.
17. Moutafis N.I., Thanopoulos Y. The geomembrane faced hardfill dam // Hydro 2015, Bordeaux, France. 2015.
18. T. Fujisawa, T. Sasaki. Development of the trapezoidal CSG dam. Hydropower & Dams. 2012. Vol. 19. Is. 3. P. 58-63.
19. Hokkaido Prefecture. Toubetsu dam: an example of the innovative CSG technology. Hydropower & Dams. 2012. Vol. 19. Is. 3. P. 64-67.
20. GRI Guide GS12. Lifetime prediction of Geosynthetics Using Time-Temperature Superposition (TTS) and Arrhenius Modeling // Geosynthetic Institute, 2012.