Design parameters of circular multidirectional spherical knife tools

Ibrat Ismailov*

Karshi Engineering - Economics Institute, Uzbekistan, 225, Mustakillik ave, 180100, Karshi, Uzbekistan

Abstract. The aim of the research is to justify the design and geometric parameters of spherical blade working tools for preparing the soil for sowing gourds. The scheme of spherical knife working body is given. The basis of the working body is the thickness of the flange, the crevice of the spherical knife, the depth of treatment, the height of the knife element. Analytical dependences for determining the basic parameters of spherical knife working bodies are obtained. Theoretical researches show that for quality ripping of soil with minimal traction resistance the diameter of spherical blade working elements must be 400 mm, thickness of blade 15 mm, number of knives in blade must be 12 units. The length of the spherical blades is 110 mm.

Keywords: Soil treatment methods, tillage, no-tillage, mini-till, no-till, resource saving, gourds, geometric dimensions, knife elements.

1 Introduction

Asia leads the world in the production of melons. About 77% of the cultivated area of these crops is concentrated here. Europe accounts for 9.5%, America and Africa for 7% each of the world's cultivated area of melons. It should be noted that in recent years, against the background of reduction of areas under melons in Africa, they steadily increase on other continents. The most significant growth is observed in Asia.

Over the past 20 years, the world consumption of vegetables, gourds and fruits has been growing by an average of 5-7% per year. Uzbekistan not only meets the needs of its population, but also exports agricultural products and has great potential in this area. One of the conditions for effective melon cultivation is high-quality soil preparation for sowing.

For its qualitative performance it is necessary to take into account the peculiarities of applied technologies and natural-production conditions of the region. In Uzbekistan, on average, there are 320 sunny days a year, there is a consistent change of seasons, which creates optimal conditions for growing high-quality varieties of melons. Therefore, the gifts of the generous Uzbek land - melons have become a real brand and are famous all over the world.

As part of the loosening-levelling device for pre-sowing tillage it is proposed to use rotary working bodies with spherical knife elements. For effective operation of such a working body it is necessary to justify its design and technological parameters. Scientific research was carried out Aldoshin, N [1], Kuznetsov Yu.A. [2], Mamatov, F [3],

* Corresponding author: ismailov@qmii.uz

Toirov I. [4], Batirov Z [5], Khamrakul Ravshanov [6], Dustmurod Chuyanov [7], Sanjar Toshtemirov [8], T. X. Razzokov [9], Abed N.S [10], Gulyamov G [11], Eshqobilov O.Kh. [12], Tavbay Khankelov [13], Kh. Fayzullaev [14], Mirzaev, B. [15], Umurzakov, U. [16], Upadhyay, G. [17], Šarauskis, E. [18], Ishaq, M. [19], Jiang, X. [20].

Their choice cannot be made arbitrarily, as there are rational limits to their variation, and the geometric elements of the design are linked to each other by functional relationships.

2 Materials and methods

In the current stage of disc tillage machines, solid or notched discs with a constant curvature of their surface are used. Working tools with variable surface curvature are usually not used. In this connection we also use knife elements with constant curvature of the blades. The tool is mounted with a zero angle of attack. To increase the processed surface of the field, the blade elements are installed on the disc with the curvature directed in different directions from the plane of their attachment. Blades are sharpened on the outer and inner sides of the blade elements. Recommended angle of blade sharpening $i = 15...20^0$.

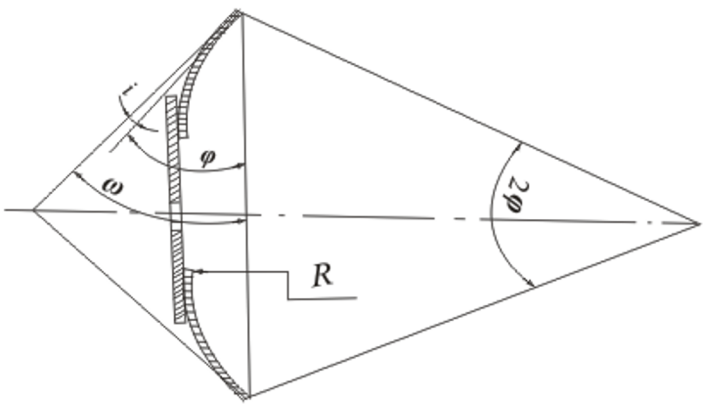

Fig. 1. Geometric dimensions in the equatorial section of the spherical knife blades

The basic geometric parameters of the spherical knife working tool include its diameter, radius of curvature, half of the angle at the apex of the disc sector. As additional, the angle of the sharpening cone ω and sharpening angle *i*. Define them as follows. For $k = 5$ and a working depth of 8 cm we have a blade diameter of 400 mm. From dependence 1, the radius of curvature of the knife element is 455 mm. The thickness of the blade element is 3.2 mm. Taking into account the safety margin, we accept $\delta = 4mm$. The width of the knife element in terms of its strength is taken 40 mm.

In connection with the installation of knife elements on the disk alternately, where directed curvature in different directions from the plane of their mounting on the flange, the width of the capture of such a working body will be 10 cm. On a flange of the working body, it is possible to arrange 12 knife elements, taking into account their geometric dimensions and fixing. In this case 6 of them will be directed by the curvature in different directions (figure 2).

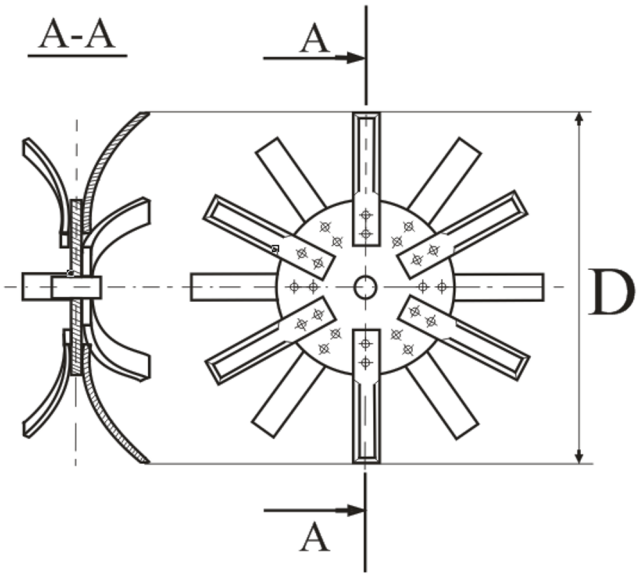

Fig. 2. Rotary tillage tool with spherical blade elements

For strip tillage in the sowing area it is necessary to combine blade tools in batteries. The diagram of such a battery is shown in figure 3.

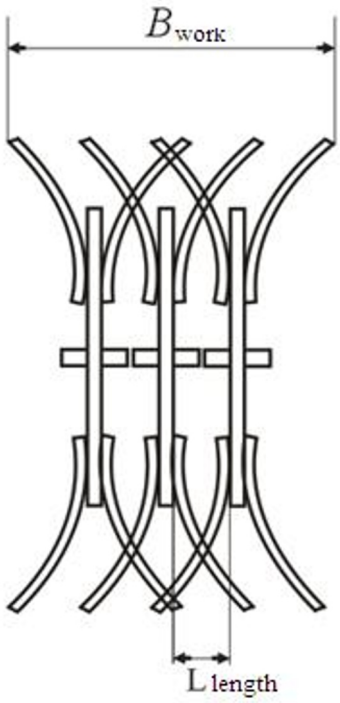

Fig. 3. Diagram of the disk battery with multidirectional spherical knife elements

The resistance of the disk battery is proportional to the working width of the implement, so let's determine the specific traction resistance $F_{sp.d}$ disc-shaped work tools:

$$F_{sp.d} = \frac{k \cdot F_{kn.d}}{B_{bat}}, H/m, \tag{1}$$

where k - number of knife discs in the battery, *thing;*

$F_{kn.d}$ - knife disk drag, *H;*

B_{bat} - design working width of the disc battery, *mm;*

During the operation of the knife disc, the knives, performing a complex plane-parallel motion, alternately cut into the soil. On the basis of the conducted research the traction resistance was determined $F_{kn.d}$ of the knife disk with the following dependence:

$$F_{kn.d} = \sum_{i=1}^{n_{kn}} \frac{\lambda \cdot \sin(\varphi_A + \varphi_t(i-1)) - 1}{\sqrt{\lambda^2 - 2\lambda \sin(\varphi_A + \varphi_t(i-1)) + 1}} \cdot (F_{res} + F_{side}), H, \tag{2}$$

where n_{kn} - number of knives on the disc;

λ - kinematic parameter of the knife disk;

φ_A - center corner of the point A the nose of the knife touches the surface of the ground, *degree;*

φ_t - angle of disc rotation during the time of the blade movement in the soil, *degree;*

F_{res} - resistance to knife cutting of soil with stubble residues, *H;*

F_{side} - soil resistance of the side surface of the blade, *H.*

The component of the blade traction resistance for cutting the soil layer will be determined taking into account its geometric parameters (figure 4):

$$F_{res} = \delta \cdot l_{bl} \cdot t_{bl}, H, \tag{3}$$

where δ - specific cutting resistance, *Pa;*

l_{bl} - working length of the knife blade, *mm;*

t_{bl} - knife blade thickness, *mm.*

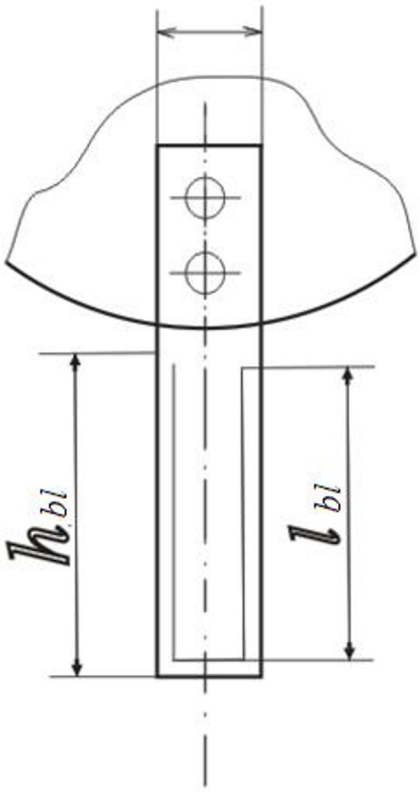

Fig.4. Geometric parameters of the knife disk blade

The component of the traction resistance of the soil on the side surface of the blade, taking into account its geometric parameters, will be determined by the dependence:

$$\mathrm{F}_{\mathrm{side}} = k_{ut.i} \cdot h^2{}_{rad}, H, \tag{4}$$

where $k_{ut.i}$ - specific soil resistance for the i - th row of blade discs, *H/m;*

h_{rad} - soil cutting depth of the blade disc, *mm.*

Thus, the traction resistance of the battery of knife discs will be expressed by the dependence:

$$F_{side} = k \cdot \sum_{\mathrm{i=1}}^{\mathrm{n_{kn}}} \frac{\lambda \cdot \sin(\varphi_{\mathrm{A}} + \varphi_{\mathrm{t}}(i-1)) - 1}{\sqrt{\lambda^2 - 2\lambda \sin(\varphi_{\mathrm{A}} + \varphi_{\mathrm{t}}(i-1)) + 1}} \cdot (\delta \cdot l_{bl} \cdot t_{bl} + k_{ut.i} \cdot h^2{}_{rad}), \mathrm{H}, \tag{5}$$

The maximum possible number of knives on the disk (figure 5) will be determined from the geometric parameters of the knife and the disk on which they are fixed:

$$n_{kn} = \frac{C_{len}}{l_{fornkn}}, thing, \quad (6)$$

where $C_{len} = 2\pi \cdot R_d$ disc circumference, *mm;*

R_d - disc radius, *mm;*

l_{fornkn} - he length of the base (fastening part) of the knife, *mm.*

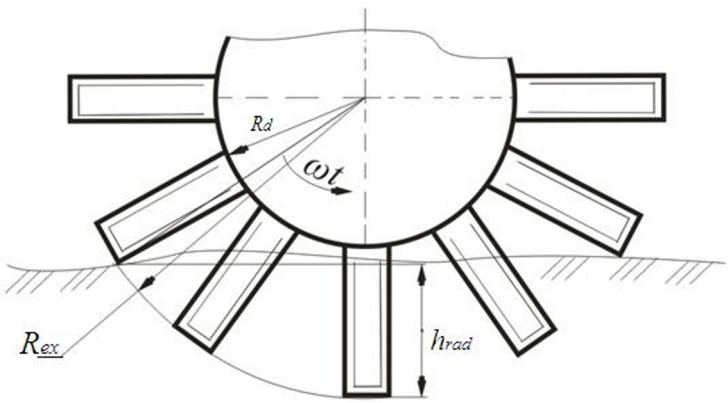

Fig. 5. Geometric parameters of the knife disk

Based on the geometric parameters of the knife (figure 3), the length of its base can be represented by the dependence:

$$l_{fornkn} = 2(R_{ex} - R_{rad}), \text{ mm}, \quad (7)$$

where R_{ex} - outer radius of the blade disc, *mm.*

Then the maximum possible number of knives on the disk, taking into account will be determined by the dependence:

$$n_{kn} = \frac{2\pi \cdot R_d}{R_{ex} - R_d}, thing, \quad (8)$$

The resulting fractional value of the number of knives n_{kn} knife must be rounded down to a whole value.

The most important task in the operation of knife disk batteries is to minimize the energy consumption for chopping the surface layer of the sown soil. This is achieved by influencing the soil of the knife disc working elements while fulfilling the condition of stable cutting with sliding:

$$\alpha_{kn} \langle (90^0 - \varphi), \quad (9)$$

where α_{kn} - cutting angle, *degree;*

φ - angle of external friction of the blade on the soil with stubble residues, *degree.*

3 Results and discussion

Based on preliminary one-factor experimental studies, the most significant factors determining the design parameters of disc-shaped multidirectional spherical knife working tools were identified. These include: disc diameter, number of knives, and distance between the knife discs. The limits of variation of these parameters were also determined. The quality of soil tillage, i.e. its crumbling, was used as a criterion for evaluating the functioning of the working body.

When cultivating the soil in the sowing area with disc-shaped multidirectional spherical blade tools, the following performance indicators were obtained, shown in figures 6 - 7.

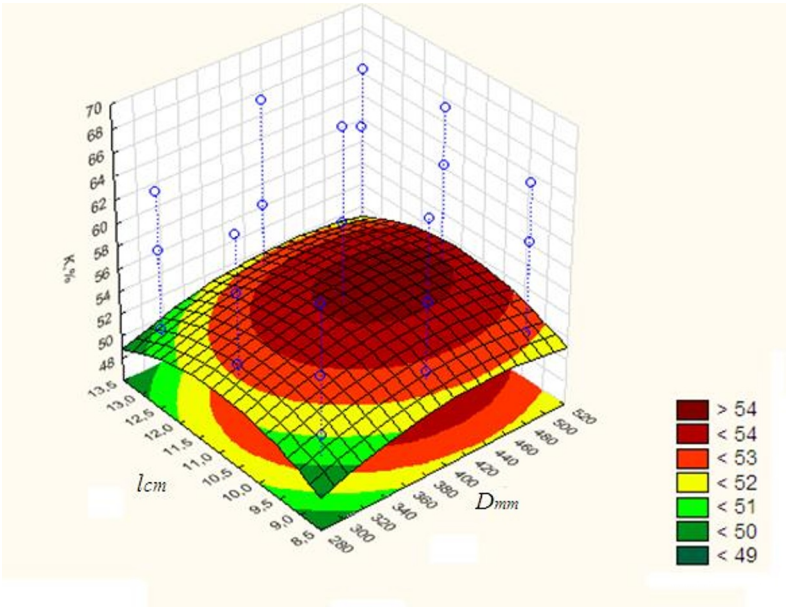

Fig. 6. Response surface (tillage quality) as a function of diameter D_{kd} of the disc−shaped, multidirectional spherical knife blades and distances l_{kd} between them in batteries with four knife cells

The zone of optimal parameters of the indicators presented in figure 6 is most clearly shown on the map of response level lines figure 7.

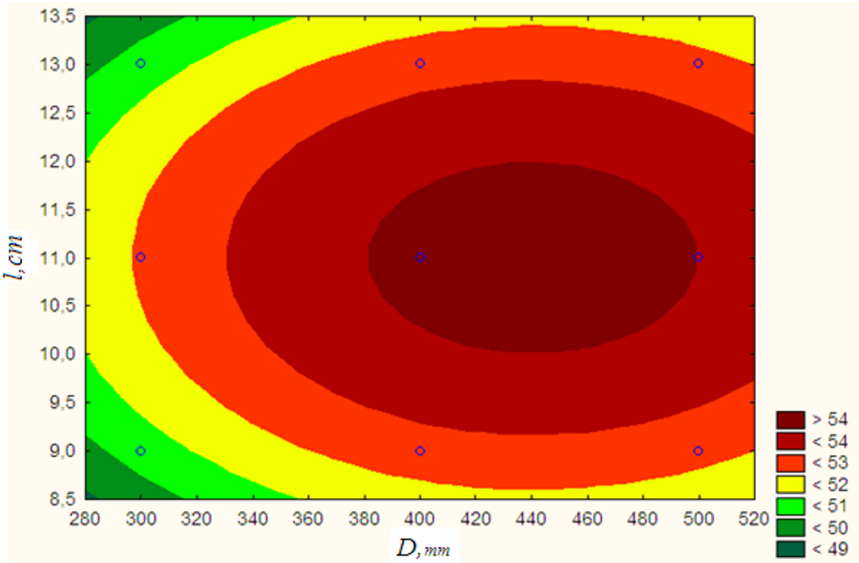

Fig. 7. Map of response level lines (tillage quality) depending on diameter D_{kd} of the disc-shaped, multidirectional spherical knife blades and distances l_{kd} between them in batteries with four knife cells

Indicators of the ripper working body are similar to those shown in Figures 6 and 7, that with all possible values of the diameter of the working body and the number of blade elements the optimal distance between the discs in the batteries is 11 cm.

4 Conclusions

Based on the data in Figure 6, we can conclude that the rational size of the working bodies are: the diameter of the disc blade 400 mm, the number of knives on a disk of 12 pieces and the distance between the discs in the battery 11 cm. In this case, the required quality of pre-sowing tillage (K=80%) is not achieved in all cases of disk loosener use. This indicates the need to use additional working elements in the design of the combined tillage device.

References

1. Aldoshin, N., Mamatov, F., Ismailov, I., Ergashov, G. Development of combined tillage tool for melon cultivation // 19th international scientific conference engineering for rural development Proceedings, Jelgava, 20.-22.05.2020. Volume 19. ISSN 1691-5976. DOI:10.22616/ERDev.2020.19.TF175.
2. Kuznetsov Yu.A., Aldoshin N.V., Mamatov F.M., Kravchenko I.N., Kupreenko A.I., Ismailov I.I., Kalashnikova L.V. Loosening and leveling device for preparing soil for melon, INMATEH - Agricultural Engineering appearing in print (ISSN 2068 – 4215) and on-line (ISSN 2068 – 2239)Vol. 64, No. 2 / 2021.
3. F. Mamatov, I. Ergashev, S. Ochilov, X. Pardaev, Jour of Adv Research in Dynamical & Control Systems, 12(07), (2020) doi: 10.5373/JARDCS/V12SP7/20202336 ISSN1943-023X

4. Toirov I., Batirov Z. and Sharipov E. Theoretical prerequisites for improving durability of fixed rolling bearing joints restored with anaerobic. E3S Web of Conferences 365, 04020 (2023)
5. Batirov Z, Toirov I, Boymuratov F. and Sharipov Sh Layered application of mineral fertilizers with the coulter ripper of a combined unit 2021 IOP Conf. Series: Materials Science and Engineering 1030, 012168
6. Khamrakul Ravshanov, Khayriddin Fayzullaev, Ibrat Ismailov, Dilmurod Irgashev, Sukhrob Mamatov. The machine for the preparation of the soil in sowing of plow crops under film// IOP Conf. Series: Materials Science and Engineering 883 (2020) 012138 IOP Publishing doi:10.1088/1757-899X/883/1/012138.
7. Dustmurod Chuyanov, Golib Shodmonov , Ibrat Ismailov, Gayrat Ergashov and Akramjon Sadikov. Traction resistance of the combined machine plough// E3S Web of Conferences 264, 04036 (2021) CONMECHYDRO – 2021. doi.org/10.1051/e3sconf/202126404036.
8. Sanjar Toshtemirov, Serobjon Mustafayev, Alham Xo'jayev, Isomiddin Mamatkulov and Farrukh Boboev. Technology and machine parameters for preparing the soil for sowing cotton, E3S Web of Conferences 264, 04046 (2021).
9. T. X. Razzokov, S. J. Toshtemirov, Sh.A. Latipov Physico - mechanical properties of the seed pile of foddercrops E3S Web of Conferences 365, 04027 (2023).
10. Abed N.S., Gulyamov G., Tuhtasheva M.N., Eshkobilov O.Kh. Engineering composite materials for the cotton processing industry. E3S Web of Conferences 264, 05053, (2021). doi: 10.1051/e3sconf/202126405053
11. Gulyamov G., Eshkobilov O.Kh. Composite polypropylene polymer materials that work in contact with raw cotton. In E3S Web of Conferences 264, 05055 (2021). doi: 10.1051/e3sconf/202126405055
12. Eshqobilov O.Kh., Tukhtasheva M.N. Investigation of antifriction properties of composite epoxy material in interaction with raw cotton. International Journal of Mechatronics and Applied Mechanics, 2022, Issue 12. pp. 134–139. doi:10.17683/ijomam/issue12.20
13. Tavbay Khankelov, Zokir Maksudov, Nafisa Mukhamedova1 and Shavkat Tursunov // Crushing and screening complex for the production of compost from organic components of municipal solid waste // E3S Web Conf. Volume 264, 2021 International Scientific Conference "Construction Mechanics, Hydraulics and Water Resources Engineering" (CONMECHYDRO - 2021) // https://doi.org/10.1051/e3sconf/202126401026.
14. Kh. Fayzullaev ,N. Aldoshin, F. Mamatov and I. Ismailov. Energy-Saving Machines for Soil Treatment in Melon Production// Cite as: AIP Conference Proceedings **2612**, 050026 (2023); doi.org/10.1063/5.0125003.
15. Mirzaev, B., Mamatov, F., Chuyanov, D., Ravshanov, X., Shodmonov, G., Tavashov, R and Fayzullayev, X. Combined machine for preparing soil for cropping of melons and gourds // XII International Scientific Conference on Agricultural Machinery Industry. doi.org/10.1088/1755-1315/403/1/012158.
16. Umurzakov, U., Mamatov, F., Aldoshin, N., and Mirzaev, B. Exploration of tillage technologies in the Republic of Uzbekistan // ICECAE 2020 IOP Conf. Series: Earth and Environmental Science 614(2020) 012168. IOP Publishing. doi:10.1088/1755-1315/614/1/012168.
17. Upadhyay, G., & Raheman, H. Comparative analysis of tillage in sandy clay loam soil by free rolling and powered disc harrow. Engineering in Agriculture Environment and Food, 12, 118e125. (2019).

18. ŠARAUSKIS, E. – ROMANECKAS, K. – JASINSKAS, A. – KIMBIRAUSKIENĖ,R. – NAUJOKIENĖ, V. 2020. Improving energy efficiency and environmental mitigation through tillage management in faba bean production. In Energy, vol. 209, pp. 118453.
19. Ishaq, M., Ibrahim, M., Lal, R., 2001. Tillage effect on nutrient uptake by wheat and cotton as influenced by fertilizer rate, Soil and Tillage Research 62 (1–2): 41–53.
20. Jiang, X., Li, Z., Hou, L., Wang, Y., Wang, X., Yan, H., 2005. Impacts of minimum tillage and no-tillage systems on soil NO-3-N content and water use efficiency of winter wheat/summer corn cultivation. Transactions of the Chinese Society of Agricultural Engineering (CSAE) 21(7): 20-24.