Sustainable Smart Helmet For Coal Miners

T. N. P. Madhuri[1*], *P.K.* Abhilash[2], *G.* Vineel Sai[3], *K. K*rishna Sai Gowtham [4], *Manoj Kumar Sharma*[5], Jagadish Shrisaila Haranatt[6]
[1]Assistant Professor, Department of Information Technology, GRIET, Bachupally, Hyderabad, Telangana.
[2]Assistant Professor, Department of Information Technology, GRIET, Bachupally, Hyderabad, Telangana.
[3] Student, Department of Information Technology, GRIET, Bachupally, Hyderabad, Telangana
[4]Student, Department of Information Technology, GRIET, Bachupally, Hyderabad, Telangana
[5]School of Applied and Life Sciences, Uttaranchal university, Dehradun-248007, India.
[6] KG Reddy College of Engineering & Technology, Hyderabad, Telangana.

Abstract: The "Sustainable Smart Safety Helmet for Coal Miners" paper aims to enhance the safety and well-being of coal miners by implementing an innovative monitoring system. The paper utilizes the ESP32 microcontroller, integrated with a suite of sensors, including DHT11 for temperature and humidity measurement, MQ135 for gas detection, IR Sensor for helmet status monitoring, and a Heartbeat Sensor for real-time pulse rate tracking. A Buzzer is also integrated to provide immediate audible alerts when potential hazards are detected. The system continuously collects sensor data in real-time, which is then processed and analysed within the ESP32 microcontroller. The data is transmitted to a user-friendly mobile application developed using Blynk. Through the Blynk app, miners and relevant personnel receive critical information regarding environmental conditions and the miners' vital signs. In case of any hazardous conditions, the system generates prompt alerts, triggering the Buzzer and sending notifications to the app to ensure timely responses to potential threats. By combining advanced sensor technology, real-time data monitoring, and swift alert mechanisms, this paper endeavours to safeguard the lives of coal miners in hazardous working environments, providing them with a smart safety solution and empowering them to work with increased confidence and security.

* Corresponding author: madhuri845@grietcollege.com

1 INTRODUCTION

The "Sustainable Smart Safety Helmet for Coal Miners" paper aims to enhance the safety of coal miners by utilizing the ESP32 microcontroller integrated with sensors such as DHT11, MQ135, IR Sensor, and Heartbeat Sensor. The system continuously monitors temperature, humidity, gas levels, heart rate, and helmet status in real-time. When potential hazards are detected, it activates a Buzzer and sends immediate alerts to a user-friendly mobile app developed using Blynk. This innovative solution aims to reduce risks and ensure timely response to potential dangers in coal mining environments.

Parameters monitored by the paper:

1.1 Temperature:

The DHT11 sensor monitors the ambient temperature inside the coal mine. This parameter is crucial for ensuring the miners' comfort and safety, as extreme temperatures can lead to heat-related illnesses or discomfort.

1.2 Humidity:

The DHT11 sensor also measures the humidity levels inside the mine. Monitoring humidity is essential to prevent condensation and

maintain a comfortable working environment for the miners.

1.3 Gas Concentration:

The MQ135 sensor detects and measures the concentration of harmful gases, such as carbon monoxide and methane, in the mine atmosphere. Monitoring gas levels is critical to prevent potential explosions, fire hazards, and respiratory issues.

1.4 Heart Rate:

The Heartbeat Sensor tracks the miners' heart rate in real-time. Monitoring heart rate provides insights into their physical condition and helps identify any signs of distress or overexertion.

1.5 Helmet Status:

The IR sensor monitors the status of the miners' safety helmets. It ensures that all miners are wearing their helmets properly, reducing the risk of head injuries in case of accidents.

RATING	INDEX	CO2 PPM	MEANING
Excellent	1	0 - 400	The air inside is as fresh as the air outside.
Fine	2	400 - 1000	The air quality inside remains at harmless levels.
Moderate	3	1000 - 1500	The air quality inside has reached conspicuous levels.
Poor	4	1500 - 2000	The air quality inside has reached precarious levels.
Very Poor	5	2000 - 5000	The air quality inside has reached unacceptable levels.
Severe	6	from 5000	The air quality inside has exceeded maximum workplace concentration values.

Fig 1. Air Pollution Levels

MEMBERSHIP FUNCTIONS	RANGE (°C)
COLD	8-14
COOL	13-19
NORMAL	18-22
WARM	21-27
HOT	26-32
VERY-HOT	31-39
EXTR-HOT	38-44

Fig. 2. Temperature levels

2 Literature Survey

An Arduino Uno microcontroller was used and connected to the LM35. Coal field environmental parameters are communicated using XBee transmitters and receivers and linked together using XCTU software, allowing timely action to be taken in critical situations.

The helmet is equipped with push buttons, buzzers, and ZigBee transmitters. An Arduino microcontroller is used to detect and monitor variables within the mine. Live readings are provided by a temperature sensor, a humidity sensor, an IR flame sensor, and a gas sensor. In abnormal situations, warning messages are sent to the system and displayed on an LCD screen connected to the Arduino at the coalfield entrance. Smart helmets are also calculatedon a microcontroller with only push buttons connected[1].If a worker needs medical assistanceor feels unwell, a panic button can be used to send an emergency message to the control roomto provide medical assistance to that worker. The ZigBee protocol was used to ensure secureand reliable communication with the control room. Coal field environmental parameters are communicated using XBee transmitters and receivers and linked using XCTU software to allow for necessary action.

This paper has two sections: the transmitter section and the receiver section. The transmitter section is placed in underground mining areas, while the receiver section is placedon a person's helmet[2]. The transmitter section consists of an ATmega328 microcontroller, a collision sensor, an MQ5 gas sensor, a humidity sensor, and an RF transmitter, while the receiver section is connected to a buzzer, an LCD display, and an RF receiver. If detected values are higher than a pre-defined limit, a buzzer gives a warning signal, and the LCD display shows the status. The potentiometer is implemented to lower the delicacy of the sensor. To detect collisions in underground mining, a piezoelectric sensor is used[3]. The receiver section is equipped with a buzzer for audio warning and an LCD display to display the collected information. The system is developed, collects the dangerous gases, pressure, and temperature information, and transfers it to the person's helmet, allowing them to take precautions or rescue the mine workers[4]. In the future, the system will be sent to the control room or manager's office using an RF transmitter.

This system is divided into two parts Transmitter and Receiver. The MQ 02 gas sensoris used to detect toxic gas content in mines. Value. If 990 ppm is exceeded, a "gas alarm" message is sent. DHt11 detects temperature and humidity[5].If the temperature value exceeds 36, the message "Temperature Alarm" will be sent. If the humidity value exceeds 94, the message "Humidity Warning" will be sent. vibration sensor Detect sudden changes in movement. If c = 0, a

"vibration warning" message is sent. IR sensor It detects obstacles, and these sensors are connected to the Arduino[6]. If b = 1, the message is sent. Say "obstacle warning". A threshold is set for each reading from these sensors, and if there is a threshold, When the value exceeds the threshold, a buzzer is activated and an alert is sent to the receiving module. mobile phone. The recipient will receive an alert along with their mobile phone, and certain actions will be taken.

The main objective of this paper is to evacuate the area and rescue the workers insidethe mines as soon as possible. The helmet is equipped with highly efficient and sensitive sensors that are mounted on it[7]. These sensors can be connected to external control stations, and the data they collect can be used for worker safety and protection of valuable commodities. The block diagram of the proposed system includes various sensors and an alarm system. The Arduino Uno is a microcontroller board that relies on the ATmega328P. The sensors in the system include temperature sensors (LM35), oxygen sensors, humidity sensors, and gas sensors. The alarm system consists of a buzzer and a vibrating motor[8].The crucial components in this context are the vibration motor or sensor, buzzer, LED, LCD, andalarm system. The vibration motor is used to create vibrations on the nerves of the human neck, while the buzzer works in coordination with the vibration motor[9]. The LED is used forlight signaling, and the LCD is used for continuous monitoring and control. The sensors

mounted on the helmet are tested for their capabilities and specific functions, and the alarming system functions effectively based on inputs from the sensors.

The research paper discusses the design and implementation of a smart helmet for continuous monitoring of environmental parameters in underground coal mines[10]. The objective of the paper is to improve the safety of miners by detecting toxic gases and insufficient oxygen levels and monitoring miners' pulse rates. The paper highlights the highnumber of mining accidents in India and the importance of early detection and rescue operations. The sensors are placed in the helmet and continuously monitor environmental conditions[11]. The data collected by the sensors is transmitted wirelessly using Zigbee technology. It describes the hardware components used, including the MSP430G2553 microcontroller, carbon monoxide sensor (MQ-7), methane gas sensor (MQ-4), carbon dioxide sensor (MG811), and Zigbee module. The research paper concludes that the developed system enhances the security and safety of underground coal miners[12]. It enables the monitoring of a larger area and can help control potential accidents effectively. The system has the potential for further extension, such as incorporating wireless image transmission capabilities using Zigbee technology.

The research paper emphasizes the significance of worker safety in the mining industry, where accidents and fatalities are prevalent. It highlights that the absence of adequate safety measures, such as the utilization of protective gear like helmets, can contribute to these incidents[13]. To address this issue, the proposed system incorporates a limit switch to determine whether a miner has taken off their helmet. Moreover, an accelerometeris employed to identify falls or situations where a worker might lose consciousness. To transmit data from the underground mine to the base station, the system utilizes Zigbee wireless technology. This wireless communication network is chosen due to its capability to provide long-distance communication in a mesh topology[14]. The base station receives real-time data from the sensors and displays it on a PC. In case of an emergency, workers have accessto an alert button to notify the base station[15]. The hardware components employed in the system consist of the ADXL335 accelerometer for detecting falls, metal oxide semiconductor (MOS) sensors for monitoring air quality, and a limit switch for detecting helmet removal.
In summary, the research paper presents a system that aims to improve safety in coal mines by monitoring air quality in real-time, detecting hazardous events, and ensuring the appropriate use of protective equipment[16]. The use of wireless sensor networks and Zigbee technology facilitates effective communication between the underground mine and the basestation.

2 Challenges in Existing Systems

3.1 Sensor Calibration: Calibrating sensors to provide accurate and consistent readings is a challenging task, considering the variations in sensor characteristics and environmental factors.

3.2 Wireless Communication: Establishing robust and secure wireless communication between the sensors in the mine and the control station is crucial for real-time data transmission and alerts.

3.3 Power Management: Optimizing power consumption in the smart helmet system to prolong battery life and reduce the need for frequent recharging or replacement is a challenge.

3.4 Threshold Setting: Setting appropriate threshold values for sensor readings to trigger timely alerts without false alarms requires careful calibration and analysis.

3.5 Integration of Sensors: Integrating multiple sensors into the smart helmet system while ensuring compatibility and efficient data processing poses a challenge.

3.6 Reliability and Accuracy: Ensuring the overall reliability and accuracy of the system to avoid false alarms or missed alerts is critical for the safety of miners.

3.7 User Interface Design: Designing a user-friendly interface for the control station and smart helmets to present real-time data and alerts in a clear and understandable manner is essential for effective monitoring.

3.8 Emergency Response Mechanism: Implementing a robust emergency response mechanism that allows miners to send distress signals quickly and receive prompt assistanceis crucial for ensuring their safety in critical situations.

3.9 Data Handling and Analysis: Handling large volumes of sensor data and analyzing it in real-time to identify potential hazards and trends requires efficient data processing and analysis techniques.

4 Existing Models Comparison

The existing systems and this paper share a common goal of enhancing the safety of coal miners through real-time monitoring and alerting. However, there are notable differences and improvements in the current paper that set it apart from the previous systems:

4.1 Microcontroller: The current paper utilizes the ESP32 microcontroller, which offers higher processing power and built-in Wi-Fi capabilities compared to Arduino Uno or MSP430G2553 used in some previous systems. The ESP32's advanced features facilitate real-time data processing, wireless communication, and integration with the Blynk app for enhanced monitoring.

4.2 Wireless Communication: The current paper uses Blynk, an IoT platform, for wireless communication with the Blynk app. This allows miners to receive real-time alerts and notifications on their mobile devices, providing timely information even when they are awayfrom the mining area.

4.3 User Interface: The Blynk app used in the current paper offers a user-friendly and intuitive interface for miners and control room personnel to monitor sensor data and receivealerts. The app's graphical interface enhances data visualization and ease of use compared tosome of the LCD-based displays in previous systems.

4.4 Threshold Setting: The current paper allows for customizable threshold setting for each sensor, enabling miners to adapt the system to specific mining conditions and individual preferences. This flexibility improves the system's adaptability and reduces false alarms.

4.1Threat Message: The current paper generates a specific threat message to be sent to the Blynk app in case of potential hazards. This message provides clear and urgent information about a miner in danger, ensuring swift response and appropriate actions.

5 Methodology

The architecture of the "Smart Safety Helmet for Coal Miners" paper is designed to provide a comprehensive and robust system for ensuring the safety of miners working in hazardous environments. The paper architecture consists of multiple interconnected components, including the hardware components, sensors, microcontroller, communication modules, and the software infrastructure.
The figure shows the architecture of this paper. Central processing of this architecture is ESP32 micro controller. To this controller we connect all the sensors i.e., mq135, dht11, IR, heart rate sensor. These sensors collect the data from the surroundings environment of the miner. This esp32 is connected to the app which is bult using blynk. This app is used by the supervisor of the mine so that he can know the situation inside mine.

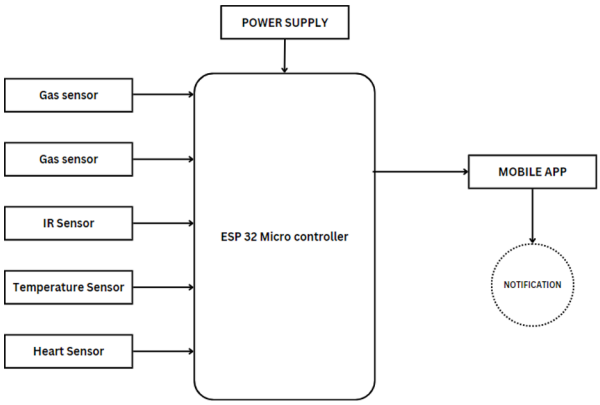

Fig. 3. PROPOSED ARCHITECTURE

The hardware components are connected and integrated to form a cohesive system. The sensors are connected to the appropriate input pins of the ESP32 microcontroller, allowing it to receive data from the sensors. The piezo buzzer is connected to the output pins, enabling the microcontroller to trigger alerts.

Proper wiring and circuit design are crucial to ensure reliable connections and accurate readings. It is essential to follow the datasheets and guidelines provided for each component to correctly interface them with the microcontroller.

Care should be taken to organize and secure the components within the safety helmet, considering factors such as comfort, durability, and ease of use for the miners. Proper enclosures or casings may be used to protect the components from environmental factors, such as dust or impact. The code consists of setup and loop functions for i.nitializing the system, reading sensor data, and performing threshold checks for potential hazards.

In the setup function, the ESP32 is configured to connect to the Wi-Fi network, and Blynk is initialized with the provided authentication token. The IR sensor, buzzer, and heart rate

sensor (pulse sensor) pins are defined as inputs and outputs, respectively. The DHT11 temperature and humidity sensor is set up for reading the environmental data.

In the loop function, the system continuously reads sensor values, including temperature, heart rate (bpm), and gas concentration. The BPM (beats per minute) of the miner is calculated by measuring the pulse count within a predefined time interval. The gas sensor provides the air quality reading, and the IR sensor detects whether the helmet is worn or not.

The sensor data is printed to the serial monitor for debugging purposes. Additionally, the values are uploaded to the Blynk app using virtualWrite for real-time visualization on the user's mobile device.

The code implements threshold checks for each sensors values. If any of the following conditions are met, the system triggers an alert.
Helmet not worn (IR sensor value is HIGH).
Temperature exceeds the defined threshold (temp_treshold).
BPM exceeds the high_pulse_treshold or falls below the low_pulse_treshold. Gas concentration exceeds the gas_treshold.
When a threat is detected, the Buzzer is activated to provide an audible warning, and a specific event is logged to send an urgent message to the Blynk app user. The alert message indicates that a miner is in immediate danger within the mine, and emergency response protocols need to be initiated.

The system operates in a loop with a delay of 3000 milliseconds (3 seconds) between each iteration, providing continuous monitoring and alerting. The Blynk.run() function ensures smooth communication with the Blynk app.

The prototype reads sensor values, sends them to the Blynk app, checks for thresholds, and triggers appropriate actions, such as activating the buzzer and sending threat messages when necessary. It provides real-time monitoring and alerts for potential dangers, ensuring the safety of coal miners.

6 Result Analysis

The "Smart Safety Helmet for Coal Miners" paper aims to enhance the safety of coal miners working in underground mines. By integrating various sensors like temperature, humidity, gas, IR, and pulse rate, the smart helmet continuously monitors the miners' environment and health. The system can detect hazardous conditions such as high gas

levels, elevated temperatures, and obstacles, alerting miners in real-time through alarms and buzzers. In emergencies, it promptly sends alerts to the control room for immediate response and rescue operations. The wearable and user-friendly design ensures miners can comfortably use the helmet during their work shifts. The Blynk app provides miners with real-time data and a user-friendly interface on their smartphones. Successful integration testing ensures seamless communication between the helmet's sensors, microcontrollers, and the central monitoring system. Overall, this paper offers a robust safety system that prioritizes the well-being of coal miners, aiming to reduce accidents and improve emergency preparedness.

Fig. 4. Blynk Dashboard

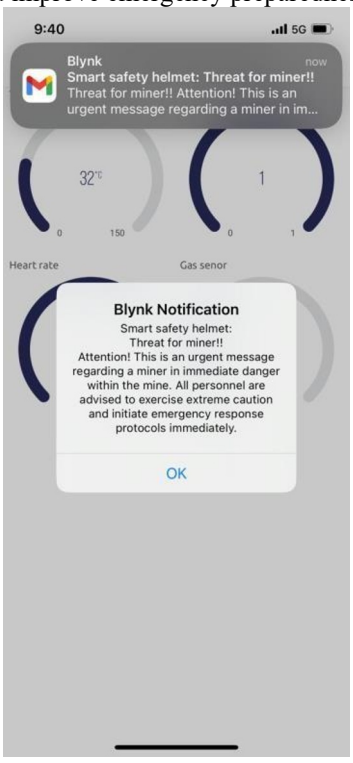

Fig. 5. Notification

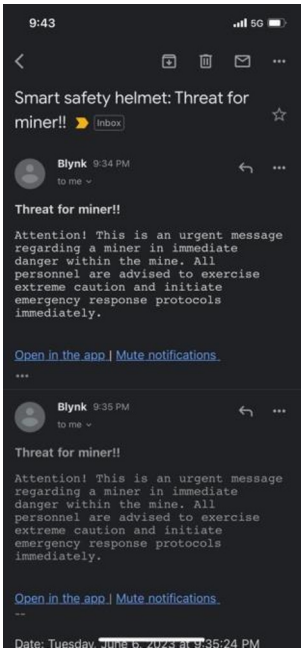

Fig. 6. Email Notification

7 Conclusion

In conclusion, a sustainable helmet has been developed that can detect three types of dangerous events, toxic gas levels, mining helmet removal, excess temperature and inconsistent heartbeat. Withthe help of sensor values we can take suitable precautions to rescue the mining worker. Safety of mining workers is the top priority of this paper. This paper is not only forcoal miners, but also wherever the underground works are done by the workers. The inclusionof heartbeat sensor provides continuous tracking of miners' heart rates and alerting them in case of any abnormal or dangerous fluctuations. Temperature sensor plays a major role in detecting excess temperature, IR tells us whether the miner wears the helmet or not and gas sensor helps in sensing hazardous gases like CO, CO2, CH4, etc.

Overall, the smart safety helmet with gas, heart rate, temperature, and IR sensors represents a significant advancement in miner safety. It enhances the ability to detect, prevent, and respond to potential hazards and create a safer working environment for work.

8 Future Enhancements

By integrating proximity sensors and collision detection technology, smart helmets help prevent mining accidents. These sensors detect the presence of moving machinery, walls, or other obstacles near the miner. Upon detection, the helmet can emit audible or tactile alerts

to warn miners and take immediate action to avoid a collision or an accident. This feature provides an extra layer of protection and greatly reduces the risk of injury in a crash or being trapped in machinery.

To increase safety and improve emergency response, smart helmets can be equipped with GPS or indoor positioning systems. These systems allow real-time tracking of miners' locations within the mine. In the event of an accident, injury or emergency, the helmet can transmit precise location data to rescue workers and control centers. This greatly shortens reaction time and allows for faster rescues, potentially saving lives in critical situations.

Wireless communication capabilities such as integrated radios and Bluetooth can be integrated into smart safety helmets to enable seamless communication between miners and supervisors. This allows miners to communicate with each other and ask for help without the need for additional devices. Additionally, voice command functionality allows miners to perform operations and access information hands-free. This is essential in dangerous environments where manual interaction is impractical or dangerous.

Smart safety helmets can be equipped with sensors that detect sudden falls and accidents. These sensors can detect sudden changes in helmet orientation or movement that indicate a possible fall or accident. As soon as such an event is detected, the helmet can automatically activate an emergency alert system. When an emergency alert is activated, nearby miners and dispatch centers are immediately notified. This allows you to give immediate help to miners in need. Alarm systems can send distress signals to designated recipients using a variety of communication methods, including radio, cellular networks, and dedicated IoT networks.

Nearby miners can be alerted via their smart-her helmets and wearable devices, so they can react quickly and provide immediate assistance to a colleague who has fallen. At the same time, the control center can receive alerts and mobilize the appropriate emergency teams. The control center also has access to the miner's location data, allowing them to reach the scene of the accident quickly.

Integrating fall detection and emergency alert functionality into smart safety helmets will improve the overall safety of miners. Rapid response times and effective communication enable injured miners to receive timely assistance, reducing the severity of their injuries and potentially saving lives.

References

1. Jeevan Nagendra Kumar, Y., Spandana, V., Vaishnavi, V.S., Neha, K., Devi, V.G.R.R. Supervised machine learning Approach for crop yield prediction in agriculture sector (2020) Proceedings of the 5th International Conference on Communication and Electronics Systems, ICCES 2020, art. no. 09137868, pp. 736-741.
2. Prasanna Lakshmi, K., Reddy, C.R.K. A survey on different trends in Data Streams (2010) ICNIT 2010 - 2010 International Conference on Networking and Information Technology, art. no. 5508473, pp. 451-455.
3. Web of Things-Based Remote Monitoring System for Coal Mine Safety Using Wireless Sensor Network Cheng Bo, Cheng Xin, Zhai Zhongyi, Zhang Chengwen, Chen Junliang First Published August 31, 2014.
4. A.P. Squelch, “Virtual reality for mine safety training in South Africa,” Thes Journal of The South African Institute of Mining and Metallurgy, pp. 209-216, July 2001.
5. X.B. Jiang, ZigBee technology and its applications Low-voltage apparatus, 2005.

6. Z.J. Tian, Digital Mobile Voice Communication Encode and Voice Communication Designed [J]. China Coal, 2007.
7. H.M. Zhu and L. Zhang, The Design of Warp Tension Embedded Intelligent Control System Based on μC/OS and ARM [J]. Mechanical & Electrical Engineering Magazine, 2006.
8. X.M. Wang and N.A. Liu, 2.4GHz RF Chip CC2420 and Its Application in ZigBee Communication [J]. International Electronic Elements, 2005.
9. X. Zhang, X.J. Qiao and E. Liu, Design of High Precision Instrument for Measuring Temperature, Humidity & Dew Point [J]. Instrument Technique and Sensor, 2006.
10. L. Ma and H. Guo, Smart Sensor for Underground Coal Mine Based on ZigBee Protocol [J]. Instrument Technique and Sensor, 2007.
11. Hazarika, P. (2016, July). Implementation of smart safety helmet for coal mine workers. In 2016 IEEE 1st International Conference on Power Electronics, IntelligentControl and Energy Systems (ICPEICES) (pp. 1-3). IEEE.
12. Revindran, R., Vijayaraghavan, H., & Huang, M. Y. (2018, September). Smart helmets for safety in mining industry. In 2018 International Conference on Advances in Computing, Communications and Informatics (ICACCI) (pp. 217-221). IEEE.
13. Behr, C. J., Kumar, A., & Hancke, G. P. (2016, March). A smart helmet for air qualityand hazardous event detection for the mining industry. In 2016 IEEE International Conference on Industrial Technology (ICIT) (pp. 2026-2031). IEEE.
14. Mishra, A., Malhotra, S., & Singh, H. P. (2018, February). Real Time Monitoring &Analyzation Of Hazardous Parameters In Underground Coal Mines Using Intelligent Helmet System. In 2018 4th International Conference on Computational Intelligence & Communication Technology (CICT) (pp. 1- 5). IEEE.
15. Sankara Babu, B., Suneetha, A., Charles Babu, G., Jeevan Nagendra Kumar, Y., Karuna, G. Medical disease prediction using grey wolf optimization and auto encoder based recurrent neural network (2018) Periodicals of Engineering and Natural Sciences, 6 (1), pp. 229-240.
16. Nagaraja, A., Boregowda, U., Khatatneh, K., Vangipuram, R., Nuvvusetty, R., Sravan Kiran, V. Similarity Based Feature Transformation for Network Anomaly Detection (2020) IEEE Access, 8, art. no. 9006824, pp. 39184-39196.