Evaluation of battery performance for solar mobile phone charger for rural dweller usage

Moses E. Emetere[1,2] , *Akuwudike* E.C.[3], and *Sunday* A. Afolalu[2,4]

[1]Department of Physics, Bowen University, Iwo, Nigeria
[2]Department of Mechanical Engineering Science, University of Johannesburg, Johannesburg, South Africa
[3]Physics Department, Covenant University, Ota
[4]Department of Mechanical Engineering, Afe Babalola University Nigeria.

Abstract. This research is an initiative to improve the standard of living of rural dwellers and deprived settlements in a semi-urban location where epileptic power supply is predominant. The study is aimed at evaluating battery performance for the construction of a solar-powered mobile charger aimed at improving a steady power supply for electronic devices (phones, tablets, etc.), given the high and increased dependence on such devices in recent times. The solar-powered mobile charger was tested using various batteries available in the Nigerian market to determine the cheapest and most effective device to help rural dwellers. The constructed device was tested via its output voltage, current, time, and temperature. The results were subjected to further analysis by using Matlab and PVeducaction software for presentation and interpretation. The results of the analysis showed an efficiency value of seventy percent (70%) and a standard nominal voltage reading between 3.7 and 4.2 volts (V). The performance of the four batteries used affirmed its basic findings, however, Nickel-Metal Hydride (Ni-MH) batteries and Lithium-ion (Li-ion) metal (Ni-MH) batteries showed stability among the batterires used. The study recommends the commercialization phase of the construction to improve the living standards of rural dwellers and deprived settlements in a semi-urban location.

1 Introduction

In Nigeria, power generation began supplying 60 kilowatts in Lagos in 1886. Tin mines established a 2-MW plant on the River Kwali in 1923, a Private Company near Jos, which began a hydroelectric dam in Kura to support the mining industry, was set up six years later. Tin Miners was a founder of Kwali. Around 1886 and 1945, electricity production was minimal, with power supplied primarily to Lagos and other industrial centres such as the Jos and Enugu mining industries. The colonial government established an electricity agency in the Department of Public Works, which then built generating sets in several towns to service government reserve areas. In 1962, the Niger Dams Authority (NDA) was established as a regulatory agency to construct and coordinate dams along the River Niger and Kaduna Rivers, NDA built a 320MW hydropower plant at Kainji in 1969 with the power produced sold to ECN. NDA and ECN combined in 1972 to create the National Electrical Power

© The Authors, published by EDP Sciences. This is an open access article distributed under the terms of the Creative Commons Attribution License 4.0 (https://creativecommons.org/licenses/by/4.0/).

Authority (NEPA). It was Nigeria's largest energy company before developments in the power sector led to the formation of Nigeria's Power Holding Company and subsequent privatization of energy production and distribution (Mohammed et al., 2013).

Nigeria, as Africa's largest nation with a population of almost 200 million, faces problems of unreliable electricity. It is because less than 60 % of the population lacks access to affordable power, which is why the energy crisis of the nation needs to be prevented (Iwayemi, 1978; Oyewo et al., 2018). Since Nigeria's increasing growth, there has been a corresponding rise in the demand for electricity without stable electricity generation. Inadequate electricity supply in the country, particularly in rural settlements where there are insufficient grid systems required to explore renewable energy sources. Photovoltaic (PV) system (electronic system that directly transforms light energy into electricity through a photovoltaic effect) configuration provides an economical replacement for the expensive grid extensions in rural areas around the world. In addition to the rural settlement illumination, inexpensive, small-scale solar energy production can be used in mobile phone charging.

The development of technical expertise and solar capital brings solar power immense prominence as a source of sustainable energy. As for the alternative to the environmentally sustainable generation of electricity, it is efficient, uncontaminated, as well as energy source anywhere Sunlight is available, so there are several benefits over energy sources that are not renewable (Bosshard, 2006). The big bonus is that solar electricity burns out early in little time. Solar energy comes from solar panels that do not need any essential mechanical elements like wind turbines etc. These mechanical modules can be disintegrated and create repair issues so that no solar panels can cause complications, and no solar cells attached to the sun panel can survive for up to decades without replacement.

The production of solar energy is, however, deficient – only when Sunlight is available can energy be created, these solar panels are typically equipped with rechargeable batteries aid in storing excess energy produced during the time of availability and use this to supply energy to systems without Sunlight; majorly because the solar panel generates a DC voltage that typically exceeds the voltage required for reloading the cell phone and for supplying power (Chuang et al., 2014). The load (mobile phone) to be connected for this project needs only a DC input, so there is no need for DC-AC conversion; instead, a DC-DC conversion provides the device with the appropriate power from the solar panel generated.

Today, mobile phones are almost every country in the world's main method of wireless communication. More than 6.8 billion mobile phone subscribers around the world are recorded in the International Telecommunications Union survey, and the number is steadily increasing as the infrastructure advances, and manufacturing costs are decreased.

Distribution of resources in rural areas of developed countries aims to boost the people's quality of life. It increases efficiency, facilitates diversification of earnings, encourages employment, provides access to information, increases accessibility and improves communication. It also disincentives people to move to urban areas. According to the DHS tabulations, nearly 64% of the people living within remote areas, while 36 % of the population lives in city environments. Therefore, to encourage sustainable economic growth, these villages must be electrified. The key factor the nation cannot obtain 100% power is because of the transfer and sale of energy to these less densely populated areas away from generating stations. A decentralizable source of energy is therefore required to provide electricity to these hamlets. The best choice is to power on photovoltaic solar panels. By way of a photovoltaic effect, a solar photovoltaic device transforms light energy into direct current. The battery is used for the recovery of additional day and evening power. Solar photovoltaic systems produce direct electricity via the inverters and power-conditioning devices which supply system costs to the alternate current provided to load through a power distribution network. This network actually has greater development costs and competition for land than any other renewable energy generation program. But the operating and repair

costs are slightly lower and therefore higher than most. Also, new modules are available as the demand for electricity rises (Zhao et al., 2002).
This is of the utmost importance that rural people must charge telephones during daytime hours when Daylight is available without power so that they have to reduce the carbon emission rates. It is possible with a solar-powered mobile phone charger. In this case, the goal is to build a low-cost, efficient, solar-powered cell phone charger. The objectives of this research are to: design a solar energy charging power circuit; perform a specification estimate to assess the amount at which the rechargeable battery charges the cell phone; and execute a basic test to evaluate the input and output variations of the charger.

2 Phone Charging and discharging theories

A mobile battery charging device is a machine that will charge the battery of a cell phone with low power automatically. Cell phones are becoming an integral part of the lives of people and will require regular battery charging for long periods of usage (Olvitz et al., 2012). Battery chargers, driven, pulse-fast, USB-based, inductive Solar Chargers and moving controlled chargers are available as timer, intelligent and universal battery Charger analyzers. The devices include a mobile phone charger, vehicle battery charger, electric battery charger and charging stations also vary. The loading methods shall be split into two categories: fast loading method and slow loading. Quick charging is a method used to charge a battery in two or fewer hours, and slow charging is a night-time battery charging instrument (Wallies and Balekundri, 2014). A slow charge is helpful because there is no need for a charging chain. But it is inexpensive, too. The only downside to this charging device is the delayed charging time.
A battery's capacity is its ability to supply power at the required voltage. The increasing the electrical content of the cell, the more strength it has. A cell is smaller than a larger cell but is produced by the same chemical mechanism as the open-circuit voltage. Different criteria are the chemical nature of the battery, the rate of delivering the battery charging (current), the appropriate terminal voltage, storage time, environmental tempers, etc. are determined in the amount that a battery generates (Bosshard, 2006). Increase in the discharge rate reduces the capacitance. The relationship Peukert's law mathematically explains the relationship between current, discharge time, and capacity of a lead-acid battery (over a typical range of current values):

$$t = \frac{Q_P}{I^K}$$

Where,

Q_P is the capacity when discharged at a rate of 1 amp.
I am the current drawn from battery (A).
t is the amount of time (in hours) that a battery can sustain.
K is a constant around 1.3.

After a long period, the battery has been primed to a smaller fraction of its capacity lacks energy because of lateral reactions, usually lasting and consuming charge carriers without electric power production. This state is called self-disposal internally. Additional side reactions may also arise as the batteries are filled, which reduces the potential for more discharges (Slater et al., 2013). Essentially, after sufficiently recharges all electricity is lost, and the battery no longer produces power. External energy fluctuations with ion-rate limits slip through the electrolyte, which contributes to specific battery outputs. The low-rate

download delivers more storage capacity within a fixed level than the high-rate download. The addition of batteries with variations in A·h values (although they may affect service times) does not impact device activity for a particular voltage unless charging passes its limits

3 Methodology

Materials used for the project includes solar Panel, USB power circuit charger, rechargeable batteries, circuit board, jumper wires, soldering iron, soldering lead, power supply (9V, DC), switch, arduino uno, voltage sensor, current sensor, DS3231 RTC timer module sensor, DHT11 temperature sensor, and SD card module. The block diagram of solar phone charger is presented in Fig. 1. The electrical energies was regulated by voltage charger circuitry to produce a 5V output at the output USB needed to charge most phones. The arduino uno was used to calculate and process the Li-on batteries output voltages and display the voltage value on the LCD - letting the user see the voltage state of the batteries. A 9V DC battery powers the voltmeter section. The functionality of the system was programmed using arduino uno microcontroller, compiler, and editor (Wallies et al., 2014). The prototype development of solar mobile phone charger requires the integration of its hardware and software. As soon as the device is turned on, it starts taking readings (data). The acquired data is then logged directly into the SD-Card Module and then sent to the SD-Card for storage. Four types of batteries were used i.e., Nickel-Cadmium (Ni-Cd) batteries, Nickel-Metal Hydride (Ni-MH) batteries, Lithium-ion (Li-ion) metal (Ni-MH) batteries and Lithium-ion Polymer (Li-Po) (Ni-MH) batteries.

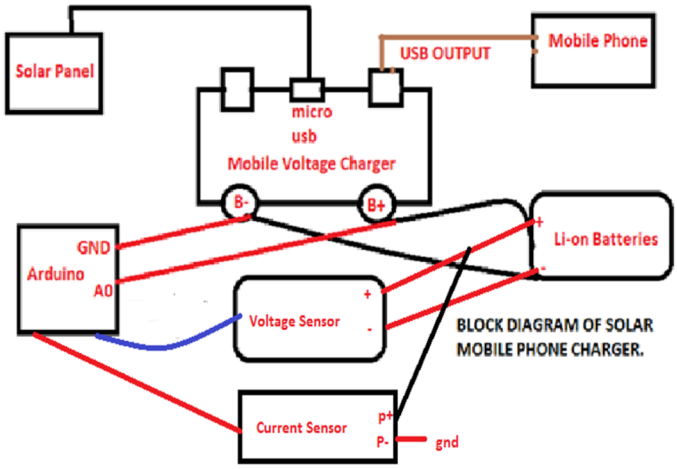

Fig. 1: Block Diagram of Solar Phone Charger (Circuitio, 2018)

The key aim of this project is to power a battery using solar panels. The project deals with a charging control system that also carries out battery overload, deep discharge and under-voltage protection. This system uses photovoltaic cells to transform solar energy into electrical energy. The essential methods and overall procedures for this project are shown in Fig. 2. The system was tested in three stages. In the first stage, the hardware was examined to evaluate its performance. The second phase was testing the accuracy of the coding. The third phase is the environment field test, and the environment test was done in two steps firstly, putting the solar panel in direct sunlight and secondly, in partial sunlight.

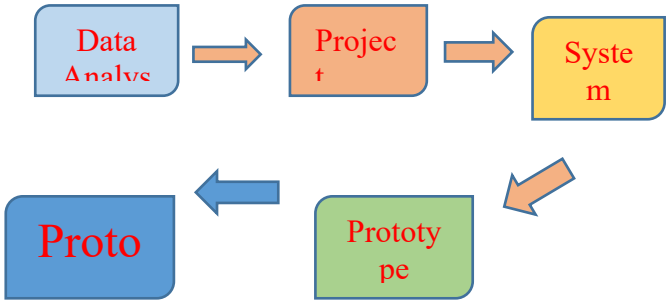

Fig. 2: Research methodology chart

The final construction of the device is presented below in Fig. 3.

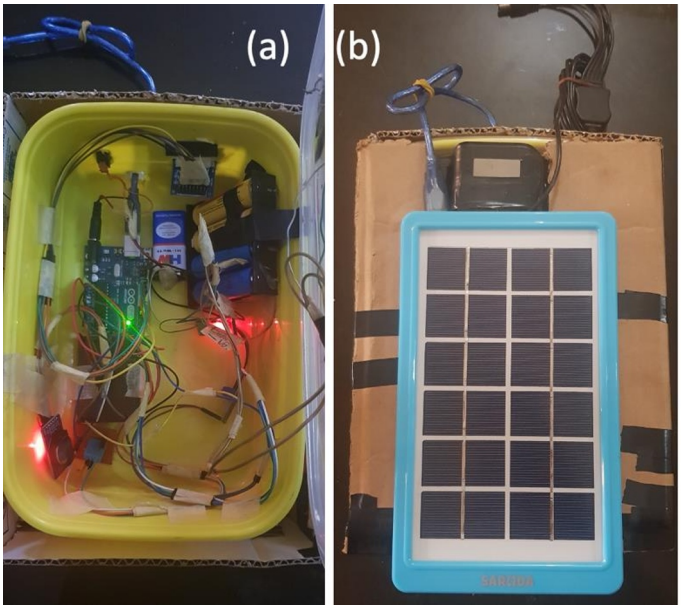

Fig. 3: (a) Image showing inside solar mobile phone charger casing (b) solar mobile phone charger placed under sunlight

The solar charger was checked in two ways. The first was to position the solar charger in a shaded yet accessible field. The solar panel of the battery is not struck explicitly by sunlight. The second option was to place the solar charger without shade in an open area. Sunlight immediately hits the charger's solar plate. The two methods were conducted in two hours in a parallel way. By 10 a.m. precisely the first series of calculations was carried out, and after two hours by midday, the second set was made. The cycle was replicated before the fourth collection, 4 pm, was hit. During this time, the output current and voltage were calculated. The current flows into the battery terminal, and the solar panel voltage is 160mA. The effect is 2hrs 40min to measure period. The completely powered battery requires nearly two (2) hours.

4 Results and Discussion

The input current was 160mA, and its reference voltage was 6 volts. The solar charger's output current under ambient light is less than the solar charger's current under direct sunlight. The solar charger under direct sunlight has a wide current flow under indirect light, with average 160mAh, then the solar charger of just 140 mA on average. The primary solar voltage is also higher than the indirect solar voltage. Charge and discharge values for batteries are sometimes addressed with a "C" current number. The C rate theoretically charges the battery or discharges it in an hour. The relationship between lead-acid cells is established in the laws of Peukerts, which still has good potential if it is reduced to a low rate for a lead-acid cell that does not support the usable terminal voltage at high power. Rechargeable cell datasheets display the discharge capacity for a certain period; in-hour cells are rated at 15-minute discharge for cells with continuous supply systems (Leadbetter and Swan, 2012). Even until a weak cell is completely produced, cell reversals may occur. If the battery drain current is strong, the internal resistance of the cell may induce a voltage drop greater than the forward voltage of the circuit. This causes the cell polarity to revert as the current flows. If a battery with having cells is completely discharged, the cell reversal effect described above also causes damage. However, a battery can be fully unloaded without causing the cell to reverse, either through the separate unloading of each cell or by allowing the internal cell leak to delete its charge over time.
The first type of battery used was the Nickel-Cadmium (Ni-Cd) batteries. The readings were taken for about an hour (when there no load, when there was load, and when measured with operating voltage), and the graph was plotted with voltage in volts (V) against time in seconds (S) as presented in Fig. 4a. Nickel-Cadmium (Ni-Cd) batteries produce a nominal voltage of 1.4V which is higher than the nominal voltage of the Nickel-Cadmium (Ni-Cd) batteries, using PVeducation.org software the power density of the Nickel-Cadmium batteries was calculated resulting 100Wh/kg, it produces a fairly high power density. The second type of battery used was the Nickel-Metal Hydride (Ni-MH) batteries. The readings were taken for about an hour (when there no load, when there was load, and when measured with operating voltage), and the graph was plotted with voltage in volts (V) against time in seconds (S) in Fig. 4b. The Nickel-Cadmium (Ni-Cd) batteries have a nominal voltage of 1.2V, but the connection was made in a set of three to produce a voltage of 3.6V, using PVeducation.org software the power density of the Nickel-Cadmium (Ni-Cd) batteries was calculated resulting 60Wh/kg, it provides a very low power density. From the analysis, it is observed that the Nickel-Cadmium (Ni-Cd) batteries have an average lifespan and operation at low temperature with average capacity, Nickel-Cadmium (Ni-Cd) batteries deliver full capacity at a high discharge rate, Nickel-Cadmium (Ni-Cd) batteries should be charged, regularly for it to be effective and also to avoid crystal growths on the batteries. When a load is not applied, Nickel-Cadmium (Ni-Cd) batteries self-discharge at approximately 20% per month at high temperatures. The third type of battery used was Lithium-ion (Li-ion) metal batteries The readings were taken for about an hour (when there no load, when there was load, and when measured with operating voltage), and the graph was plotted with voltage in volts (V) against time in seconds (S) as presented in Fig. 4c. The Lithium-ion (Li-ion) batteries are made of lithium metal, also currently the major set of rechargeable batteries commonly used, the Lithium-ion metal (Li-ion) batteries have a nominal voltage of 3.7V, using the PVeducation.org software the power density of Lithium-ion metal (Li-ion) batteries was calculated resulting 126Wh/kg, it produces a high-power density. From the analysis, it is observed that the Lithium-ion Metal (Li-ion) batteries have a great power density and a high cell voltage; however, Lithium-ion Metal (Li-ion) batteries do not have an efficient battery safety circuit, and they are bit costly. When a load is not applied, Lithium-ion Metal (Li-ion) self-discharge at approximately 5% per month at high temperature. The fourth type of battery

used was Lithium-ion Polymer (Li-Po) batteries The readings were taken for about an hour (when there no load, when there was load, and when measured with operating voltage), and the graph was plotted with voltage in volts (V) against time in seconds (S) as presented in Fig. 4d. Lithium-ion Polymer (Li-Po) batteries have a nominal voltage of 3.7V, and using the PVeducation.org software the power density of the Lithium-ion Polymer (Li-Po) was calculated resulting in 185Wh/kg, it produces a very high power density. From the analysis, it is observed that the Lithium-ion Polymer (Li-Po) batteries have an immensely great power density and a very high nominal voltage compared to Nickel-Cadmium (Ni-Cd) and Nickel-Metal Hydride batteries, Lithium-ion Polymer (Li-Po) batteries also have more efficient battery safety circuit compared to Lithium-ion Metal (Li-ion) batteries. Lithium-ion Polymer (Li-Po) batteries can also be affected by overcharging; it can result in the electrolyte leaking. When a load is not applied, Lithium-ion Polymer (Li-Po) batteries self-discharge at approximately 3% per month at high temperature. The Lithium-ion Polymer (Li-Po) batteries have a better efficiency rate compared to Lithium-ion Metal (Li-ion) batteries, Nickel-Metal Hydride (Ni-MH) batteries and Nickel-Cadmium (Ni-Cd) batteries, respectively.

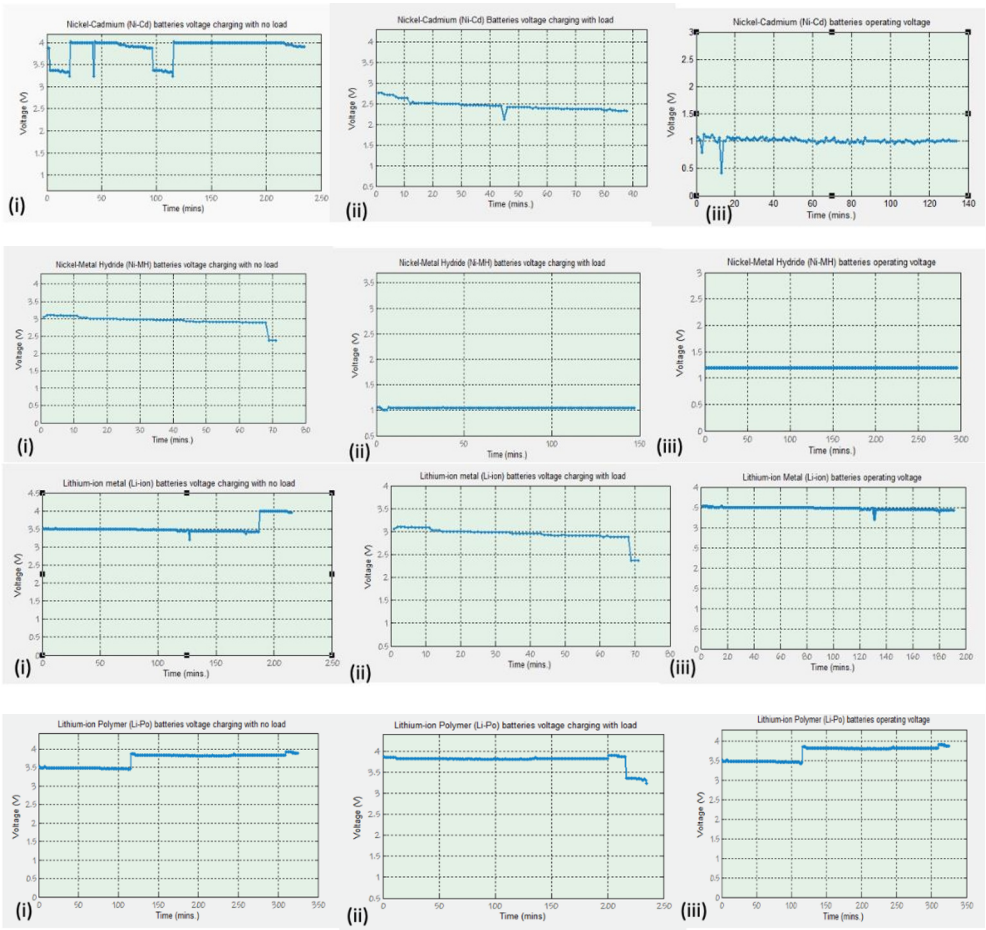

Fig. 4: (a) For Nickel-Cadmium (Ni-Cd) batteries (i) voltage measure with no load (ii) voltage measure with load (iii) operating voltage; (b) For Nickel-Metal Hydride (Ni-MH) batteries (i) voltage measure with no load (ii) voltage measure with load (iii) operating voltage; (c) For Lithium-ion (Li-ion) metal (Ni-MH) batteries (i) voltage measure with no load (ii) voltage measure with load (iii) operating

voltage; (d) For Lithium-ion Polymer (Li-Po) (Ni-MH) batteries (i) voltage measure with no load (ii) voltage measure with load (iii) operating voltage.

The following safety precautions were adhered to in the course of the implementation of the project: during soldering, excessive heat was avoided on the components to prevent them from getting damaged; the LED was powered through a resistor to limit the flow of electrons to avoid damage; and the correct polarities of the components were connected correctly.

5 Conclusion

This research focuses on designing and constructing a cell phone charger with solar power. With the aid of a controlling circuit, this circuit guarantees a continuous power supply to the load (phone). The circuit supply solar panel gives a combined output voltage of 6.54V without charging and 6V undercharging condition. At the charge level, the voltage varies between 3.5V and 4.2V and the current at average is around 160mA. The Solar panel on the battery charger requires low maintenance. The solar cells panel is extremely reliable as it lasts longer than other sources of energy. The performance of the four batteries used affirmed its basic findings, however, Nickel-Metal Hydride (Ni-MH) batteries and Lithium-ion (Li-ion) metal (Ni-MH) batteries showed stability among the batterires used. The tests indicate an efficiency value of 70 per cent in the design and construction of the Solar Phone Charger. Yet the solar charger's output did not suit into the range under indirect Sun illumination, i.e. the more the availability of solar light, the more energy is produced.

References

1. Bosshard, P. (2006). An Assessment of Solar Energy Conservation Technologies and Research Opportunities, publication 1123(131), 34-39.
2. Chuang, Y. C., Chuang, H. S., Liao, Y. H., Yang, C. H., & Wang, Y. S. (2014). A novel battery charger circuit with an improved parallel-loaded resonant converter for rechargeable batteries in mobile power applications. In 2014 IEEE 23rd International Symposium on Industrial Electronics (ISIE) (pp. 353-359). IEEE.
3. Circuitio, (2018). Circuit diagram of a solar phone charger. (Accessed May, 2020)
4. Iwayemi, A. (1978). An investment planning model for the electricity sector in Nigeria. Socio-Economic Planning Sciences, 12(5), 285-292.
5. Leadbetter, J., & Swan, L. G. (2012). Selection of battery technology to support grid-integrated renewable electricity. Journal of Power Sources, 216, 376-386.
6. Mohammed, Y. S., Mustafa, M. W. N., Bashir, N., & Mokhtar, A. S. (2013). Renewable energy resources for distributed power generation in Nigeria: a review of the potential. Renewable and Sustainable Energy Reviews, 22, 257-268.
7. Olvitz, L., Vinko, D., & Švedek, T. (2012). Wireless power transfer for mobile phone charging device. In 2012 Proceedings of the 35th International Convention MIPRO 12 (pp. 141-145). IEEE.
8. Oyewo, A. S., Aghahosseini, A., Bogdanov, D., & Breyer, C. (2018). Pathways to a fully sustainable electricity supply for Nigeria in the mid-term future. Energy Conversion and Management, 178, 44-64.
9. Slater, M. D., Kim, D., Lee, E., & Johnson, C. S. (2013). Sodium-ion batteries. Advanced Functional Materials, 23(8), 947-958.

10. Wallies Thounaojam, V., & Balekundri, A. (2014). Design and development of a microcontroller-based solar charge controller. International Journal of Emerging Technology and Advanced Engineering, 4, 510-513.
11. Zhao, M., Panda, R. V., Sapatnekar, S. S., & Blaauw, D. (2002). Hierarchical analysis of power distribution networks Transactions on Computer-Aided Design of Integrated Circuits and Systems, 21(2), 159-168.