Increasing by electrophysical methods of fruit and vegetable juice production

J. M. Kurbonov[1*], *Sh. J.* Yusupov[2], and *Y. N.* Mahmadiyarova[1]

[1]Samarkand Institute of Economics and Service, 9, Temura Street, Samarkand, 140100, Uzbekistan
[2]National Research University TIIAME, 39, Kori Niyoziy Street, Tashkent, 100000, Uzbekistan

Abstract. The article represents the results of research on the increase of fruits and vegetables juice yield by electrophysical methods are presented. Apples from fruits, apricots, plums and carrots from vegetables, Suggestions and recommendations have been made for the extraction of juice in an electroplasmolizer with a combined two-electrode VHF, in all cases to obtain more juice than unprocessed. In the study, the process of electroplasmolysis, the specific electrical conductivity, the effect of temperature on the processing time and the methodology for determining the dielectric constant of processed products and the equipment used are presented. In particular, in the measurement of specific conductivity, a rectangular dielectric working chamber, plate electrodes, laboratory autotransformer connected to them - LATR-1M, laboratory single-phase thyristor power supply (220 V, 50 Gts), sound generator GZ-33, high-frequency machine generator 93 GIM1, from the dielectric slave electric pole and conductors connected to the resistor bridge, the voltage applied to the electrodes during the experiment D-5055 voltmeter, the working current D-5017 ammeter,It also presents the relevance and relevance of the topic, keywords, calculation methods in the experimental process, and the results and discussion of electrical and dielectric conductivity of whole and cut varieties of fruits (apricots, apples, plums) and vegetables (carrots, beets) of different sizes.

1 Introduction

Today, fruit and vegetable production is growing rapidly around the world. China, India and the United States are leading the way. Over the past 10 years, exports of fruits and vegetables have increased 10 times, and exports in value terms have increased 12 times. For this reason, scientific research is being developed in the field of processing all fruits and vegetables and obtaining semi-finished and finished food products from them [1-9].

At present, Uzbekistan with its high agricultural potential has a potential of 15 million tons per year. tons of agricultural products. The volume of fruit and vegetable products produced in our country not only meets the needs of the population of the republic, but also exports high quality products to foreign markets. Over the past 5 years, the volume of fruit and vegetable production increased by 1.7 times and in 2019 amounted to 12.3 million tons.

* Corresponding author: kjamshed@rambler.ru

Of this, 1.7 million tons or 14% of the product was processed. To date, 11.3% of vegetables, 18.2% of fruits and 24.4% of grapes are processed. Processed fruits and vegetables add value to the product and allow for higher returns [10-15].

In 2019, the gross harvest amounted to 1780.8 thousand tons, of which about 490.3 thousand tons were processed. Currently, the use of electrophysical methods in food production is increasing day by day. From electrophysical methods we can specify high-frequency, high-frequency electric field energy, red light energy, electrodialysis, electroflotation, plasmolysis, electrostriction and others [15-20].

Today, fruits and vegetables rich in natural vitamins, micro and macronutrients in the daily diet of man around the world, including fruits and vegetables and theiragainProduction of processed products using modern technologies, including maximum preservation of natural components, as well as improving the quality of products, increasing their nutritional safety and biological value, development and implementation of technology for obtaining quality fruit and vegetable juices and concentrates, rational complex from local raw materials Research is being carried out in topical areas such as obtaining high quality products, ensuring the competitiveness of the product, reducing the cost and cost of the product [20-22].

In doing so, the chosen topic is relevant for the use of promising electrophysical methods in the processing of fruits and vegetables, including the extraction of juice from them: electrodialysis, UMC EMM energy, electroflotation, electroplasmolysis, electrostriction.

Electroplasmolysis, which is designed to accelerate the process of juice production by pressing from the raw material of plants (fruits and vegetables) from electrocontact processing processes, can be included. Therefore, to date, a large amount of work has been devoted to the study and development of this process. Such extensive research was carried out after the formation of the basic rules of plasmolytic juicing theory, the essence of which is that the juicing of plant raw materials depends on the initial level of permeability of the protoplasmic shell and its ability to resist external influences during pressing. Therefore, any effects aimed at damaging the protoplasm and increasing its permeability will eventually lead to an increase in juice output.

It is known that the amount of juice in fruits and vegetables reaches 90-95%, but when they are processed under production conditions, the juice yield is often only 50-60%.

There are many ways to damage the shells of fruits and vegetables, including mechanical, thermal, enzymatic, radiation, etc., but electrical methods have a number of advantages over others, and first of all they are simple and minimal. characterized by processing time.

The results of experiments showed that by processing plant raw materials with 220 V AC at industrial frequency, their protoplasm is broken down almost immediately, their permeability increases and increases the yield of juice during subsequent pressing. Of course, this process can be carried out by electrolysis, but unlike thermoplasmolysis, due to the breakdown of cell walls, pectin is added to its juice, which easily delays the release of juice by the remaining cell walls and large particles (plasma) springs, which can lead to a deterioration in the quality of the juice.

The efficiency of juice extraction by electroplasmolysis depends on a number of factors, including: EMM voltage gradient, process temperature, duration of exposure, and electrophysical properties of the raw material. It should also be noted that the effect of electroplasmolysis on plant cells does not depend on the frequency of the electric current.

During electroplasmolysis, the electrical conductivity of plant tissue increases as the discreteness of the electrical properties of the cell becomes more pronounced as the cell is disrupted. During electroplasmolysis, the magnitude of the current is required to be very high, as the maximum current can lead to complete damage to the protoplasmic shells.

To date, to obtain juice from fruits and vegetables using the electroplasmolysis process, a variety of electroplasmolizers have been developed by researchers: drum, single-tier chamber, multi-tier chamber, transport, cell, multi-electrode, auger, centrifugal, linear, pulse and other designs. The first two-electrode (roller) electroplasmolyzer with a drum was developed in 1948 by B.L. Flaumenbaum, whose structural and electrification scheme is shown in Fig.1.

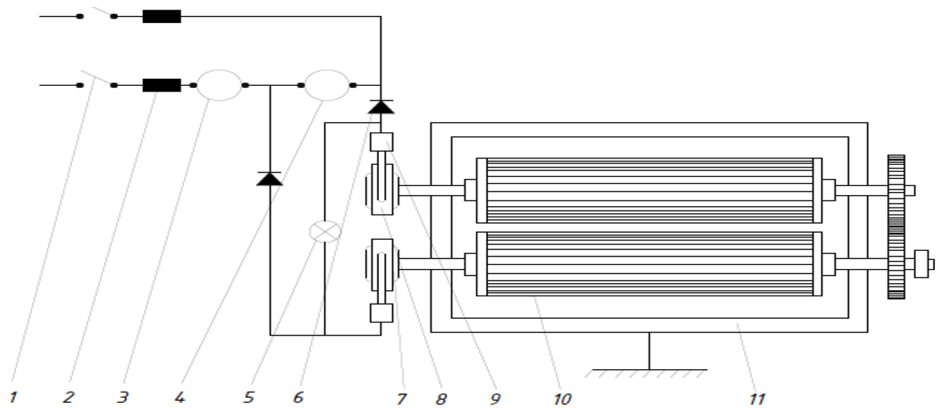

1. A polyus rubilnik; 2.Predoxanitel (40A); 3. Ammeter; 4. Voltmeter; 5.Control lamp; 6. Blocking contact; 7. Textile bushing; 8.Collector ring 9. Holder; 10. Val-electrode; 11. Grounding stand.

Fig. 1. Two-electrode electroplasmolizer AC circuit.

Electroplasmolyzer for electric processing of fruits and vegetables, consisting of two drums parallel to each other, they are mounted frame, guard, control panel and electrical circuit, the rollers are made of stainless metal, the frame is made of dielectric material. Each of the rollers is connected to an alternating current system via a collector ring.

During the operation of the device, the processed raw material is passed between the continuous rollers under the influence of electric current for a short time (2-3s). The spacing of the rollers is 1-3 mm, 4-5mm if the fruit is seeded or grainy. If the surface of the rollers is riffed according to the purpose, it is considered good to hold the material. Also, to increase the surface of the rollers, their diameter can be 250-300 mm. The device operates on alternating current 220 V, 50-75 A, 50 Gts. From the jmyxi or pulp of various fruits from which the crushed, first preslab juice was obtained, an average of 12-14% of the juice was obtained in addition to the previously obtained juice.

Concluding from the above, it can be noted that the application of electrophysical methods in the processing of fruit crops. including the development of electroplasmolysis method is promising.

The aim of our work is to use electrophysical methods in the technology of obtaining juices from fruits and vegetables,theirincrease juice yield.

2 Analysis and results

The technological scheme of the experimental device of the combined two-electrode electromagnetic field (EMF) high-frequency (UHF) electroplasmolyzer is shown in Fig. 2.

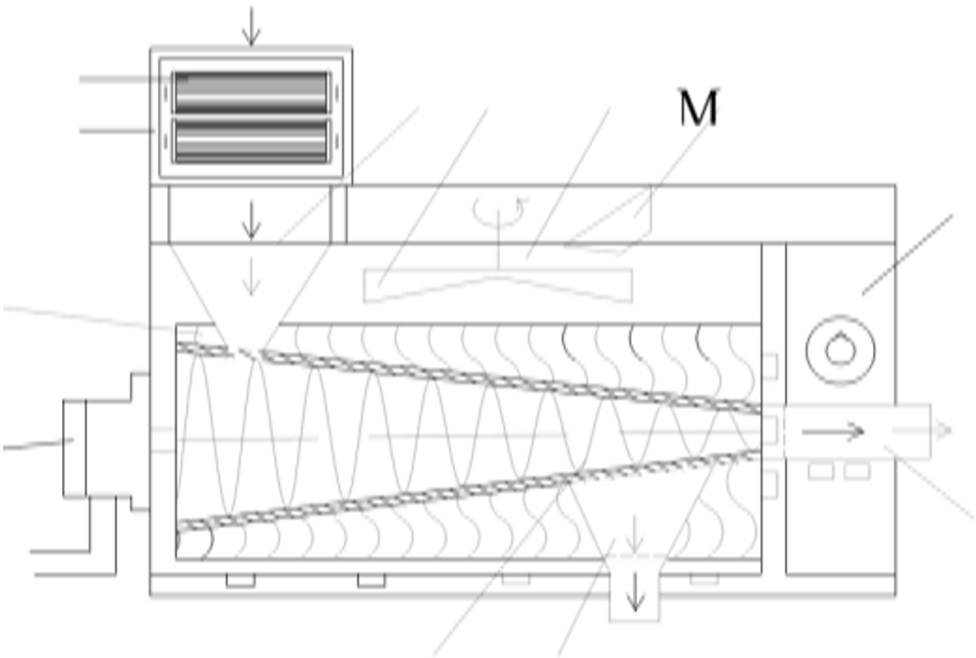

1.Val-electrode; 2. Electrode plasmolyzer housing; 3. Product delivery hatch; 4. Product transfer funnel; 5. VHF oven dissector; 6. Slot Working Camera; 7.M-magnetron; 8. Control panel; 9. Jimix extract of juice; 10. Juice outflow; 11. Dielectric juicer; 12. Dielectric shneyk; 13. Electric motor.14. VHF EMF oven.

Fig. 2. Technological scheme of the experimental device of electroplasmolyzer with combined two-electrode VHF.

Experimental device: a two-electrode electroplasmolyzer (with an alternating current wiring diagram. Fig 1.) Combined with an electroplasmolyzer VHF, which forms a general research stand.

The circuit diagram of the two-electrode electroplasmolizer AC, which is the first part of the research device, and its structure, the principle of operation are shown in Figure 1.

The second part of the device is based on a high-frequency (HF) furnace with a resonator. The magnetron and the fox transmitter are located at the top of the furnace and a rotating dissector is used to transmit the fox emitted from it evenly across the chamber. Inside the furnace, the inlet is made of a dielectric - a fluoroplastic juicer made of fluoroplastic. The juice extractor consists of a truncated cone-shaped tube with a truncated cone inside. An electric motor is installed outside the furnace to rotate the shaft (the speed of rotation of the output shaft is 50-60 rpm). All parts of the juicer inside the oven are made of non-metallic material. At the end of the juicer, the juice is separated from the net at the bottom of the bottle, and the juice is squeezed from the top. On top of the furnace will be installed electroplasmalizer in the scheme shown in the figure. To ensure its electrical safety, the carcass and cover must be made of dielectric material. Thus, we have a combined two-electrode and a high-frequency juice extractor.

The device is used as follows. Before loading the raw material into the device, its electrical safety is checked and it is connected to the general electrical network (220 V.50 Gts). We can tell the formation of an electric current in eletroplamolysis by the ignition of its signal bulbs. The juicer inside the high-frequency oven is also switched on, and at the end the high-frequency oven itself is used, ensuring that there is no electrical hazard or unpleasant noise and so on. Therefore, the door of the electroplasmalizer on the furnace is

opened and the raw material is loaded into it in series. Scattered over it, the squeezed springs pass through an 8 mm perforated metal mesh at the top of the oven and into the juicer inside the oven. Once a certain amount of juice has been produced, the device is disconnected from the power supply and cleaned. Of course, the device must have a rubber mat under the worker's feet. as well as all metal parts of the device must be grounded.

From fruits: apples, apricots, plums and vegetables to carrots, The results of experiments performed on an experimental device with a combined two-electrode cell electroplasmolysis are given in Table 1. In order to determine how much juice was squeezed out of fruits and vegetables from the electrode and VHF processing, first the juice was passed between two electrodes, ie without electricity (unprocessed, without electrical processing). Then two-electrode juice squeeze 3, 5. sec. over time, the amount of juice in the juice was measured under the influence of an electric current (220 V, 50 Gts AC). Then, under the influence of two-electrode current and VHF EMF (power supplied to the resonator 0.4 kW) for 20, 30 sec, the amount of juice was determined and the total amount of juice could be obtained by the proposed method.

Table 1. From fruits and vegetables, kjuice extraction in an electroplasmolyzer with a combined two-electrode VHF.

Raw materials	Electrode processing time. sec.	Output of juice.%	VHF processing time sec.	The outflow of juice. %.	Total juice output. %.
Apple	Not processed	62.4	0	0	62.4
	3.0	68.7	0	0	68.7
	5.0	73.8	20	2.2	76.0
		75.0	30	3.6	78.6
Apricot	Not processed	70.1	0	0	70.1
	3.0	78.6	0	0	78.6
	5.0	79.2	20	2.3	81.5
	0	80.3	30	2.9	83.2
Plum	Not processed	47.0	0	0	47.0
	3.0	59.6	0	0	59.6
	5.0	64.0	20	3.2	67.2
		66.1	30	3.8	69.9
Carrot(red)	Not processed	53.7	0	0	53.7
	3.0	57.3	0	0	57.3
	5.0	65.4	20	2.7	68.1
		68.1	30	3.2	71.3
Beets	Not processed	43.1	0	0	43.1
	3.0	47.4	0	0	47.4
	5.0	55.4	20	2.7	58.1
		57.2	30	2.9	60.1

Fruits (apples, apricots and plums) and carrots from vegetables, kAnalysis of the results of juice extraction in an electroplasmolyzer with a combined two-electrode VHF showed that in all cases, more juice was obtained from the unprocessed. The increase in juice depends on the type of fruit and vegetable, navigation, condition, and the time it takes to pass through the two electrodes and the duration of VHF EMF light heating. For example, when extracting apple juice, place the crushed apple pulp between the electrodes for 3, 5 sec. 8.2-9.4% of the juice was extracted compared to the unprocessed juice. Also, in the UYUC EMF for 20.30 sec. In total, the average yield of juice from apples is 11.7%, from seeds - 7.85%, from plums - 16.75; 14.6% of carrots and 13.8% of beets are unprocessed.

The invigorating effect of electric current on living tissues is known from biology. The action of an electric current on the plant tissue leads to the movement of ions. Their free movement in the tissue (cell) is inhibited by their semiconducting protoplasm. As a result, high concentrations of oxylate ions accumulate in the protoplasm and coagulate, resulting in turgor due to plasmolysis in the cell, resulting in damage to its walls and easy excretion of juices in the cell. In addition, under the influence of EMC, its temperature rises to 70-80 0 C, which accelerates the process of plasmolysis and further increases the juice output. In

both cases, the permeability of the cells increases as a result of rapid damage to the protoplasmic membrane, and the outflow of juice as a result of pressure increases significantly.

Repeated processing of fruits and vegetables in an electroplasmolizer does not significantly affect the quality of the juice obtained from it. The average chemical composition of the identified fruits and vegetables (Table 2) is confirmed by a comparative analysis with the natural chemical composition [23].

Table 2. The average chemical composition of fruits and vegetables.

Fruit vegetable name	Sugar	Proteins	Cellulose	Acids	K	Ca	P	B_1	B_2	C
Apple	14,3	0,3	1,0	0,46	278	16	11	0,03	0,02	19
Apricot	17,8	0,9	0,5	0,7	363	20	34	0,04	0,06	9
Plum	11,4	0,3	0,7	0,6	213	19	19	0,6	0,4	9
Carrot(red)	3,5	1,4	1,1	0,2	200	51	55	0,06	0,07	5
Beets	6,2	1,6	0,9	0,43	288	36	41	0,02	0,04	9

Note: chemical composition%, minerals and vitamins - mg / 100 g.

3 Conclusion

Fruits (apples, apricots and plums) and carrots from vegetables in the case of juice extraction in an electroplasmolyzer with a combined two-electrode, in all cases, more juice is obtained from the unprocessed. The increase in juice depends on the type of fruit and vegetable, navigation, condition and the time of passage of the two electrodes and the duration of light heating of the EMF: the distance between the electrodes of crushed apple pulp in apple juice is 3, 5 sec. 8.2-9.4% of the juice is extracted from the unprocessed juice. Also, when heated for 20.30 seconds and pressed with a sieve in the VHF EMF, an additional 2.2 - 3.6% of the juice is released. In total, the average yield of juice from apples is 11.7%, from seeds - 7.85%, from plums - 16.75; 14.6% of carrots and 13.8% of beets are unprocessed

To increase the efficiency of the electroplasmolizer, we recommend the practical use of an additional juicer.

References

1. Zh. M. Kurbanov, U. R. Khodzhaeva, Electrophysical methods of influencing food service enterprises, monograph, “Iqtisod-moliya”, Tashkent (2012)
2. I. V. Kupadze, The study of fruit juices in order to establish indicators characterizing their naturalness. Auth. Diss. Can.tech.sci. Tbilisi (1990)
3. A. K. Reshetnikova, V. V. Kotov, Properties of ion-exchange membranes in the electrodialysis treatment of fruit juices. Membr. - sorbts. processes of separation of substances and their application in nar.x-ve: Proceedings of reports. 4 All. Conf., Batumi, 19-21 October 1988. Cherkasy, pp. 68-69 (1988)
4. V. V. Bordian, Intensification of drying of vegetable raw materials by electroplasmolysis. Abstract of can.diss (Institute of Applied Physics, Moldova, 1991)
5. V. N. Goloubev, SalemBenamara. Electrodialysis of orange juice. Ind. Alim. et. Agr. **106(3)**, 175-177 (1989)
6. I. A. Rogov, A. V. Gorbatov, Physical methods of food processing. Moscow, Food industry, pp. 372 - 384 (1974)
7. B. M. Matov, Flotation in the food industry. Moscow, Food industry, pp. 52-72 (1986)

8. B. M. Matov, B. I .Lazarenko, Size distribution of hydrogen bubbles seen during electrolysis on a wire cathode. Electronic Processing of Materials **3**, 44 -51 (1980)
9. B. N. Nazirov, S. B. Makhmudov, Electroplasmolysis of plant materials using bipolar pulses https://scienceforum.ru/2017/article/2017033155 ixth international student scientific conference student scientific forum (2017)
10. V. M. Zhilkin, A. N. Gribkov, Yu. L. Muromtsev, Evaluation of the effectiveness of the process of preparing plant materials for dehydration. Bulletin of TSTU, pp. 410–415 (2009)
11. I. S. Gulyi, N. I. Lebovka, V. V. Mank et al., Scientific and practical principles of electrical processing of food products and materials. Kiev, NUUPT, pp. 1–68 (2009)
12. N. Popova, N. Botoşanu, A. Papcenco et al., Proprietăţile optice a sucului de portocale primit din materia primă electroplasmolizată. Materialele conferinţei naţionale de termotehnică cu participare internaţională, ediţia a IX-a, Craiova, 27–30 May 1999, pp. 203–208 (1999)
13. N. Popova, A. Papcenco, The Effects of Electrical Pulses to the Structure of Cells Plant Materials. Abstracts 2nd International Conference on Nanotechnologies and Biomedical Engineering. Chisinau, Moldova, Chișinău, 18-20 April
14. Biryukova, Determination of the degree of damage to the tissues of grape pulp. “Izvestiya Vuzov USSR. Food Technology **2**, 162 – 165 (1971)
15. G. I. Gasyuk, B. M. Matov, Treatment of grapes with an electric current of increased frequency before pressing. Canning and Vegetable Drying Industry **1**, 9-11 (1960)
16. B. R. Lazarenko, E. V. Reshetko, Electronic Processing of Materials **5**, 85-88 (1968)
17. B. L. Flaumenbaum, Proceedings of OTIKP **111**, 15-20 (1949)
18. B. L. Flaumenbaum, M. Yu. Kazanjiy, Izvestiya Vuzov SSSR. Food Technology **5**, 76-78 (1966)
19. Jabel - Al Saadi. Quality of citrus juices obtained by electroplasmolysis. – On Sat. “New physical methods of food processing”. Moscow, pp. 28-29 (1967)
20. Yu. A. Shcheglov, M. I. Zelenskaya et al., Electroplasmolysis of plant tissue. - "Electronic Processing of Materials" **2**, 87-95 (1967)
21. N. D. Devyatkov, Influence of electromagnetic radiation of millimeter wave range on biological objects. UNF **110(3)**, 56-61 (1973)
22. B. L. Flaumenbaum, S. S. Tanchev, M. A. Grishin, Fundamentals of food preservation. Agropromizdat. Moscow (1986)
23. R. Normahmatov et al., Branding. Textbook. Tashkent, "Labor", pp. 28 - 32 (2004)