Robot for selective application of fungicides to control potato diseases

Sanat Seitov[1*], *Marina* Li[2], *Khusnobod* Khushvaktova[3], and *Khosiyat* Khujamkulova[4]

[1]Eurasian Center for Food Security, Lomonosov Moscow State University, 119991 Moscow, Russian Federation
[2]Tashkent State University of Economics, 100066 Tashkent, Uzbekistan
[3]Natural Sciences Department, Uzbekistan State World Language University, Kichik khalka yoli, 100173 Tashkent, Uzbekistan
[4]"TIIAME" National research university, 100000 Tashkent, Uzbekistan

Abstract. The world continues to actively develop robots for agriculture. The concept of unmanned technologies is being promoted in the agricultural sector of developed countries. Its high efficiency is expected due to the reduction of labor costs. However, the implementation of this concept in practice faces difficulties. The cost of creating new intellectual property results increases every year. To create a robot and ensure its novelty, inventors are forced to spend more and more money, resort to the services of outside engineers. Plant protection (including potato) remains an acute problem, requiring increased efficiency of treatments. This problem is exacerbated in light of the growing concern of machine operators about pesticide damage. To reduce the role of the "human factor," we are using a specially designed robot.

1 Introduction

One of the main measures aimed at increasing the importance of irrigated lands in agriculture is to increase the effectiveness of measures against irrational use and any violations [1]. As the experience of developed economies of the world confirms, in order to achieve the greatest economic effect, all parts of the technological process should be coordinated to the maximum extent possible [2]. In 2019, the Kleffmann Group made a survey among agricultural enterprises and peasant households cultivating potatoes in Russia. Based on the results of this survey, the dominant potato protection strategies can be analyzed. The leading potato diseases in terms of prevalence in Russia are potato diseases such as nightshade phytophthora (44% of the treated areas), Alternaria (22%) [3].

In the treatment of potatoes with means of protection in Russia, the largest share falls on fungicides. Among the treated areas fungicides account for about half, herbicides - about a quarter, insecticides and insecto-fungicide type – 1/10 each. This structure did not change significantly in 2017-2019.

According to the average cost of potato treatments in Russia, the first place is taken by fungicides (11.6 thousand rubles/ha in 2019), the second – insecto-fungicides (8.2 thousand

* Corresponding author: sanatpan@mail.ru

rubles/ha), the third - herbicides (5.2 thousand rubles/ha) [3]. The unit cost of potato protection in Russia is growing. The problem of controlling potato diseases remains urgent. This forces farmers to look for new, more effective ways to prevent and treat diseases. Robotic spraying of plants may replace the existing methods. So far, this method has not found wide application in the world crop production, remaining in pilot modes. But the scientific and practical groundwork is already being laid in this direction, so that in the long term, robots can become a worthy alternative to existing application methods.

Currently, technology plays a vital role in all areas of human activity. For example, there is progress in the development of agricultural machinery, but there is no tool that can determine and predict the effectiveness of plant development on agricultural land and at the same time help the decision maker to possibly import or export a cultivated crop, crop protection products, etc. The problem is that there is currently no technical tool that can help the decision maker to import and export wheat crops, because there is no available information about the condition of wheat crops, which can lead to some financial problems, as well as problems in food security. The current method of obtaining information on crop yield from satellite images is expensive. There are also traditional methods, such as using sensors to detect crop defects. But this method is also financially out of reach for most farmers.

Our idea is based on the use of a robot for which a neural network has been developed using artificial intelligence algorithms. The robot, in its turn, analyzes the received images of plants, displays all the information about the field on the screen of the robot, lists the problem areas of the field. Thus, all the information obtained in crop health analysis can help the farmer to improve crop yields and to know the shortcomings in the field. This is our first robot model that works on large fields and can be used not only by farmers, but also by authorities to help make food security decisions.

2 Methods

Such methods as: comparative, constructive analysis, as well as technical modeling, economic analysis, field research methods, graphical methods, drawing were used in the work.

The theoretical and methodological basis of the work is the scientific works of the Russian and foreign scientists on the problems and prospects of implementation of robotics achievements in agriculture; methodological developments related to the assessment of economic efficiency of precision agriculture in agricultural organizations have been applied. In addition, the author relied on the results of systemic research on digital agriculture, precision farming.

Labor costs per unit of work for robots with frames of three types of material (man-hours) are calculated by formula (1):

$$L = \frac{C_M + C_S}{P}, \qquad (1)$$

where L = labor costs per 1 hectare of work, man-hours; C_M = number of workers engaged in robot control, worker; C_S = the number of workers engaged in servicing the robot, worker; P = hourly capacity of the robot, ha/h.

The depreciation expense per unit of robot work (rubles/ha) is estimated by formula (2):

$$A = \frac{B \times \delta \times N}{100 \times \gamma \times P}, \qquad (2)$$

where A = depreciation charges per unit area, rubles/ha; B = carrying amount of the robot, rubles; δ = depreciation rate (for agricultural equipment = 15%); N = number of robots, pcs.; γ = seasonal loading of the robot, h; P = robot hourly output, ha/h.

3 Results

Our robot is designed to spray potatoes with liquid solutions of fungicides (Fig. 1-6). Its purpose is to prevent and control potato diseases.

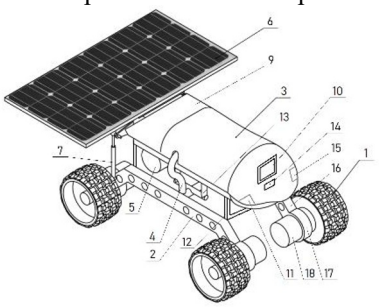

Fig. 1. A general view of the robot

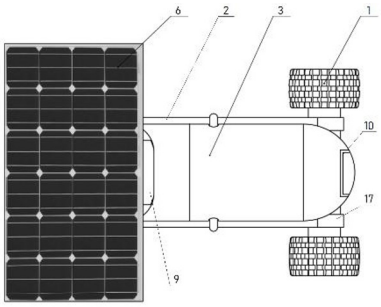

Fig. 2. A top view of the robot

The marked positions of the figures:
1 – wheels; 2 – frame; 3 – tank for storing working solution of fungicides; 4 – tube for spraying plants and soil; 5 – navigation device based on GLONASS; 6 – photoelectric solar panel; 7 – telescopic mount for solar panel; 8 – wire for power supply to the microinverter; 9 – compartment for microinverter, battery and onboard computer; 10 – lidar; 11 – LoRaWAN module; 12 – reservoir mount; 13 – linear actuator; 14 – HD-camera; 15 – LED-matrix; 16 – wheel mounting tube; 17 – wheel axle mounting assembly; 18 – wheel axle; 19 – water pump; 20 – working solution with fungicides; 21 – spoon for automatic stirring of working solution with fungicides; 22 – hinged bracket for the spoon; 23 – liquid level sensor.

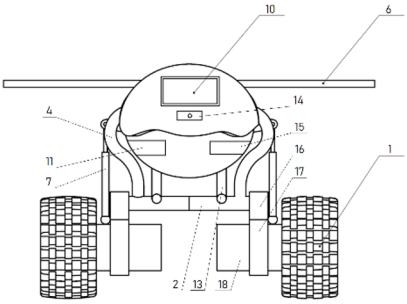

Fig. 3. A front view of the robot

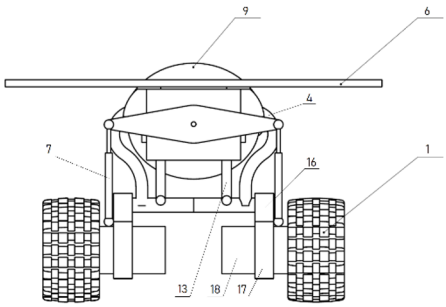

Fig. 4. A rear view of the robot

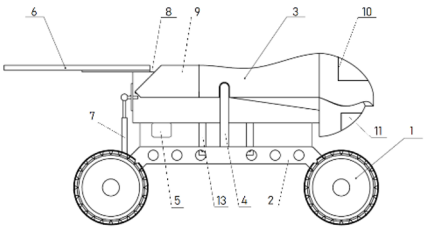

Fig. 5. A left side of the robot

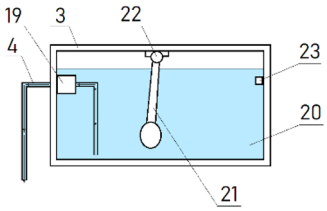

Fig. 6. A view of the internal components of the storage tank 3

Source: compiled by the authors.

The robot is equipped with a tube. It provides selective application of the working solution in order to save it and minimize soil contamination with fungicides. The boom is attached to the back of the body. The boom is connected by a hose to the fungicide storage tank. The tank has a capacity of 5 liters, but can be varied by replacing it with a larger tank. An HD-camera and lidar are mounted on the front of the body to perform terrain analysis, plant analysis, and spatial orientation functions.

Our robot can more efficiently explore the field and spot-check plant health using a neural network and field task maps. Using perceptrons for primary analysis of plant photos multiplies the effectiveness of detecting signs of disease.

The project contributes to solving the following farmers' problems by:

1) increasing crop yields and crop production efficiency due to the lack of on-line monitoring technologies, decision support for plant protection and mineral nutrition optimization considering much of the factors affecting yields not in isolation, but in an integrated approach;

2) increased efficiency of fungicides due to rational selection of their types and quantity;

3) reduction of chemical pressure on the soil and improvement of ecological conditions;

4) annually reducing the dependence of agricultural production on the market of plant protection products due to the availability of science-based decision-making methodologies.

The performance indicators of the robot compared to the traditional technology on the farm inspire hope for a positive perception of the robot in the eyes of new farms - potential customers.

4 Discussion

The unit cost of potato protection in Russia is increasing. The problem of controlling potato diseases remains acute. This forces farmers to look for new, more effective ways to prevent and treat diseases. Robotic spraying of plants may replace the existing methods. So far, this method has not found wide application in the world crop production, remaining in pilot modes. But a scientific and practical groundwork is already being laid in this direction, so that in the future, robotic spraying can be a worthy alternative to existing methods of application.

Various types of agricultural robots are beginning to arrive in crop production in the developed world. Among them, a special place is given to robotic crop sprayers for the prevention and treatment of crop diseases. Most of the robots are still in the testing phase. But we can be sure of the prospects of robots conquering the market. The following robot sprayer manufacturers are developing around the world: SwarmFarm Robotics (Australia), Yanmar, Kubota Corp. (Japan), John Deere, AGCO Fendt, Guss Automation (USA), Naio Technologies (France), etc. (Table 1).

Table 1. Comparative analysis of our robot with robots-analogues presented in the world market of field robotics

№	Functions and signs	SwarmBot 5	GUSS[3]	Anatis	SectionControl[4]	SMASH, Yanmar	YV01, Yanmar	NHDrive[5]	Robotti	Rosphere	Our robot
	Country										
1	Year in development	2018	2015	2015	2018	2020	2014	2017	2019	2013	2021

2	Working in tight spaces	–	+	+	–	+	+	–	–	+	+
3	Electric drive	+	–	+	+	+	+	+	+	+	+
4	Protection against thieves	+	+	n/a	–	+	+	+	+	–	–
5	Type of propulsion (W – wheels, C – caterpillars)	W	W	W	W	W	C	W	W	M[6]	W
6	Weight without filled up spraying tank, kg	300	5289	1000	n/a	n/a	1000	n/a	n/a	n/a	140
7	Carrying capacity, kg	n/a	n/a	n/a	n/a	n/a	n/a	n/a	750	n/a	90
8	Ease of self-repair	+	+	–	–	+	+	–	–	+	+
9	Battery charge, h	–	n/a	4	–	–	–	–	n/a	–	16
10	Price, ths. US dollars	–	285	n/a	6600	n/a	n/a	n/a	110	n/a	30
11	Cost of rent, ths. US dollars per year	50[1]	n/a	n/a	n/a	n/a	n/a	n/a	n/a	n/a	6
12	The robot's payback period, years	n/a[2]	1–3	n/a	n/a	n/a	n/a	n/a	n/a	n/a	2

Source: compiled by the authors based on [4-6], company websites, robotics reviews.
Notes:
1. With a lease term of at least 3 years.
2. n/a – no data available.
3. GUSS – Global Unmanned Spray System. Detailed specifications of the robot are given on the company's website https://gussag.com/ and in their brochure https://gussag.com/wp-content/uploads/2021/09/GUSS-brochure_online.3.8.pdf.
4. SectionControl – a robotic system from AGCO Fendt.
5. NHDrive – New Holland robot system.
6. Rosphere robot does not have a propulsor, instead it uses the principle of displacement of the center of mass.

"Robotti" robot (Denmark) has a spraying width of 3 m. It can reach speeds of up to 8 km/h during crop treatment. In 2020 an updated version of the robot with electric drive and lidar designed to identify barriers on the way will be released.

The "Oz" (France) robot can carry loads, following a human. It can also weed fields. Without recharging it can work for 7 hours. It costs 30 thousand euros. Before activating the autonomous mode, the robot needs to set the work parameters: the number of rows to

cultivate, their length, the width of the row spacing. Then the robot is able to drive around the field on its own, eradicating weeds.

The robot "Anatis" (France) navigates using GPS, lidar and cameras. The battery is suitable for 4 hours of work without recharging, after which it requires 4 hours of charging. There is also a second version of the robot - with a generator, which allows increasing the operating time of the robot.

The robot "SwarmBot 5" (Australia) was created by the University of Sydney and the University of Queensland in 2018. It is equipped with a boom sprayer. Several robots can cooperate and work in the same field. Together with Bosch, the team was able to implement the SwapNostics repair simplification system.

The SMASH series of robots from the Japanese Yanmar company benefits from the implemented machine vision system, which recognizes different types of plants and signs of diseases. The robot is focused on the care of spinach and vineyards. It can monitor plant health, apply chemicals, and take soil samples. Italians are helping to develop the robot.

The "YV01" robot is used in viticulture to spray the bushes with chemicals (fungicides). A powerful crawler system allows the robot to move over hills with a 45° slope.

Robot "GUSS" (USA) is a robotic sprayer for gardens. It is configured so that it can work under the crowns of garden trees, moving freely between them. The height of the robot is 193,0 cm. Front width is 251.5 cm (228.6 cm in the narrowed version). The length of the robot is 731.5 cm. The robot is equipped with a laser sensor, gyroscope, GPS system. Video cameras help to correct the course of the robot.

The Spanish robot "Rosphere" has a spherical shape and is able to roll over the field like a ball. It engages center-of-mass offsets to move. First of all, the robot is aimed at examining the plants in the fields, detecting signs of diseases, presence of harmful insects. The robot transmits data to the farmer's laptop via wi-fi.

SectionControl system from "John Deere" company (USA) is attached to the tractor and according to the principles of precision farming it brings preparations to the field.

From the variety of robots and technical systems, the activity of companies and startups in the market is clear. Many niches in the market of field robotics will start to be closed by the leaders, and in this "race" Russia should actively participate in order not to lag behind the advanced countries of the world.

Due to the lack of technologies adapted to the conditions of a region, allowing timely assessment of the current situation in the fields, to make a forecast of the risks of yield losses and to develop adequate measures to prevent losses in a timely manner. Development of technologies allowing to take into account simultaneously a large number of current factors indicating the state of ecosystem of each field will allow to:

1) make more prompt and effective decisions on the part of agribusiness in the sphere of crop production;

2) increase the level of yield of the main crops cultivated;

3) improve biological condition of soil and ecological safety of production due to development of optimal solutions for fertilizer application as well as reduction or complete rejection of treatments with chemical protection agents with increased norms of preparations application

4) increase the competitiveness of domestic producers in the global market by bringing their production in line with European quality standards and phytosanitary norms, regulating the content of residual amounts of chemicals, mycotoxins, etc.

Labor cost per unit of work for the robot is 0,24 man-hours. Depreciation charges for the robot are equal to 2,4 rubles/ha.

The approximate cost of the robot of 1,800,000 rubles shows that not every farmer will be able to afford the purchase of the development at this stage. A negative factor affecting the widespread implementation of the proposed robot is the lack of objective statistical data

on the economic effect of the introduction of such projects. Our projections remain tentative and need to be clarified. According to experts, the economic effect may be from 5 to 20% due to increased yield, cost reduction, more accurate analysis for the application of crop protection products. Therefore, robots for the purchase on a permanent basis may be of interest primarily to large farms. Consequently, it is necessary to additionally provide for the renting of robots for the season. Every farmer will be able to afford it, given that the cost of such lease will be 300 thousand rubles per season, it is not such a large sum, in our opinion.

5 Conclusion

Agricultural robotics is an applied science field that aims to improve the quality of life for farmers in their daily work in the field. We all dream of having robots that will take over such laborious chores as checking crops, treating them with preparations, and much more.
The project is at a high stage of readiness. We have already tested the robot in the field, which showed its performance and efficiency. Organizations that may be interested in this robot: farms, small and medium-sized agricultural producers growing spring wheat.
To implement this project, we had to solve a lot of scientific and engineering problems and create a ready sample of the robot.

As part of the projects, we implemented:

1) a software framework for developing wheeled service robots. This is a completely original software environment. Foreign analogues include ROS (operating system) - Wikipedia, and BrainOS: Autonomous Navigation Platform - Brain Corporation;

2) a controller for controlling the motorless motor-wheels. Enables precise movement of heavy robots on powerful motor-wheels. On the Russian market there are no controllers with similar characteristics on the free market;

3) the original autonomous charging system for wheeled robots. It allows you to accurately connect the charging collectors of the robot to the base station and make charging at currents above 50A;

4) we also created all the necessary design documentation, circuitry, software for user interaction.

Risks of our project:

1) Narrowly specialized market. We assess this type of risk as low. We have held negotiations with potential consumers, signed commercial contracts. We have an understanding of which consumer segment is interested in our development. We have made a marketing review of the market.

2) Insufficient preparation of the team. We assessed this risk as minimal. The team is staffed with the necessary specialists.

3) Commercial risks: the risk associated with the sale of products in the market; the risk associated with the solvency of the buyer; force majeure risk associated with changes in the cost of partner services. Such situation may arise as a result of several factors, including changes in macroeconomic indicators. Measures to protect against commercial risks: a) development of a dynamic pricing strategy; b) monitoring and prompt response to price changes of competitors; c) market research to predict the dynamics of demand; d) sound product marketing policy.

The project provides for marketing research to minimize these risks. It is also planned to apply measures to reduce costs, such as reducing inefficient costs, increasing productivity.

The effects of applying the robot include:

1) increased crop yields and crop production efficiency through the application of on-line monitoring technologies, decision support for plant protection and mineral nutrition optimization;

2) increased efficiency of fungicides due to rational selection of their types and doses;

3) reduction of pesticide pressure on soil and improvement of ecological conditions.

References

1. U. Mukhtorov, B. Sultanov, M. Li, Kh. Khushvaktova, S. Saidova, Z. Valieva, E3S Web of Conferences **386**, 05011 (2023) GISCA 2022 and GI 2022 https://doi.org/10.1051/e3sconf/202338605011
2. A. Durmanov, M. Li, O. Khafizov, A. Maksumkhanova, F. Kilicheva, J. Rozikov, Simulation modeling, analysis and performance assessment (2019) https://doi.org/10.1109/ICISCT47635.2019.9011977 ER - Game theory and its application in agriculture (greenhouse complexes) https://www.researchgate.net/publication/339562068_Simulation_modeling_analysis_and_performance_assessment
3. L. Gerasimova, Potato rating. Expert analysis of the Russian potato market, Agroinvestor. Agrotechnics and technologies. URL: https://www.agroinvestor.ru/opinion/article/34016-kartofelnyy-reyting-ekspertnyy-analiz-rossiyskogo-rynka-kartofelya/ July 8 (2020)
4. Agricultural robots, agrobots, ADNE.Info. URL: https://adne.info/agroboty/#5 March 26 (2020)
5. A. Boiko, Catalog of autonomous agricultural robots for work in the field, garden or greenhouse. URL: https://robotrends.ru/robopedia/katalog-avtonomnyh-robotov-dlya-raboty-v-selskom-hozyaystve
6. Robots go... Robots specialized/ Chief Plowman. URL: https://zen.yandex.ru/media/glavpahar/roboty-idutroboty-specializirovannye-5eb142c8260ca90dc3986874 May 5 (2020)