Comparison of turbulence models for solving problems of swirling jet flows

Murodil Madaliev[1*], *Dilshod* Navro'zov[2] , *Yunus* Hamrayev[2], *Nasillo* Hamroyev[2], *Dilnora* Sharipova[2], and *Salima* Do'stova[2]

[1]Institute of Mechanics and Seismic Stability of Structures named after M.T. Urazbaev of the Academy of Sciences of the Republic of Uzbekistan, 100000 Tashkent, Uzbekistan.
[2]Bukhara Institute of Natural Resources Management of the National Research University "TIIAME", 200100 Bukhara, Uzbekistan

Abstract. There are several turbulence models that can be used to solve the swirling jet problems, which are typical turbulence problems. A comparison of these models allows us to determine which one is better suited for a given task. When comparing turbulence models for the swirling jet problem, the most important criteria are the accuracy and stability of the solution. Accuracy is assessed by comparison with experimental data or other numerical methods, and stability is assessed by the absence of oscillations and convergence of the solution. In addition, it is also important to consider the computational complexity of each model and its applicability to a specific problem. The swirling flow in a nozzle is studied in the article using various turbulence models (*SA, k-ε, k-ω, L-VEL, v^2-f, yPlus, SST*). To evaluate the performance of different CFD (Computational Fluid Dynamics) turbulence models, their numerical results for velocity profiles are compared with known experimental data.

1 Introduction

Swirling flows, due to their wide practical application, represent an important branch of modern hydrodynamics. The complexity of these flows leads to the use of the most modern research methods in their study. The universally adopted methods of numerical modeling, and various fine measurement techniques, including non-contact ones, which are no longer the property of individual research laboratories and are becoming increasingly widespread, allow us to hope for significant progress in the study and prediction of the properties and structure of complex hydrodynamic processes, including swirling flows. Swirling flows are widespread in many natural phenomena and are often used in technology [1]. As an example (in the absence of combustion), we can mention cyclones and tornadoes in the atmosphere, whirlpools in rivers and reservoirs, vortex wake left by an airplane wing, separators and heat exchangers of cyclone type, sprinklers and agricultural machines spraying fertilizers, jet pumps, and chemical reactors with vortex flow [2]. Elements of the theory of swirling flows are used even when analyzing the flight of a boomerang and a bee. In technical combustion devices, the significant and beneficial effect of the swirling of supplied air and fuel flows on

* Corresponding author: Madaliev.ME2019@mail.ru

the stabilization and intensification of the combustion process is intensively used to ensure efficient and environmentally friendly combustion of fuel in a wide variety of practical areas: in gasoline and diesel engines, in gas turbines and gas turbine engines, industrial furnaces, boilers, and a number of other heating systems. As experimental studies show, swirl radically affects the flow field; its important properties and characteristics, such as the jet propagation and attenuation and the ejection of matter by a jet in inert flows, the size and shape of the flame and the intensity of combustion in reacting flows, significantly depend on the degree of swirl, imparted to the flow [3].

Experiments are a great help for designers, however, their setting is quite expensive; preliminary calculation of the flow field using mathematical models and numerical methods would significantly contribute to reducing the cost of development and operating expenses. The duration and cost of development can be significantly reduced by combining experimental and theoretical data on combustion aerodynamics with detailed numerical gas-dynamic calculations, and applying and improving appropriate software [4].

The influence of the initial flow swirl on the flow field increases sharply with an increase in the degree of swirl. The effect of weak swirl (S<0.4) is reduced to an increase in the width of the free or confined jet: the increase in the width of the jet, mixing of the flow, and the decrease in jet velocity occur more intensely with an increase in the degree of swirl. Although there may be significant pressure gradients in the transverse (or radial) direction at any section of the jet, the non-zero gradient is a consequence of the effect of the swirl on the pressure distribution. The most significant and useful phenomena in swirling jet flows for applied problems with combustion can be considered the existence of a recirculation zone formed in the central part at supercritical values of the swirl parameter ($S = 0.6$ for swirling devices with straight outlet). Numerical studies of swirling flows with standard two-equation k-ε turbulence models have shown that these models can significantly underestimate mixing rates. Modifications of two-equation models for improvement [5-9]. Модификации моделей с двумя уравнениями для улучшения [5-9].

Predictions of mixing in swirling flows varied with changes in eddy viscosity. Such methods as Direct Numerical Simulation (DNS) and Large Eddy Simulation (LES) are labor-intensive and require high-speed computers to solve complex aerodynamic problems. Therefore, their wide practical use is associated with the development of computer technology and, according to experts, can begin only at the end of this century. Therefore, in the near future, semi-empirical methods will remain the main working tool for solving applied problems of aerodynamics [10-14].

Therefore, the purpose of this study is to numerically analyze swirling flows using different turbulence models and compare their results. The results of this study can be useful for understanding turbulence, separation, and reattachment, and for selecting appropriate turbulence models, which are important for the study of practical engineering applications.

2 Physical and mathematical formulation of the problem

In the studies of flows, a special pedestal was mounted on a nozzle block with d = 15 mm (Fig. 1), on which a quartz glass cylinder (with inner diameter D0 = 77 mm and the height varying from 120 mm to one and a half meters) was vertically placed. The choice of the cylinder diameter was made based on the condition that the ratio slightly exceeded the value of D0/d=5 to avoid asymmetric reattachment of an unswirled or moderately swirled jet to the inner surface of the cylinder and precession [15], and to explore the modification of a highly swirled flow [16]. The inclination angle of a swirler is 300.

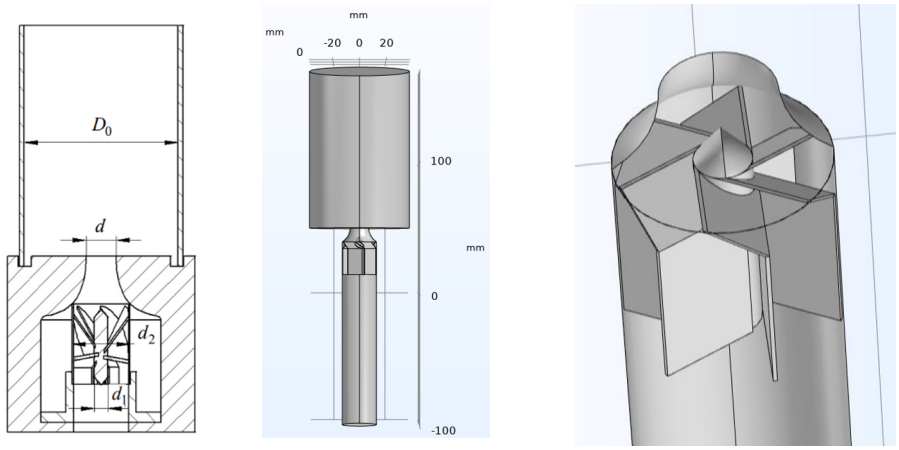

a) b) c)

Fig. 1. Scheme of calculation areas a) dimensions of the experimental setup; b) geometry of the general and c) images of the swirler in the *Comsol Multiphysics* software

3 Mathematical formulations and computational methods

To numerically study the problem posed, the Reynolds-averaged Navier-Stokes system of equations is used, which has the following form:

$$\begin{cases} \rho \dfrac{\partial \overline{U}_i}{\partial t} + \rho \overline{U}_j \dfrac{\partial \overline{U}_i}{\partial x_j} + \dfrac{\partial \overline{p}}{\partial x_j} = \mu \dfrac{\partial^2 \overline{U}_i}{\partial x_j \partial x_j} + \dfrac{\partial}{\partial x_j}\left(-\overline{\rho v_i' u_j'}\right), \\ \dfrac{\partial \overline{U}_i}{\partial x_j} = 0. \end{cases} \tag{1}$$

Here $\overline{U}_i$ is the air flow velocity; $\overline{p}$ is the hydrostatic pressure; ρ is the gas density; μ is its molecular viscosity; $\overline{v_i' u_j'}$ are the components of the Reynolds stress tensor. This system of equations is not closed and semi-empirical turbulence models are used to close it. In many models, to close the system of equations (1), the generalized Boussinesq hypothesis is used, called the linear approach:

$$-u_i' u_j' = v_t \left(\frac{\partial U_i}{\partial x_j} + \frac{\partial U_j}{\partial x_i} \right) - \frac{2}{3} k \delta_{ij}.$$

Here v_t is the turbulent viscosity to be determined.

In this study, seven turbulence models included in the COMSOL Multiphysics software package were used to determine turbulent viscosity.

Turbulence models

The Spalart-Allmaras model is one of the turbulence models used to solve the Navier-Stokes equations in computer models. This model was developed by François Spalart and Philippe Allmaras in 1994. The Spalart-Allmaras model is based on the equation for variable

t (or t-convection), which describes the transport of effective viscosity of turbulence. This variable relates the rate of dissipation of turbulent energy and its effective viscosity. Unlike other turbulence models, the Spalart-Allmaras model can describe turbulence in low-turbulence regions where other models may be ineffective. This is especially important for problems with low Reynolds numbers such as flow around flat plates. The Spalart-Allmaras model has several advantages over other turbulence models, including a simpler mathematical form and lower computational capacity needed. However, like all turbulence models, it has its limitations and may not be suitable for all types of problems. Overall, the Spalart-Allmaras model is an effective turbulence model for solving the Navier-Stokes equations in various applications, including aerodynamics and hydrodynamics. This model belongs to the class of one-parameter turbulence models. Only one auxiliary equation appears for calculating the kinematic coefficient of eddy viscosity [17, 18].

$$(\mathbf{U}\cdot\nabla)\tilde{v} = C_{b1}\tilde{S}\tilde{v} - C_{w1}f_w\left(\frac{\tilde{v}}{d}\right)^2 + \frac{1}{\sigma_v}\nabla\left([(\nu+\tilde{v})\nabla\tilde{v}]\right) + \frac{1}{\sigma_v}C_{b2}\nabla\tilde{v}\nabla\tilde{v}. \tag{2}$$

Turbulent eddy viscosity is calculated from $\nu_t = \tilde{v}f_{v1}$

k-ε turbulence model: The k-ε model is one of the most common turbulence models used to solve the Navier-Stokes equations in computer models. It was developed in the 1970s and has since been widely used in a variety of applications including aerodynamics, fluid dynamics and engineering branches. The k-ε model assumes that turbulence can be described by two variables: the energy of turbulent oscillations (k) and their dissipation rate (ε). Equations for k and ε are determined based on the Navier-Stokes equations and equations for the transport of turbulent energy and its dissipation.

$$\begin{cases} (\mathbf{U}\cdot\nabla)k = \nabla\left[(\nu+\dfrac{\nu_t}{\sigma_k})\nabla k\right] + P_k - \varepsilon, \\ (\mathbf{U}\cdot\nabla)\varepsilon = \nabla\left[(\nu+\dfrac{\nu_t}{\sigma_\omega})\nabla\varepsilon\right] + C_{1\varepsilon}\dfrac{\varepsilon}{k}P_k - G_{2\varepsilon}\dfrac{\varepsilon^2}{k}. \end{cases} \tag{3}$$

Turbulent eddy viscosity is calculated from $\nu_t = C_\mu \dfrac{k^2}{\varepsilon}$.

SST model: The SST (Shear Stress Transport) model is a turbulence model that allows us to describe highly developed turbulence flows, such as turbulent flows around aerodynamic bodies and turbulent flows in hydrodynamics. The SST model is a hybrid of two other turbulence models: the k-ω model and the k-ε model. It uses the k-ω equations to describe turbulence in the boundary layer where flow velocity is high, and the k-ε equations - to describe turbulence in regions where flow velocity is low.

$$\begin{cases} (\mathbf{U}\cdot\nabla)k = \nabla[(\nu+\sigma_k\nu_t)\nabla k] + P - \beta^*\omega k, \\ (\mathbf{U}\cdot\nabla)\omega = \nabla[(\nu+\sigma_\omega\nu_t)\nabla\omega] + \dfrac{\gamma}{\nu_t}P - \beta\omega^2 + 2(1-F_1)\dfrac{\sigma_{\omega 2}}{\omega}\nabla\omega\nabla k. \end{cases} \tag{4}$$

Turbulent eddy viscosity is calculated from $\nu_t = \dfrac{ak}{\max(a\omega, Sf)}$.

v2-f turbulence model: The v2-f model is one of the turbulence models used to solve the Navier-Stokes equations in computer models. This model was developed in the 1990s and is designed to simulate flows with low to moderate turbulence. The v2-f model is based on two variables: the square of vorticity (v2) and function f, which is related to the rate of dissipation of turbulent energy. The equations for v2 and f are determined based on the Navier-Stokes equations and the equations for the transport of turbulent energy and its dissipation. One of the advantages of the v2-f model is its ability to describe flows with low to moderate turbulence, which presents difficulties for other turbulence models [19, 20].

$$\begin{cases} (\mathbf{U}\cdot\nabla)k = \nabla\left[(\nu+\frac{\nu_t}{\sigma_k})\nabla k\right] + P - \varepsilon, \\ (\mathbf{U}\cdot\nabla)\varepsilon = \nabla\left[(\nu+\frac{\nu_t}{\sigma_\varepsilon})\nabla \varepsilon\right] + \frac{1}{\tau}\left(C'_{\varepsilon 1}(\zeta,\alpha)P_k - C'_{\varepsilon 2}(k,\varepsilon,\alpha)\varepsilon\right), \\ (\mathbf{U}\cdot\nabla)\zeta = \nabla\left[(\nu+\frac{\nu_t}{\sigma_\zeta})\nabla \zeta\right] + \frac{2}{k}\left[\alpha^3\nu + \frac{\nu_t}{\sigma_\zeta}\right]\nabla k \nabla \zeta + (1-\alpha^3)f_w + \alpha^3 f_h - \frac{\zeta}{k}P_k, \end{cases} \tag{5}$$

Turbulent eddy viscosity is calculated from $\nu_t = C_\mu k \zeta \tau$.

4 Calculation grids

In this study, a tetrahedral calculation grid was used (Fig. 2).

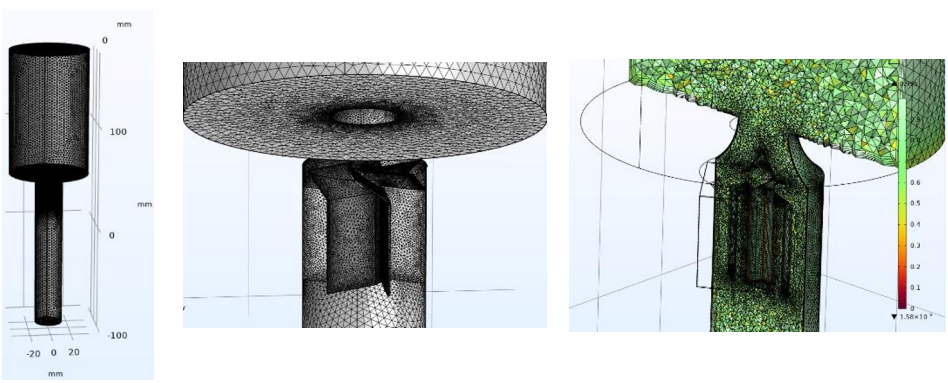

a) b) c)

Fig. 2. Calculation grid

To solve the problem, a 2,661,511 computational grid was used for all turbulence models. For the system of equations (1-5), obvious no-slip boundary conditions were set on solid walls. At the outlet, extrapolation conditions were assumed for all parameters. At the inlet, uniform profiles of the longitudinal velocity component $V_x = U_0$ were applied, and the transverse velocity component and pressure were taken equal to zero $V_y = P = 0$.

5 Solution method

The finite element method was used [17-18] to numerically solve the system of initial non-stationary equations (1-5). For the solution, standard *COMSOL Multiphysics 6.1* solvers were used [19].

6 Calculation results and discussion

Figure 3 shows isolines of longitudinal, transverse, and tangential flow velocity and pressure for various turbulence models.

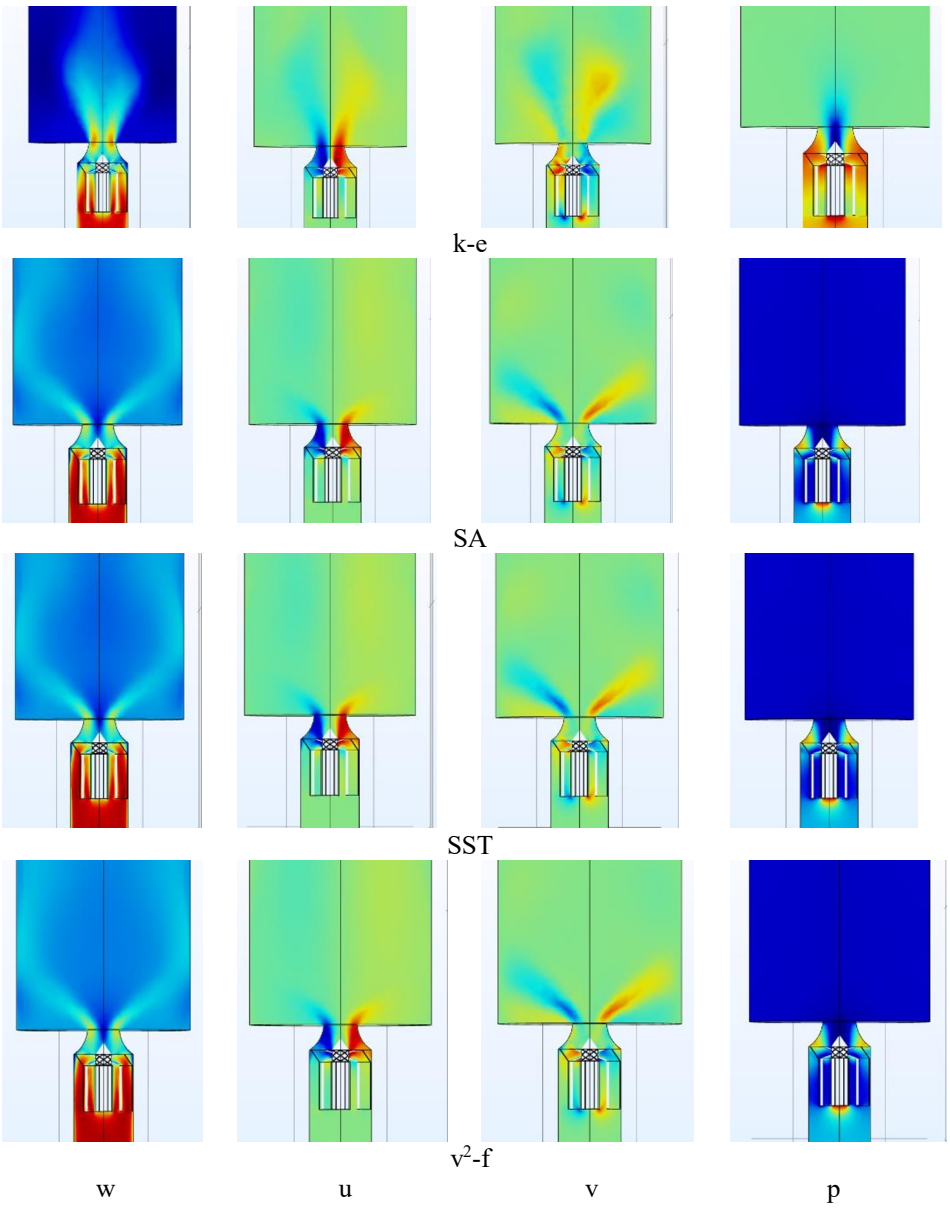

Fig. 3. Isolines of longitudinal velocity and flow pressure for various turbulence models

Figure 4 shows the directions of the flow velocity vector for various turbulence models.

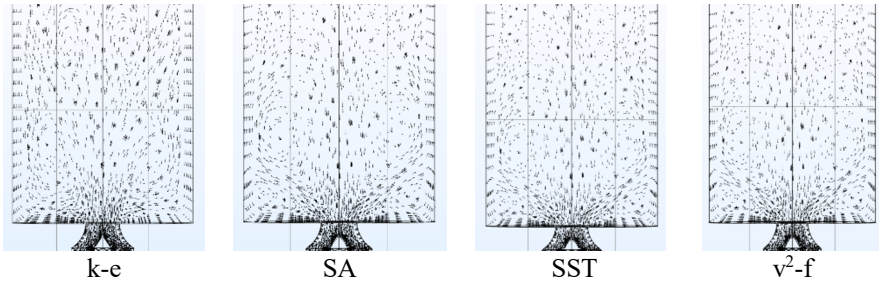

Fig. 4. Directions of the flow velocity vector for various turbulence models

7 Conclusion

The main goal of this study is to analyze various turbulence models of the COMSOL software for the numerical study of swirling turbulent flows. The numerical study was conducted with SA, k-ε, SST, and v2-f turbulence models. The results obtained were compared with experimental results. The following conclusions can be drawn from the comparison:

The SA, SST and v2-f turbulence models show approximately the same results. The differences between numerical results and experimental data stem from the fact that errors in numerical results can come from many different sources, including turbulence models. Of course, this informal ranking of turbulence models highly depends on the user and the data of interest for the user. However, these results have provided significant and invaluable insight into the capabilities of turbulence models, and revealed which CFD turbulence model can be used for the problems of industrial design. We can state that the v2-f turbulence model very well describes swirling flows.

References

1. D. James Chenometh, Ch. Kannepalli, S. Arunajatesan, A. Hosangadi, ResearchGate (2008) https://doi.org/10.2514/6.2008-4746
2. S. Arunajatesan, N. Sinha, International Journal of Aeroacoustics **2(1),** 65-91 (2003)
3. S.A. Arunajatesan, S.M. Dash, *Progress Towards Hybrid RANS-LES Modeling For High-Speed Jet Flows*, Paper No.AIAA-2002-0428, 40th AIAA Aerospace Sciences Meeting and Exhibit, Reno, NV, January 14-17 (2002)
4. N. Sinha, A. Hosangadi, S.M. Dash, Unsteady Reacting, Multi-phase Jet/Plume Flowfield Problems," CPIA Pub. 568, May (1991)
5. M.M. Rai, P. Moin, Journal of Computational Physics **109,** 162-192 (1993)
6. J.R. Forsythe, Numerical Computation of Turbulent Separated Supersonic Flow Fields (Wichita State University, 2000)
7. A. Smirnov, S. Shi, I. Celik, Trans. ASME. Journal of Fluids Engineering **123,** 359-371 (2001)
8. M.G. Hall, Ann. Rev. Fluid Mech. **4,** 195–218 (1972)
9. A.K. Gupta, D.G. Lilley, N. Syred, Swirl Flows (Abacus Press, Cambridge, MA, 1984)
10. O. Lucca-Negro, T. O'Doherty, Prog. Energy Combust. Sci. **27(4),** 431–481 (2001)
11. K. Oberleithner, C.O. Paschereit, R. Seele, I. Wygnanski, AIAA J. **50(7)**, 1437–1452 (2012)

12. Z.M. Malikov, M.E. Madaliev, Vestnik Tomskogo Gosudarstvennogo Universiteta. Matematika i Mekhanika **71,** 121-138 (2021)
13. Z.M. Malikov, M.E. Madaliev, Journal of Wind Engineering and Industrial Aerodynamics **231,** 105171 (2022)
14. Z.M. Malikov, M.E. Madaliev, Vestnik Tomskogo Gosudarstvennogo Universiteta. Matematika i Mekhanika **72,** 93-101 (2021)
15. G.J. Nathan, S.J. Hill, R.E. Luxton, J. Fluid Mech. **370,** 347–380 (1998)
16. N. Syred, K.R. Dahman, J. Energy **2,** 8-15 (1978)
17. Z.M. Malikov, M.E. Madaliev, D.P. Navruzov, K. Adilov, AIP Conference Proceedings **2637,** 040023 (2022) https://doi.org/10.1063/5.0118473
18. Z.M. Malikov, D.P. Navruzov, K. Adilov, S.R. Jurayev, Computer Applications for Management and Sustainable Development of Production and Industry (CMSD2021) **122510H** (2021) https://doi.org/10.1117/12.2631607
19. B.M. Kholboev, D.P. Navruzov, D.S. Asrakulova, N.R. Engalicheva, A.A. Turemuratova, Int. J. of Applied Mechanics and Engineering **27(2),** 115-123 (2022) https://doi.org/10.2478/ijame-2022-0023
20. Z.M. Malikov, D.P. Navruzov, Kh. Djumayev, E3S Web of Conferences **264,** 01008 (2021) https://doi.org/10.1051/e3sconf/202126401008