Positional-velocity control of the manipulator built on the basis of an intelligent mechatron module

Temurbek Rakhimov[1*], *Sultonbek* Erkinov[1], and *Gulhayo* Takhirova[2]

[1] Tashkent state technical university named after Islom Karimov, 100095 Tashkent, Uzbekistan
[2] Urgench branch of Tashkent University of Information Technologies named after Muhammad al-Khwarizmi, 220100 Urgench, Uzbekistan

Abstract. The use of Industry 4.0 technologies in modern production serves to increase production efficiency. Robots and robotic complexes with innovative intelligent control are widely used in industrial production. However, the variety and complexity of their control methods and modes negatively affects the operators' working time and production productivity. In such cases, it is necessary to improve the control methods and to develop the technologies used in the industry, including robots and robotic manipulators, which allow to perform short movements with high accuracy and speed. The method and modes of position-velocity control of the manipulator built on the basis of the intelligent mechatron module are considered in the article. At the same time, a structural scheme of the combined control system was developed, which calculates the values of relative movement speeds for the links of the manipulator execution mechanism based on mathematical models. In addition, the requirements for the position-velocity control system, methods for eliminating the transient processes occurring during the control process are proposed. The advantages of time saving and control method in position-velocity control during manipulator control by the operator are given.

1 Introduction

When a robotic manipulator built on the basis of mechatronic modules with intelligent control moves, it is a complex task to choose the type of control due to this movement and depending on the speed and acceleration of the relative movement of the links. Robotic complexes and robotic manipulators are widely used in the management of various objects and processes of control systems, their efficiency is directly related to the execution element and the types of their control methods. The process of controlling the manipulator built on the basis of the intelligent mechatron module is performed differently based on its functions.

* Corresponding author: rahimov_timur@bk.ru

2 Research methodology

In most cases, one of the most common methods of manipulator control is velocity vector control [1,2]. With this method of control, the human operator generates the vector $\dot{x}_0$ of the desired speed of the manipulator handle using the main device. Counter devices calculate the values of the relative movement speeds required for the $\dot{q}_0$ links of the manipulator execution mechanism based on the following relationship $\dot{x}_N = [v_N|\omega_N]^t = A\dot{q}$.

If $A \neq 0$, then

$$\dot{q}_0 = kA^{-1}(q)\dot{x}_0, \qquad k = const \tag{1}$$

$A(q)$ is used to invert the matrix when calculating the relative movement speed of the manipulator. The structural diagram of the speed vector control system is shown in Fig. 1. Usually, when controlling a manipulator built on the basis of an intelligent mechatronic module with a speed vector, handles are used that allow direct measurement of the vector components $\dot{x}$ determined by the operator. When determining the position-velocity vector, $\dot{q}_0 = kA^{-1}(q)\dot{x}_0$ and $\delta q_0 = kA^{-1}(q)\delta_0$ results from the comparison of the expressions that the manipulator built on the basis of the intelligent mechatron module can be used to control the algorithm of position and speed methods the defining equations are the same. This allows both control methods to be implemented in the form of a single position-velocity control system for the manipulator [2,3]. Each of these combined control methods, including positional and high-speed methods, is the most effective for performing operations by a manipulator built on the basis of an intelligent mechatronic module. It is recommended when using the positional combination control method to perform assembly operations that require high precision and small movements. The speed vector control method is considered to be more effective for the implementation of large transport movements in the workplace of the manipulator.

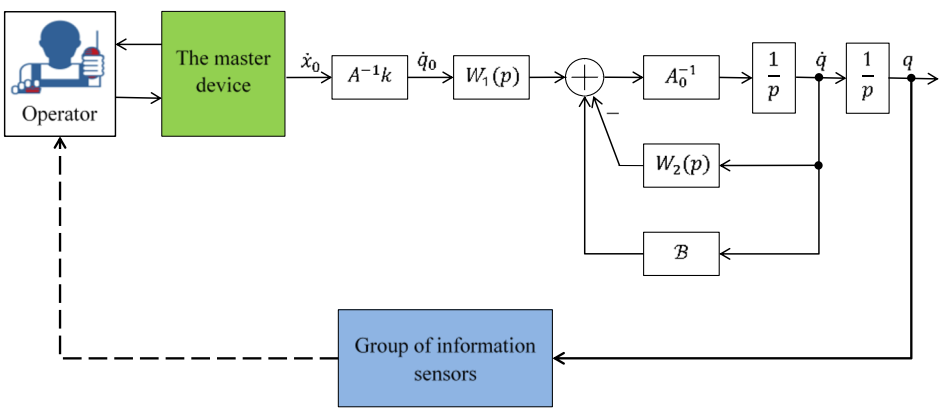

Fig. 1. Structural diagram of the speed vector control system.

The ability to implement various control methods in a combined system can significantly increase its efficiency and facilitate the operator's work.

In this type of combined system, the transition from one operating mode to another can occur both by operator commands and automatically. In the first case, it is not difficult to implement a combined positional speed control system, for example, it can be implemented according to the scheme shown in Figure 2 [3,4]. In this scheme, intelligent mechatronic modules are used to obtain positional movements of the manipulator. With the operator's increase command, the K_l switch activates one of the control channels. Case 1 corresponds to the positional control method, and case 2 corresponds to the high-speed control method.

3 Analysis and results

Let's consider one of the methods of intelligent switching of modes in a position-velocity system. This switching method is based on the fact that the main devices have a clearly defined range for setting control signals. In the case of speed vector control, the direction of the vector $\dot{x}_0$, can be specified, and for this the relation $|\dot{x}_0|_{min} \leq |\dot{x}_0| \leq |\dot{x}_0|_{max}$ is appropriate. The high value of the handle speed is selected based on the comfort conditions of the operator.

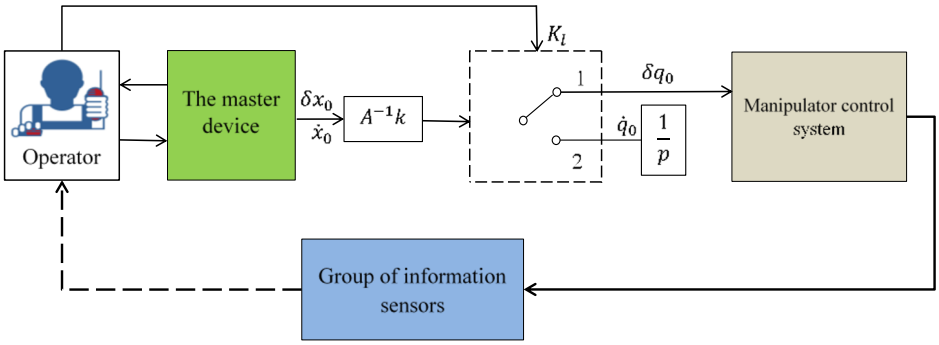

Fig. 2. Structural diagram of the position-velocity control system.

The lower limit is determined based on the level of errors in the conversion of the control signals $\dot{x}_0$ by the counter and amplifier-converter devices to the speed values $\dot{q}_0$ of the relative displacement of the manipulator links. If $|\dot{x}_0|_{min} = 0$, then, if the control signal is equal to zero, unequal control signals may be selected. Based on this reasoning, it is recommended to control $|u| < u_0$ handles with small deviations $[0, |\dot{x}_0|_{min}]$ in the case of high - speed large deviations $|u| > u_0 -$ if corresponding to the control signal interval [3,5,6]. The additional way management method and the system is to be placed in the system that is the demand for transition to another mode without the occurrence of transient processes during the passage. Figure 3 provides a functional scheme of position management of the playing mechanism management system. The scheme is the task of the scheme, through the small actions of managing the handle, form control signals for the handle of the manipulator to move in a particular direction. It is transformed into speed vector control channel, which is not a non-defective mechanism, or non-device and counter, [3,7], consisting of deficitive mechanism, consisting of the deficized mechanism. Outgoing signals of both channels are summarized and are given to mechatron modules based on the executive element.

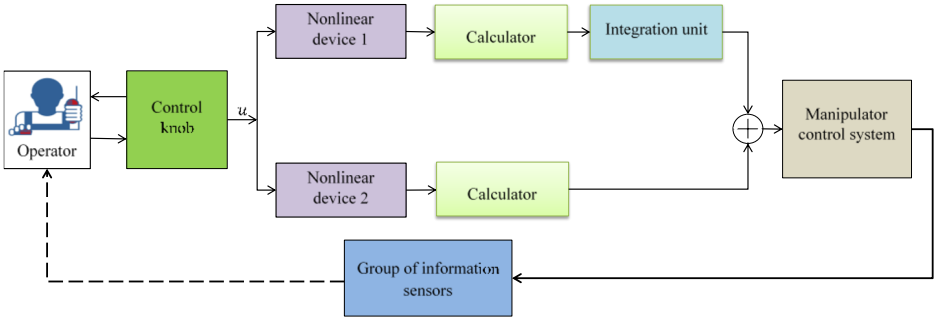

Fig. 3. Positional scheme of the position of speed system.

In manipulator control modes, the input is changed depending on the value of the control signal. The nonlinear device transfers 2 control signals to the positional control channel, receiving the value $|u| \leq u_0$. Control signals that exceed the u_0 limit, $|u| > u_0$, are assigned to the control channel along the speed vector. This method of the manipulator management system allows the position and direction of the handle to the selected coordinate management system anywhere in the service sector (Figure 4). The recorded features of the position-high speed system are taken in the development of the scheme of the counter control device. Figure 5 provides a separate meteter unit scheme for the position of speed management [3.8]. Using the management handle by the operator in the scheme, it forms $u_1, \dots, u_N$, they are given to the block of control signals, as well as access to the logical device and manipulator.

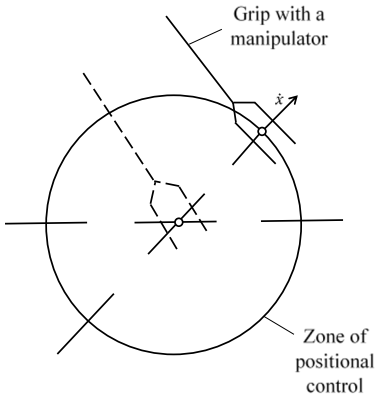

Fig. 4. The location of the position of position management zone of the manipulator holster.

Outgoing signals of nonlinear translations are processed by the calculation device according to $\tilde{u}_i$ (1):

$$s = kA^{-1}(q)\tilde{u},$$

$$s = [s_1 \dots s_N]^t, \quad \tilde{u} = [\tilde{u}_1 \dots \tilde{u}_N]^t \tag{2}$$

$s_1 \dots s_N$ signals are transmitted to the block of switching and integration. This block contains K_l2, K_l3 the K_l4, which includes manage one or more channels by depending on the commands of the access block [3.9]. In this case, the s_i signals are supplied to the input of the manipulator mechatron modules through the integrator or through aperiodic link, and in the first case, there is a high - speed control, and in the second-positional control.

Non-selective transiter sight block provides zero value of the $\tilde{u}_i$ signals when switching from position management mode to high speed management mode. K_l1 keys are closed in position management mode and is opened in high speed management mode. If the values of control signals u_{i0} exceed the borderal values, then K_l1 and K_l2 keys will be closed and K_l3 and K_l4 are open. The proposed Scheme is used to manage the vector.

K_l1, K_l2, K_l3, K_l4, is administered with logical elements of the indicator and logical devices that perform the functions of "or" and" not ".

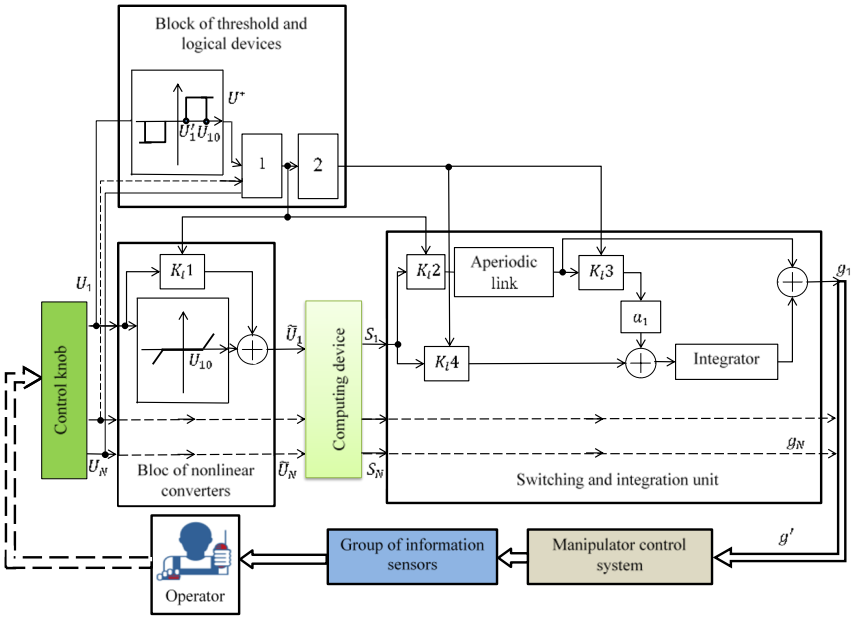

Fig. 5. Schematic of the calculation device for the position-velocity control system.

Feedback from high-speed to positional control mode is performed only if the condition $||u_i| < u_i', i = 1, \dots N$ is fulfilled simultaneously for all control channels [3,7,10]. Therefore, the positional control zone of the manipulator with accuracy up to the value of the sensitivity zone of the manipulator will have a central location relative to the handle of the manipulator. When switching from the position control mode to the high speed control mode, the K_l2 switch is opened. If the signal s_j is equal to s_{j0} during the transition to $i = 0$, a transient process occurs at the output of the aperiodic link.

$$s_j(t) = s_{j0} exp(-t/T_i), \qquad T_i = const \tag{3}$$

At the same time, the switch K_l3 is closed and the signal of the transient process signal $s_j(t)$ is integrated and multiplied by a constant coefficient a_i:

$$\tilde{s}_j(t) = a_j \int_0^t s_j(t)\, dt = a_j T_j s_{j0} \left(1 - exp\left(-\frac{t}{T_j}\right)\right) \tag{4}$$

In this case, $g_j(t)$ is a signal

$$g_j(t) = s_j(t) + \tilde{s}_j(t) = s_{j0}(1 - a_j T_j)\, exp\left(-\frac{t}{T_j}\right) + a_j T_j s_{j0} \tag{5}$$

It follows that, choosing $a_j = 1/T_j$, we get $g_j(t) = s_{j0}$ for $t > 0$, that is, the transition from the position control mode to the high speed control mode does not cause transient processes in the system. Feedback occurs when very small signals $|u_i| < u_i'$ are given from the high-speed mode to the positional mode, and the threshold value is determined according to the sensitivity zone of the control device. Therefore, when describing the control system, the transient processes that occur in this case can be neglected. The position-speed control capability greatly simplifies the operator's work and improves efficiency compared to a high-speed control system. Figures 6 and 7 show the characteristics of the transient processes in the speed vector intelligent control system and the position speed system. These characteristics are obtained with the help of computer modeling and simulation of the

manipulator. A straight three-link mechanism can be chosen as a manipulator. The operator is required to move the handle to another specific position (x_z, y_z, φ_z) with a certain accuracy within a minimum time, observing its movement on the display screen.

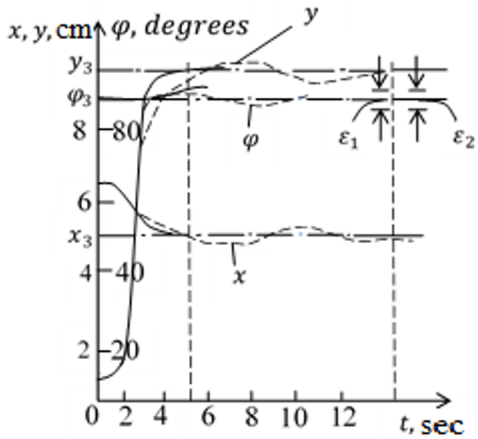

Fig. 6. Characteristics of transient processes in the speed vector control system.

From the graphs in Figures 6 and 7, it can be concluded that when performing the transfer operation with low accuracy ($\varepsilon_1 = \pm 2\ mm$), the time required for positional speed and high speed control methods is approximately the same [3,6,10]. At the same time, with a fourfold increase in the positioning accuracy of the gripper positioning compared to the initial state ($\varepsilon_1 = \pm 0{,}5\ mm$), the operation time of the combined control method is about three times less than that of the other control methods.

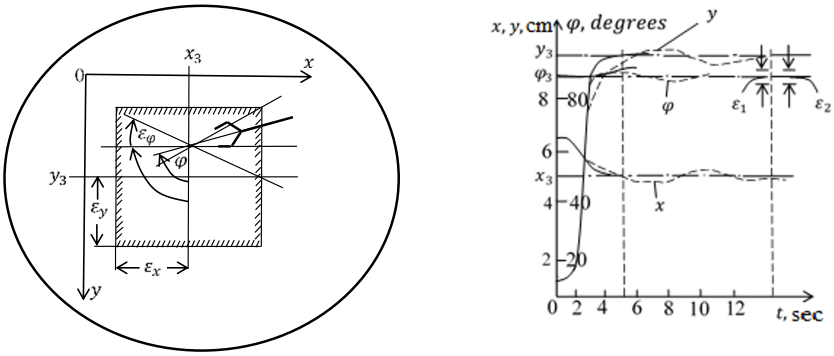

Fig. 7. Characteristics of the transient process in the position speed control system.

4 Conclusion

The proposal of a position-velocity control system for performing operations that require high-precision control of the position and direction of the manipulator handle considered in the article allows manipulators to perform short displacement movements with high accuracy and speed. The manipulator position-velocity control method and modes built on the basis of the intelligent mechatron module serve to eliminate the transient processes that occur during the control process. The structural scheme of the computing device for the position-velocity control system greatly simplifies the operator's work in controlling the velocity vector and allows to eliminate the transient processes that occur during the control process. Computer

modeling and simulation were used to obtain the characteristics of the transient processes in the position-velocity vector intelligent control system.

References

1. A.F. Vereshhagin, V.L. Generozov, V.B. Kucherov, Tehnicheskaja kibernetika **3,** 66-71 (1975)
2. R. Kelly, V. Santibancez, A. Loria, Springer-Verlag London Limited (2005)
3. V.S. Medvedov, A.G. Leskov, A.S. Jushhenko, Sistemy upravlenija manipuljacionnyh robotov (Moscow, Nuka, 1978)
4. Dzh. F. Ljuger, Iskusstvennyj intellekt: strategii i metody reshenija slozhnyh problem (Moscow, Vil'jame, 2003)
5. Kh.N. Nazarov, Intellektualnye mnogokoordinatnye mehatronnye moduli robototehnichesih sistem (Tashkent, Mashhur-Press, 2019)
6. I.N. Egorov, Pozicionno-silovoe upravlenie robototehnicheskimi i mehatronnymi ustrojstvami (Publishing of Vladim. State univ., 2010)
7. Ye.I. Yurevich, Upravlenie robotami i robototexnicheskimi sistemami (Sankt-Peterburg, 2000)
8. V.I. Syrjamkin, Informacionnye ustrojstva i sistemy v robototehnike i mehatronike (Tomsk, Izd-vo Tom. un-ta, 2016)
9. Kh.N. Nazarov, Mexatronika, avtomatizasiya i upravlenie **4,** 26-31 (2005)
10. Kh.N. Nazarov, T.O. Rakhimov, Journal of Modern Technology and Engineering **4(2),** 132-136 (2019)
11. T.O. Rakhimov, E.E. Rakhmanova, S.M. Erkinov, E3S Web of Conf. **401,** (2023) https://doi.org/10.1051/e3sconf/202340104007
12. Kh.N. Nazarov, N.R. Matyokubov, T.O. Rakhimov, Advances in Intelligent Systems and Computing **1323,** 201-205 (2020) https://doi.org/10.1007/978-3-030-68004-6_26
13. M. Zaharuddin, Boston Spa, Wetherby West Yorkshire, LS23 7BQ (2003)
14. Ya. Ruzmetov, D. Valieva, E3S Web of Conferences **264,** 05059 (2021) https://doi.org/10.1051/e3sconf/202126405059
15. T.O. Rakhimov, E.E. Rakhmanova, S. M. Erkinov, E3S Web of Conferences **401,** 04007 (2023). https://doi.org/10.1051/e3sconf/202340104007
16. D. Valieva, S. Yunusov, N. Tursunov, E3S Web of Conferences **401,** 05017 (2023) https://doi.org/10.1051/e3sconf/202340105017