Semi-Automatic Child Rescuing BOT in Deep Borewell

R. Nithyaprakash[1*], S.Shankar[1], R.Naveen kumar[2], S. Praveen kumar[1], R. Seenivasa[1], S. Naveen Prasath[1]

[1]Department of Mechatronics Engineering, Kongu Engineering College, Tamilnadu, 638060, India

[2]Department of Mechanical Engineering, Kongu Engineering College, Tamilnadu, 638060, India

*Corresponding author: mtsprakash@gmail.com

ABSTRACT. Rescue operations for people trapped in deep borewells provide a serious problem needing both advanced robotic technology and human expertise. This abstract focuses on the creation of a revolutionary machine-human rescuing robot that is specifically designed to respond to emergencies in deep borewells. the complicated nature of deep borewell rescues, which includes technical challenges, time-sensitive situations, and the requirement for swift and accurate action. It draws attention to the drawbacks of conventional rescue techniques and promotes the creation of a flexible robotic system that can work in tandem with human rescuers. The suggested robot is built as a hybrid system that combines human control with autonomous functionality. To deliver real-time data and visual feedback from the borewell inside, it integrates specialized sensors, cameras, and communication tools. The borewell rescue robot's, structural frame work consists of two cylindrical pipes fastened vertically with the help of T shaped square rod, these cylindrical pipes acts as a holding platform for children hands. Lower end of the pipes are provided with mechanical straps which in turn are actuated by BLCD motors with human rescuers is a crucial component of its functionality. Skilled operators can control the robot's movements in real time thanks to remote operating interfaces and haptic feedback systems. The significance of the robot-human rescue team in deep borewell crises is emphasized in the abstract.

KEYWORDS: Borewell, Rescue operation, Robotic arm, Human-machine colaburation

1. Introduction

Incidents involving deep borewells involve the lives of people, frequently children, who are imprisoned in small places with little access to air, water, or food. The need to preserve lives immediately highlights the need of creating effective rescue techniques that can reduce reaction times and increase success rates. Traditional rescue techniques frequently run into technical difficulties like shaky borewell walls, uncertain geological conditions, and obstacles that make rescue efforts difficult. Creating a specialized machine-human rescue robot that can feint through difficult borewell conditions and make delicate trick to reach the trapped people solves these complex problems. It takes more time to rescue a child from the bore well and to check any kind of irregularities in pipe [1]. Human rescuers who participate in conventional rescue operations may be put in dangerous situations and face psychological and bodily hazards. The initiative seeks to reduce the risk to humans by using a machine-human rescuing robot. Using remote operating interfaces, responders can use their experience. Through the use of advanced robotics, artificial intelligence, and teamwork, the project aims to push the limits of technological innovation [2]. This breakthrough advances the more general field of emergency response and catastrophe management in addition to addressing the immediate problem of borewell rescues. The project's results may influence the creation of proactive measures to prevent borewell mishaps, including enhanced safety requirements for borewell construction and public awareness campaigns. Incidents involving deep borewells don't only happen in one place they happen everywhere [3-5].

The effective creation of a robot that can rescue humans and machines in many socioeconomic and geographic circumstances has the potential to save lives. The idea makes use of both the advantages of people and machines [7-10]. By blending The study shows the potential for human-technology collaboration by combining human decision-making abilities with a robotic system's capacity to negotiate difficult surroundings.

1.1 Rescue Robot

To manoeuvre through confined borewell holes, the robot must be small enough.It should be made to function inside the borewell in muddy, wet conditions [11]. Lidar and ultrasonic sensors are used to map the interior of the borewell.To find the child and determine their status, use cameras and thermal imaging [12]. Design with wheels or tracks for stability and mobility in small places.Manipulators with articulated arms that can handle obstacles and lift kids [13]. Systems for real-time data transmission and dependable remote operation. During the rescue, there will be two-way audio and visual connection for comfort and coordination. Algorithms for machine learning that analyse sensor data and pinpoint the child's position. Using object recognition, separate the child from other objects. fail-safes and an emergency stop button are used to stop mishaps. Systems with redundancy to ensure dependability. autonomously powered by batteries [14]. Batteries with a long life or the capacity to recharge or swap out batteries while operating. rigorous testing in simulations and controlled situations. To use the robot properly, operators and emergency responders must receive training. coordination with authorities, professionals, and rescue organisations to adhere to safety guidelines and rules. To control expectations during a rescue mission, the public should be made aware of the robot's capabilities and limitations.

2. Existing System

There are few other existing systems are existing with varoius mechanisms and autonomous rescuing machine. The section deals with the other similar existing systems related to automatic child rescue in borewells.

2.1 Prosthetic Bore Well Rescue Robot System

The newly developed rotating and stabilising mechanisms for the Physically Based Rendering System (PBRS) are offered for the safe holding of children. The introduction of a safety balloon adds an additional layer of protection and many proximity non-vision sensors are employed to determine a person's health, distance from the ground, ambient temperature, atmospheric pressure, and the presence of any smoky gas. The currently suggested design can handle situations where a youngster is stuck up at the bottom and centre. The safety balloons are introduced inside the borewell underneath or below the child and made to expand, Expanded safety balloon covers the borewell diameter and reduces the possibility of child falling inside the borewell.

An open-loop kinematic chain is created by a prosthetic manipulator's collection of mechanical connections connected by joints. It consists of two round plates, connected links, grippers, shafts, lead screws, and gears. It can slide to one side while rotating 360 degrees to hold the infant. Bevel gears and forks are present in the head portion of the running stabilising mechanism. It is pulled into the hole from the ground by a tripod stand using a conventional rope and pulley. After spotting the person, the manipulator stops and, using a fork stabilising mechanism that was modelled after a lathe machine's three-jaw chuck action, stabilises itself in the hole. The use of Open-loop kinematic chain and fork stabilisation is not implemented in our project as there is no need for positioning mechanism, because the bot consist of video camera with light setup and proximity sensor for positioning.

2.2 Borewell Child Rescue System Using 4 Jaw Chuck Mechanism

In order to give the best approach to save lives, this project includes the capability for the inclusion of multiple rescue techniques. we want to combine different rescue techniques, some of which are already in use. The design system can be adjusted to fit bore wells with diameters ranging from 8 inches to 12 inches. A camera, lighting, oxygen source, balloon technology, and umbrella technique make up the system. The depth, position, and state of the youngster are all kept track of via sensors and a camera. The robot is then instructed to select the best rescue strategy. It assists in keeping the child from re-entering the depths. The infant is raised on a balloon cushion that has been inflated. To prevent further bruising, the kid is raised into a rescue bag. Following that, the youngster is safely raised with the entire robot assembly. In this project, the 4 jar mechanism can't be used for delicate and precise holding of child's hand which can be overcome by the mechanical straps that we are using in our project.

2.3 Child Rescue System From Open Bore-Well Using Mechanical Clipper

Here, the clipper, which picks up and places the youngster with the aid of a remote controller, must save the child who is trapped inside the hole. The rope fastened at the clipper's hands allows it to be left inside manually. There won't be any need to dig a hole parallel to the bore well in this alternative situation. It also has a camera that is attached to the clipper and used to watch the youngster. We can see the infant and their condition thanks to this camera. This project has a temperature sensor and a gas sensor that are used to measure the temperature around the child and detect the presence of any dangerous gases. The display shows the temperature and those gases. At step 1, we check to see if the youngster is in a secure environment. The pick-and-place arm clipper that is used to remove the child from the hole is manually moved using the rope. Clipper is based on the mechanical grippers used in pick and place robots for holding the child and when the clipper gets within the range of the child it gets actuated . The kit also has a camera so that we can see the child and their condition in pictures. The mechanical clipper lacks the ability to hold the hand of child in the same position for long duration which can be overcome using cylindrical pipes in this project and this reduces the possibility of slippage .

3. Proposed Solution

We are going to make a framework which is provided with hand holding device and surveillance system to know the current state of the survivor. The suggested human rescue bot for deep borewells is a sturdy, versatile, remotely controlled apparatus with features designed to meet the particular difficulties associated with borewell rescues. It makes use of specialized instruments for victim extraction and debris clearance, cameras for real-time situational awareness, and precision sensors for tracking location. By lowering human danger, functioning around-the-clock, improving accuracy, and streamlining data collecting and communication, this bot solves obstacles. Its versatility guarantees effective navigation in a range of borewell diameters. It increases safety and reduces rescue time by fusing technology and human experience, which eventually raises the likelihood of a successful borewell rescue. The bot uses servo motor for a precise and accurate actuation of the mechanical straps to hold the hands of the child. Non-metal detector is used to detect whether the child hand is placed inside the holder and the signal will be actuating the servo motors to tight the mechanical straps with the child hand. We can provide oxygen supply and camera surveillance in our bot to monitor and safe guard child. The project's numerous charges, such as the costs of research and development, design and engineering, materials, manufacturing, and fabrication, labour expenses and assembly, operational and upkeep expenses. Compared to the market demand and potential advantages, compare the predicted costs. The scope and goals of the project, such as creating a device that can safely rescue people from deep borewells.

3.1 Need of Automation

There are nearly 80 children are accidently falls into the borewells in India and the rescue teams are also unable to rescue the child and over 70% of operations are also failed during the operations. So, the main focus is to save the child's life. The goal of our project is to rescue the child semi-automatically at any depth into the borewell.

3.2 Advantages

The controlling operations of semi-automatic child rescuing bot is to be easy and simple. The bot can automatically lock the child's hand. So, we can easily save the child's life. At the same time, this bot can control and efficient usage of resources and it can be used in longer time and in efficient way.

4. Methodology

Designing and creating by understanding the particular demands and difficulties of borewell rescues, such as depth, diameter, and potential barriers. Create a sturdy, water-resistant chassis with sensors (lidar, cameras, temperature, and gas sensors) installed for data gathering and navigation. Use a dependable communication technology (like RF or satellite) to transmit data and enable remote control. Utilise machine learning algorithms to analyse sensor data to locate the child, identify hazards, and determine the bot's safest route. Give the bot the ability to navigate confined borewells and perform rescue missions, possibly with the use of robotic arms. Integrate redundant systems, fail-safes, and emergency stop mechanisms to guard against mishaps and provide human monitoring. To improve the performance and safety standards of the bot, run comprehensive field experiments and simulations. Work together with authorities, rescue organisations, and experts to follow rules and industry standards. Promote understanding of the bot's capabilities and constraints to ensure efficient use in emergency situations. Update the bot's hardware and software frequently based on practical experience and new technological developments.

4.1 Child Rescuing Bot In Deep Borewell

Figure 1 depicts the built robot in isometric view of the actual rescuing bot.

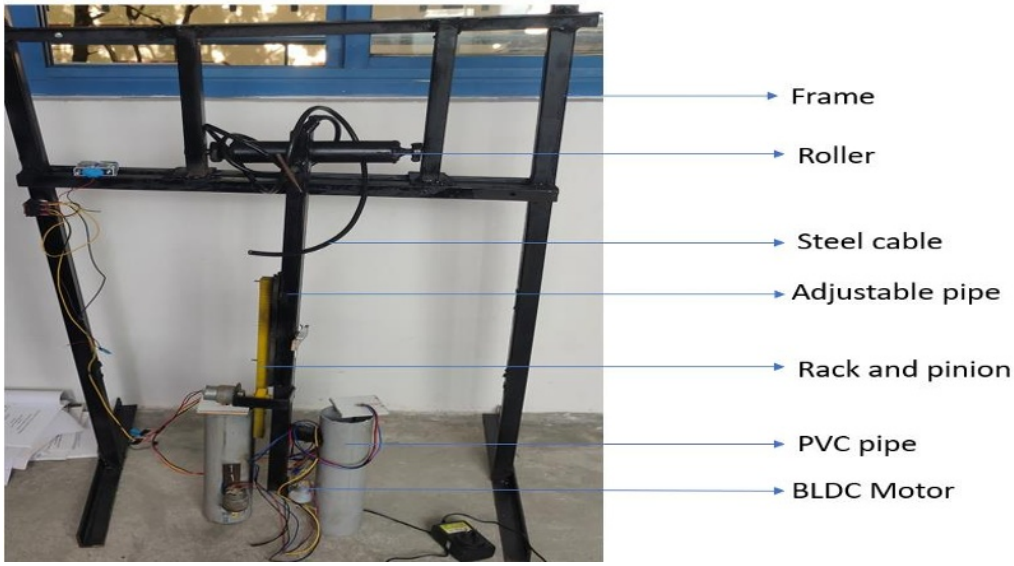

Fig.1 Child rescuing bot

4.2 Mechanism Of The System

The workflow of the system consists of six stages of the process. Figure 2 shows the process, designing and creating by understanding the particular demands and difficulties of borewell rescues, such as depth, diameter, and potential barriers. Create a sturdy, water-resistant chassis with sensors (lidar, cameras, temperature, and gas sensors) installed for data gathering and navigation. Use a dependable communication technology (like RF or satellite) to transmit data and enable remote control. Utilize machine learning algorithms to analyze sensor data to locate the child, identify hazards, and determine the bot's safest route. Give the bot the ability to navigate confined borewells and perform rescue missions, possibly with the use of robotic arms. Integrate redundant systems, fail-safes, and emergency stop mechanisms to guard against mishaps and provide human monitoring. To improve the performance and safety standards of the bot, run comprehensive field experiments and simulations. Work together with authorities, rescue organizations, and experts to follow rules and industry standards. Promote understanding of the bot's capabilities and constraints to ensure efficient use in emergency situations. Update the bot's hardware and software frequently based on practical experience and new technological developments.

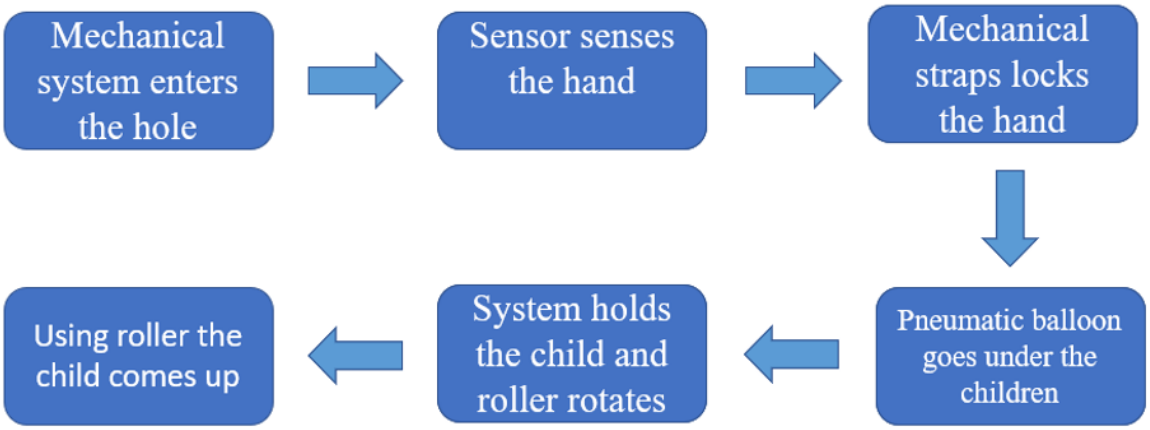

Fig.2 Flowchart for working of automatic child rescue system

4.3 CAD Modelling

The design phase is the most crucial for any product. SolidWorks software was used to design this machine. The part drawings are initially created to the desired dimensions, and the parts are subsequently assembled. 3D model child rescue bot in deep borewells are shown in Fig. 3. SolidWorks' simplicity of use as a work environment is the primary factor in choosing it over AutoCAD. The motors' step-by-step actuation is shown in vivid detail. Every product has a design phase, which is its most important stage. Utilizing the software SolidWorks, this machine was created. SolidWorks were chosen over AutoCAD because of the issues with the latter's working environment. AutoCAD is the simpler tool to use if a total beginner was to compare the two, and after gaining a basic understanding of 2D drafting, the user might advance to 3D modelling and more complicated designs that would contain several parts, assemblies, and animations.

Fig. 3 3D model of child rescue bot

4.4 Electrical Section

The robot's main source of propulsion is a Brushless Direct Current (BLDC) motor, because of its many benefits such as their superior efficiency, extended lifespan, low maintenance needs, and accurate speed and position control BLDC motors are favored for a variety of applications. It offers the torque and speed control required to manoeuvre through the narrow passages of the borewell, enabling the bot to move swiftly in the direction of the youngster or away from any hazards. The Node MCU acts as the main controller, controlling communication, motor control, and sensor inputs. Real-time monitoring and control are made possible by the processing of data from numerous sensors and communication with the operator or a remote control station. For obstacle identification and avoidance, IR sensors are utilised. Because they can detect and measure infrared light, infrared sensors are essential in many applications. Infrared radiation, or heat, is what IR sensors pick up when an object emits or reflects heat. Their multifaceted applications stem from their capacity to detect changes in temperature, motion, and closeness. In order to detect neighbouring objects or impediments inside the borewell and ensure the robot can traverse safely, they emit infrared light and assess its reflection. For determining the distances between objects nearby, ultrasonic sensors are necessary. They aid a robot that is rescuing a trapped child in determining its distance from the youngster and avoiding collisions with the borewell walls or other objects. For pinpointing the child's presence and exact location inside the borewell, proximity sensors are essential. When the child is found nearby, they instruct the bot to start the rescue operation. Together, these electrical parts help the kid-rescuing robot explore, find, and securely rescue a trapped child. The robot can carry out rescue operations in difficult borewell situations thanks to the integration of sensor, motor control, and microprocessor technology. The electrical section shows in Figure 4.

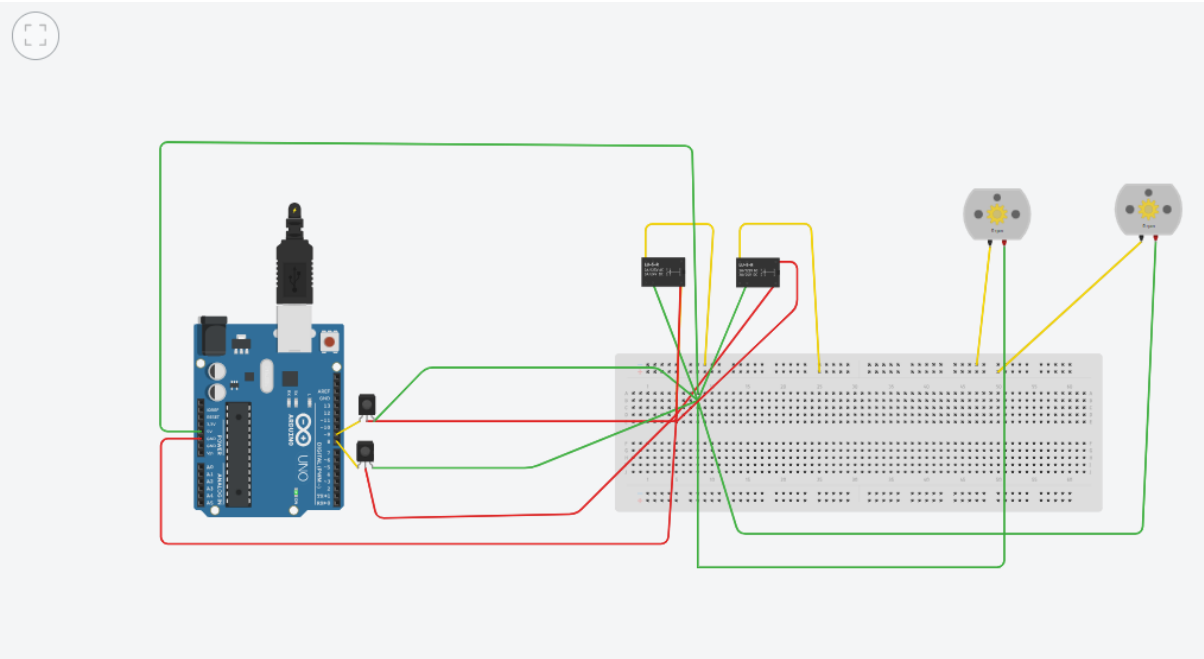

Fig.4 Electrical section

5.Design Specification

Compact proportions with tracked or wheeled movement for stability in tight borewells. Propulsion is provided by a BLDC motor that is driven by a robust battery. The BLDC motor works at 12V that is simple to replace or recharge. For centralised management, motor control, communication, and sensor data coordination, use a node MCU. Node MCU model is Esp 8266 Sensors for obstacle detection, child location, and safety that use IR, ultrasonic, and proximity technology. The proximity sensor works at 5V DC power supply. For lifting children, a slider with a rack and pinion system supports mechanical straps and a steel wire rope. PVC pipe casing and a strong design ensure durability in difficult borewell conditions. These features ensure the robot's efficiency in borewell rescue operations by allowing it to move swiftly, identify obstructions, find the child, and carry out a safe extraction.

6.Conclusion

The concept has been designed with the help of existing semi-automatic rescuing system. This project is specialists from a variety of domains, including robotics, mechanical engineering, electronics, and materials science joined forces to develop a comprehensive solution, the project served as a showcase for the value of multidisciplinary teamwork. The machine's ability to adapt to shifting conditions throughout the rescue operation was further illustrated by the incorporation of remote control systems and real-time communication tools. While the machine is a significant advancement, it's crucial to recognize that there are still problems. In order to increase its effectiveness, responsive, and adaptability to various borewell conditions, ongoing research and development is required. The study also brought up moral questions regarding the use of robots in life-or-death situations, calling for careful consideration and adherence to rules. Last but not least, this effort demonstrates the amazing potential of technology to reduce dangers and save lives under trying conditions.

REFERENCES

1. Vyavahare, V. A., Popalghat, P. P., Kurumkar, A. S., Nagawade, R. J., Divekar, S. N., & Patil, V. N. (2020). Borewell Rescue Robot Using Bluetooth.
2. Madhukara, S., & Vidyashree, M. Child rescue system.
3. Dumbre, S., Jadhav, Y., Mahajan, S., & Sorte, M. (2021). Design and Fabrication Semi-autonomous Search and Rescue Robot using Rocker Bogie Mechanism. International Journal of Mechanical Dynamics & Analysis, 7(2), 34-38.
4. Nosirov, K. K., Shakhobiddinov, A. S., Arabboev, M., Begmatov, S., & Togaev, O. T. (2020). Specially designed multi-functional search and rescue robot. Bulletin of TUIT: Management and Communication Technologies, 2(1), 1-5.
5. Shilpa, N. Examining the Main Elements of Electric Vehicle Mobility. Journal homepage: www. ijrpr. com ISSN, 2582, 7421.
6. Sampathkumar, D., Naveen, N., Hallaj, M. S., & Sudharson, S. R. Borewell Child Rescue Machine.
7. Nosirov, K. K., Shakhobiddinov, A. S., Arabboev, M., Begmatov, S., & Togaev, O. T. (2020). Specially designed multi-functional search and rescue robot. Bulletin of TUIT: Management and Communication Technologies, 2(1), 1-5.
8. Seetharama, K. S., BN, M. S., Yaji, M. G., & Kamble, M. S. (2020). Design of Rescue Robot Gripper. Journals of Mechatronics Machine Design and Manufacturing (e-ISSN: 2582-8908), 2(2), 11-17.
9. Bhagat, A., Racharla, R., Rane, S., Khanjode, K., & Wagh, S. (2020). Automatic Rescue Machine for Agricultural/Field Bore Well. International Journal of Mechanical Dynamics & Analysis, 6(1), 46-50.
10. Zheng, Y., Wu, Z., & Ma, C. (2023). Structural Optimization of Small-Diameter Deep Well Rescue Robot based on Hyperworks-Optistruct. Manufacturing Technology, 22(6), 771-776.
11. Arunkumar, K., Kumaran, T., Sravanthi, G., & Vijayanandh, R. (2022, November). Design and fabrication of semi-automatic child retraction mechanism from bore well. In AIP Conference Proceedings (Vol. 2446, No. 1). AIP Publishing.
12. Tejaswitha, C., & Mallikarjuna, M. V. Design and Fabrication of a Robot to Rescue a Child in a Bore Hole.
13. Prasad, S. N., & Balaji, K. (2021). Smart and safe child rescue system. New arch-international journal of contemporary architecture, 8(1s), 287-290.
14. Sui, D., Wang, T., Zhao, S., Zhang, X., Zhao, J., & Zhu, Y. (2021). An enveloping soft gripper with high-load carrying capacity: design, characterization and application. IEEE Robotics and Automation Letters, 7(1), 373-380.