Dry containment

Boris Pergamenschik[1]

Moscow State University of Civil Engineering, 26, Yaroslavskoye shosse, Moscow, 129337, Russia

Abstract. The dry containment (DC) is a metal cylindrical vessel (tank) 0.6 m thick, 5 m high, which is filled with serpentine concrete and surrounds the reactor vessel. DC reduces the radiation flux to the conventional concrete of the biological shield of the PWR reactor. Generates, due to the high content of hydrogen atoms in serpentine rock, a radiation spectrum with an increased content of thermal neutrons, which is important for the operation of the ionization chambers of the reactor power control system. Traditionally, the DC is dried after concreting the metal structure at a temperature of up to 2500 °C to remove water from the concrete that is not chemically bound during the hardening process. The drying operation is not fixed by the standard instruction, it is solved according to various schemes and is associated with a long preparatory period, significant labor and financial costs. There is no evidence of the need for drying. In the present paper, based on the analysis of the DC solution, a number of projects of works on its construction, existing instructions, the conclusion is made about the possibility and expediency of refusal from drying of DC and accompanying operations on quality control with the use of radioisotope sources. The corresponding cost savings are estimated at more than 100 million rubles for the power unit.

1 Introduction

The term dry containment appeared in the special literature in the early 90s in relation to the protection of the PWR reactor and denoted a cylindrical thick-walled structure of serpentine concrete surrounding the reactor vessel [1]. The term dry emphasized the absence of water in the primary layer of protection, which was characteristic of the solutions of many domestic and foreign nuclear power plants. Structurally, this layer was designed as a cylindrical steel multi-section tank filled with water (Fig. 1) [2]. Water protection reduced the flux of radiation to the subsequent biological shield made of conventional concrete, excluding its radiation damage and heating. Reliable information on the durability of concrete under irradiation for a long time was absent.

[1] Corresponding author: PergamenchikBK@mgsu.ru

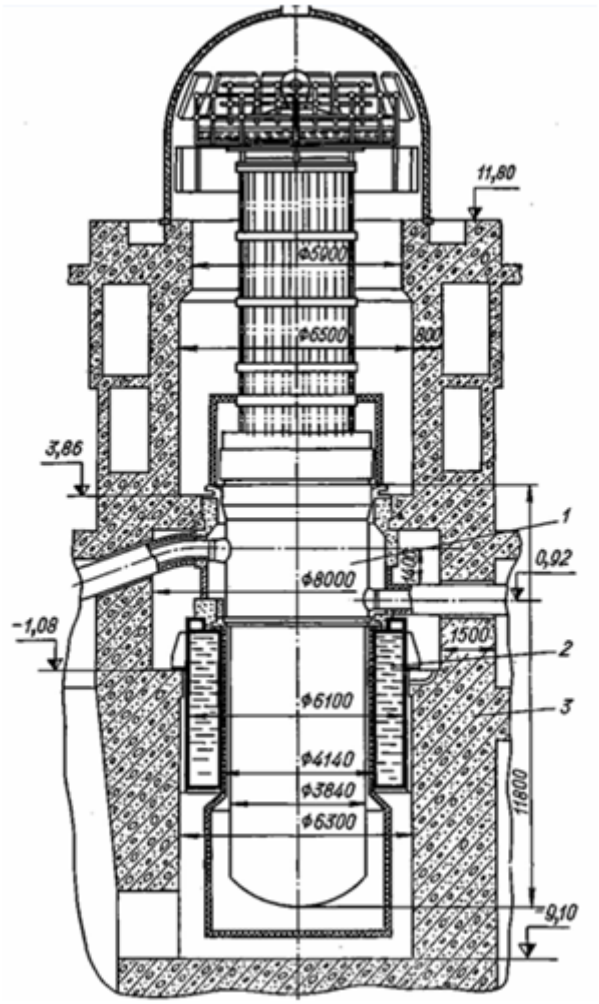

Fig. 1. VVER-440 reactor protection scheme. 1 – reactor vessel, 2 – reactor protection – metal water tank, 3 – reactor protection – ordinary concrete.

In addition, a significant amount of light nuclei – hydrogen in the water contributed to the effective reduction of neutron energy, the formation of a relatively large proportion of low-energy, thermal neutrons in the radiation spectrum. The latter are fixed by ionization chambers, which were located in the channels inside the tanks, giving information about the reactor power, that is, performing the most important function in the reactor control and protection system. There are other power recorders, however, among other things, ionization chambers are still used today.

The solution with water tanks ("wet" protection) from the construction and technological positions is quite simple. Factory-made tanks, thorough quality control, minimal labor costs for installation, but there are also disadvantages:

- the risk of leakage, including due to metal corrosion, with the extreme complexity of the organization of repair work;

- necessity to maintain required water-chemical regime of water in tanks, control arrangement;
- formation of hydrogen as a result of radiolysis of water, the need to drain the gas substance from the tanks and its disposal;
- the need to replenish water losses in tanks and a number of others.

The desire to replace the "wet" protection with a dry one was associated with the search for a material with good protective characteristics, a relatively high content of light nuclei, primarily hydrogen, as well as resistance (stability of composition and properties) under conditions of prolonged exposure to reactor radiation.

Long-term studies led to the decision to use serpentine concrete – concrete in the preparation of which the serpentine rock is used as an aggregate – as the primary layer of protection, instead of water. The basis of serpentine rock is the mineral serpentine ($3MgO\ 2SiO_2\ 2H_2O$), the content of chemically bound water in which is about 12%. Serpentine-based concrete has high radiation and temperature resistance. The characteristics of serpentine change little when heated to 400-450 °C, as does the chemical composition at neutron fluence to $1.7 \cdot 10^{21}$ neutrons/cm^2 [3-5]. Serpentine rock is not common, but the relatively small volume of concrete in the reactor protection makes it possible to especially ignore transportation costs. The main solutions of the DC are based on the inventions of MGSU (formerly MISI named after V.V. Kuibyshev) and JSC OKB Gidropress [6, 7].

Modern dry containment (DC), as before "wet", is a cylindrical tank or housing (the latter term is used in the project) made of sheet steel with an inner diameter of 5.6 m, an outer diameter of 6.7 m and a height of 5.3 m, filled with serpentine concrete. The weight of the metal is about 30 tons, the volume of concrete is 48.5m^3. DC metal structure is divided into two buildings – lower and upper, respectively, 2.2 m and 3.1 m high, which are combined after concreting into a single mounting block. Each housing is divided by vertical partitions into 15 identical sections. The sections are provided with horizontal partitions with openings for the supply and placement of concrete mix. The tanks and partitions are made of 10 mm thick sheet steel. Two metal pipes with a diameter of 170 mm pass through the sections vertically, which are connected by welding with other elements of the tank. The pipes are designed to accommodate ionization chambers (Figs. 2-4).

a

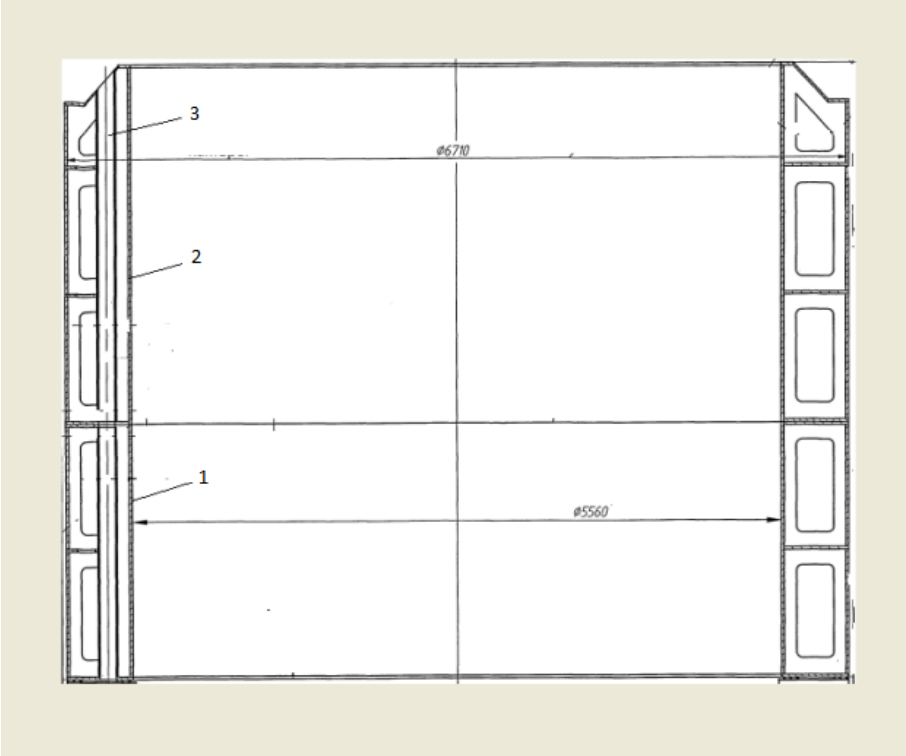

b

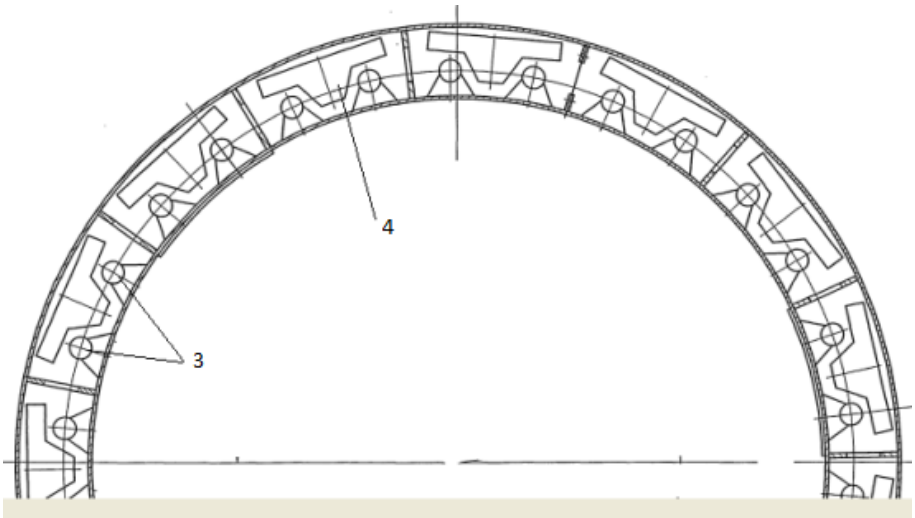

c

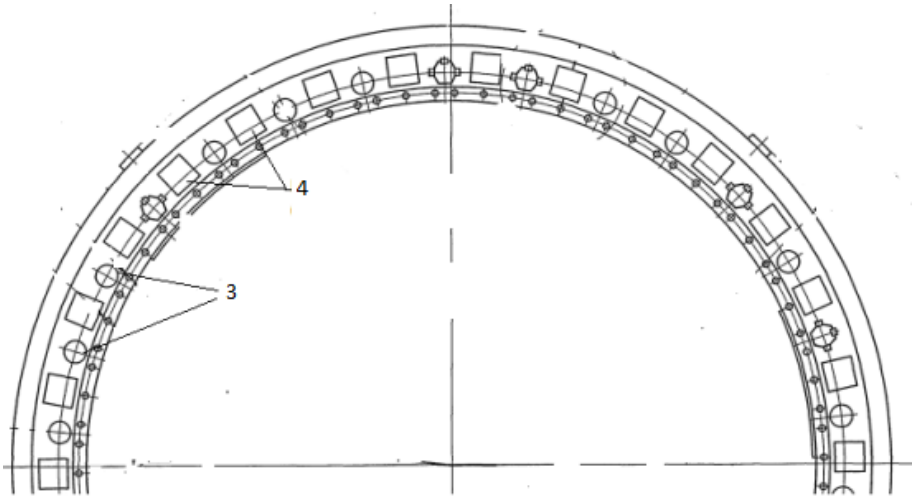

Fig. 2. VVER-1000 reactor dry containment metal structure: a – section, b – lower housing (plan fragment), c – upper housing (plan fragment). 1 – lower housing, 2 – upper housing, 3 – channels for ionization chambers, 4 – opening for concrete mix supply.

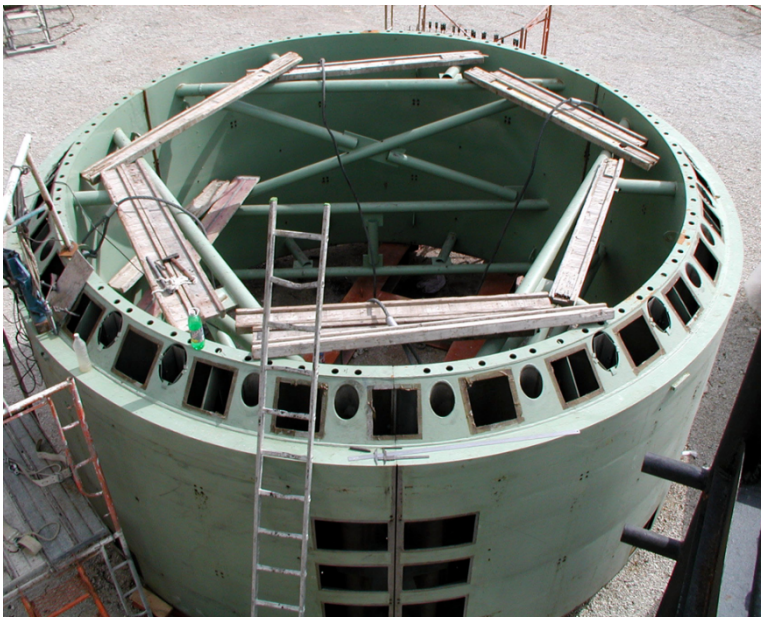

Fig. 3. Metal structure of the upper housing during assembly.

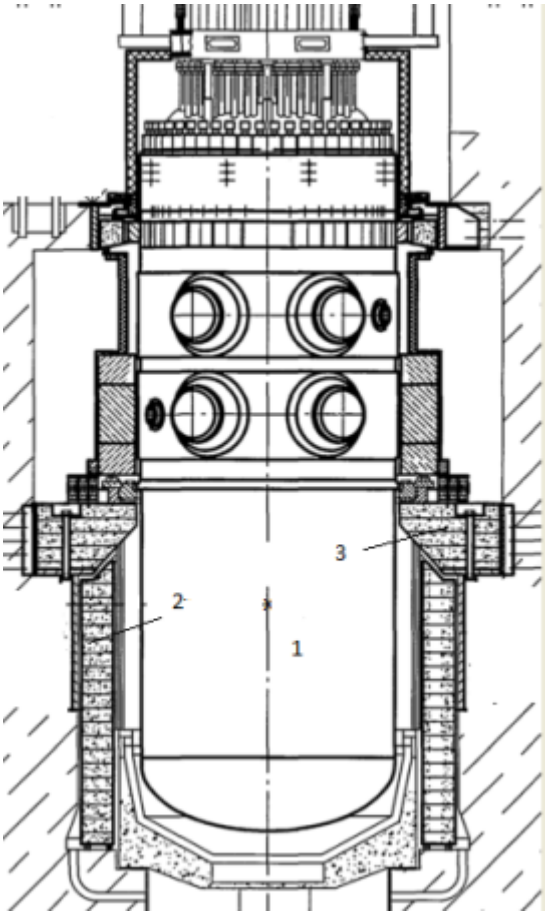

Fig. 4. VVER-1000 reactor protection scheme. 1 – reactor vessel, 2 – dry containment, 3 – support truss.

The cooling of the DC is carried out by the air of the ventilation system, passing from the bottom up along the annular gaps separating the DC on the one hand from the thermal insulation of the reactor vessel, and on the other hand from the concrete of biological shield. Part of the air passes through the IC channels. The total air flow rate is several tens of thousands of m^3/h. The design air temperature at the inlet-outlet of the gaps is not more than 40-60 °C,

It seemed that everything was clear with the technology of erecting the DC. Receive metal structures of the DC from the manufacturer, assemble the lower and upper casings, prepare a serpentine concrete mixture, fill the internal cavities of the housings with the mixture, after gaining strength, unite the casings into a single assembly unit of the DC and lower this unit using a construction and installation crane to the regular place in the reactor cavity. Further work on building up the mine, installation of the supporting truss on which the reactor rests, etc. However, “the devil is in the details”.

1.1 Objective of the research

Analysis of the validity of the use of existing regulatory documents, work execution plans for the dry containment of the NPP with a PWR reactor.

2 Materials and methods

The responsibility for the metal structure, however, as well as for the entire DC (reactor shaft equipment element) lies with JSC OKB GIDROPRESS, but there is also concrete – selection of the composition, preparation of the mixture, transportation, supply, laying and compaction in the structure. And these are purely construction and technological functions. In the installation drawing of dry containment, only the bulk weight of the concrete mix is specified – 2320 kg/m^3 and it is indicated that a separate work execution plan (WEP) for the preparation, placement and heat treatment (drying) of serpentine concrete should be developed. The preparation and placement is clear. During the construction of nuclear power plants, dozens of WEPs are being developed, including for particularly complex works, taking into account the features of the structure, its location, the availability of necessary equipment and other things. But there are questions related to a special type of work – with pre-installation heat treatment (drying) of serpentine concrete. It is necessary to develop an additional WEP for drying or the corresponding section of the main WEP.

And that is where the "spacer" comes in—another document that, in a way, ties the metalwork and concrete together. This is the instruction "Preparation and laying of serpentine and iron-serpentine concrete in the biological shield structure", developed by another organization (hereinafter referred to as the Instruction).

It is important to provide excerpts from some of the requirements and recommendations of the Instruction:

1. The recommended compositions of serpentine concrete, the characteristics of serpentine rock are given for the rock from the raw materials of the Bazhenov deposit, supplied according to TU 95.6112-76 by the Uralasbest plant (section 1 of the Instruction).
2. The composition of concrete, the volume mass, the need for preliminary drying and its mode are established by the **project**, taking into account the provisions of the Instruction (section 2.2 of the Instruction).
3. Preparation of concrete mix, hardening during the first 7 days and subsequent storage – at a temperature of 15-30 °C (paragraph 2.5 of the Instruction).
4. The composition of the mixture with a volumetric mass of 2320 kg/m^3, with crushed stone of 5-20 mm, with a strength of at least 10 MPa at a 28-day age is recommended. For structures with complex internal configuration, a serpentine mortar with a density of 1950 kg/m^3 is recommended (section 4.1 of the Instructions).
5. If the operating temperature exceeds 80 °C, holes should be made in the walls of the metal structure for the outlet of the mixing water vapors (section 6.3.5 of the Instruction).
6. The need and mode of drying is determined by the protection design (clause 7.1).
7. For accelerated and complete removal of mixing water from concrete, a drying mode with a maximum temperature of up to 300 -350 °C is recommended (paragraph 7.4).
8. It is also possible to dry at any temperature above 100 °C to a constant mass, if there is no need for complete removal of the mixing water according to the operating conditions. Determination of mass losses during the drying process is carried out by periodically weighing a predetermined control structure. Drying can be completed if the last three weighings with an interval of 6(12) h give the same result (clause 7.6 of the Instruction).
9. For drying large blocks, thermal sources are determined by the protection design. If the capacity of the heaters is insufficient, drying can be carried out at any temperature above 100 °C, controlling it in the least heated areas of concrete. The duration of drying in

this case, after heating the entire massif of concrete for at least 7 days (paragraph 7.9 of the Instruction).

Note that there is not a word about the DC in the Instruction. In addition, there is no protection project in relation to the DC. There are only drawings of the steel structure and the requirement for the density of the concrete mix is 2320 kg/m^3. There is no data on operating conditions in normal mode and in case of its violations. The subcontractor involved by the plant management to develop a work execution plan for the arrangement of DC (essentially a protection project) is forced to rely only on the Instruction. We repeat that there is not a word about the DC in the Instruction.

In a number of decisions, apparently, the designers were guided by the proverb "you can't spoil the porridge with butter", or, as my manager said many, many years ago: "By calculation, rebars are with a diameter of 16 mm in increments of 250 mm? We will put 20 mm in increments of 200 mm and sleep peacefully".

As a result, in our opinion, some redundancy of the solutions prescribed by the WEP for the construction of the DC, especially in terms of drying. The ability to select almost any heat source (paragraph 7.9 of the Instructions) leads to a wide variety of implemented technology options. Let us highlight some of them:

1. Drying in chambers where the product is put as a whole: the thermal chamber of the Energomash enterprise in Volgodonsk (Rostov NPP); a 2.4 MW thermal furnace of Energotex JSC in the Kursk region (Kursk NPP-2).

2. Drying in specially designed and erected buildings-warmers using heating elements or individually designed ring electric furnace (Leningrad NPP-2, Novovoronezh NPP-2, BelNPP), Fig. 5.

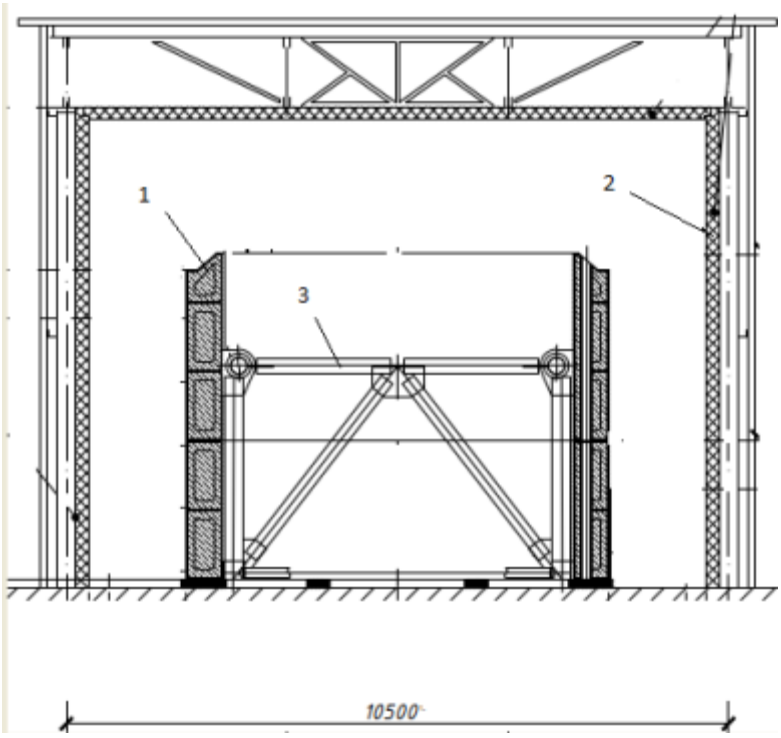

Fig. 5. The winter shelter building (10.5x12.0 m in the plan) for concreting and subsequent drying of dry containment. 1 – dry containment, 2 – thermal insulation of the building, 3 – mounting spacer.

3. Drying using rod electric heaters – reinforcing bars placed in the steel structure of the DC before concreting. Work in a winter shelter building. In a favorable climate – light enclosing structures (Tianwan NPP, Bushehr NPP).
4. Other technologies.

The decision on the need for drying is laid down in the protection project (according to the terminology of the Instruction), or rather in the WEP for the construction of the DC with the development of all the necessary infrastructure. Special sections on the construction of a winter shelter building, transportation of the DC to the place of drying (if necessary), on the technology of heat treatment, etc. The maximum temperature in the implemented solutions was taken, as a rule, above 200-250 °C. The project is individual for each NPP and is agreed with JSC OKB GIDROPRESS.

Preparation and implementation of the drying project is associated with a large preparatory period (up to 4-5 months), the main period (up to 40 days), significant labor and financial costs (usually not less than 100 million rubles). The occurrence of force majeure, due to the failure of any systems or doubts in the quality of drying, should lead to the postponement of the installation date of the DC and, as a result, an increase in the duration of the construction of the NPP unit. And this is already an emergency!

3 Results and discussion

A legitimate question arises – is drying even necessary?

The temperature in the serpentine concrete of the DC in the normal operation mode does not exceed 50 °C, and in the mode with a violation of the heat removal from under the shell with the ventilation in operation – no more than 60 °C (it makes no sense to consider the case of a severe accident). No drying required. There is also no need to make hundreds of holes in the shells of metal housings for the release of water vapor (see above – paragraph 6.3.5 of the Instruction).

Another bug is the danger of hydrogen formation in serpentine concrete under the influence of reactor irradiation. The fears are groundless, since the intensity of hydrogen formation in the entire volume of DC (in water bound with cement stone and in free water) does not exceed $5x10^{-4}$ m^3/h. With the intensity of DC cooling by air, the concentration of hydrogen in the air is many orders of magnitude lower than the dangerous value of 4% [8].

Failure to dry will not affect the function of serpentine concrete in the reactor control and protection system, or the operation of ionization chambers. Moreover, it will be possible to consider replacing serpentine concrete with conventional concrete. In this case, the total amount of water in the concrete will be 10% (by weight), and chemically bound – more than 3%. Apparently, it is quite enough, if we assume that the sensitivity of ionization chambers has increased significantly over the past 40 years. The requirement related to the ability to use only Ural serpentine rock will also disappear.

A few words about the problems in the process of drying at modern power units, following the guidance of the Instruction to which the project refers (WEP): in many cases, the requirement to maintain a temperature of more than 100 °C in the least heated places is not observed; determining the drying duration by periodically weighing control samples leads to errors, since the speed of thermodiffusion processes in samples (cubes with an edge of 100-300 mm) and in the DC are fundamentally different.

And a little more about the composition and preparation of serpentine concrete, which is given a lot of attention in the Instruction and WEP. However, nowhere is there a word that the concrete in the DC is not structural. Essentially, it is ballast, packing of metal housings.

It would be possible to simply pour a selected mixture of serpentine rock crushed stone and sand (gully) into the housings, although there are problems here.

So far, the requirement for the content of light nuclei and water in the DC remains relevant. The density of serpentine concrete recommended by the Instruction and WEP is 2320 kg/m^3, with a rock content of about 1600 kg/m^3. It would be reasonable to limit ourselves to this, and only to this requirement for the content of serpentine aggregates in concrete.

It would not be necessary for the DC to be attached only to the Ural serpentine rock. The main drawback of Ural rock is asbestos. Serpentine rock is essentially a dumping rock. When transporting this aggregate over long distances and transshipment operations, the asbestos content may exceed the permissible values. In the process of concrete mix preparation, its viscosity increases. There are problems when laying, especially in geometrically complex structures. It can be noted that local serpentine rock was used in the construction of Tianwan NPP power units in China.

On quality control of concreting and drying. Until recently, this is a mandatory procedure after placing concrete in the metal structure and after completing drying. Recently, at some NPP units, in agreement with JSC OKB GIDROPRESS, control is carried out only after drying. Control is carried out using a radioisotope device, a neutron moisture meter (neutron profiling). The cost in today's prices is about 30 million rubles. The need is more than doubtful. The operation seems far-fetched and not justified in any way.

The use of a highly mobile concrete mix, drilling holes for air outlet in problem areas, makes it possible to almost completely eliminate unconcrete zones. Even if we imagine a cavity with a volume of 8-10 cm^3, its impact on the functionality of the DC will not affect in any way. Our proposed improvement of the metal structure with the exclusion of internal horizontal ribs, replacing them with Nelson anchors, practically eliminates the formation of internal voids.

Quality control of drying with the modern design of the DC is meaningless at all. To some extent, it was justified for the DC of the V-320 project, when it was assembled from 10 segment blocks, which were individually concreted and dried (Fig. 6).

Fig. 6. Protection units of dry NPP with VVER-1000 reactor (design of reactor plant V-320).

4 Conclusion

The DC solutions related to the drying of serpentine concrete laid down in the WEP and implemented in practice do not have any convincing justification. Drying and the associated

quality control operation using a radioisotope device appear to be superfluous. The corresponding cost savings will be more than 100 million rubles for the power unit. The danger of increasing the duration of construction due to delays at this stage is eliminated, which is very likely.

References

1. G.I. Zholdak, MISI Bul. **146**, 16-22 (1977)
2. Fundamentals of radiation safety of nuclear power plants – protection of reactor vessels. Accessed on: September 19, 2023. [Online]. Available: //https://leg.co.ua/arhiv/generaciya/osnovy-radiacionnoy-bezopasnosti-atomnyh-elektrostanciy-18.html
3. V.B. Dubrovsky, Sh.Sh. Ibragimov, M.Ya. Kulakovsky, A.Ya. Ladygin, B.K. Pergamenshchik, Nucl. En. **25(6)** (1968)
4. V.B. Dubrovsky, Sh.Sh. Ibragimov, B.K. Pergamenshchik, Radiation resistance of some protective materials, in Questions of physics of reactor protection, **3**, 37-41 (Atomizdat, Moscow, 1969)
5. I.A. Arshinov, G.A. Vasiliev, Yu.A. Egorov et al., Serpentine rock in the protection of nuclear reactors (Atomizdat, Moscow, 1972)
6. G.I. Zholdak, Yu.V. Vikhorev, V.B. Dubrovsky, M.A. Lukyanov, B.K. Pergamenshchik, N.A. Kirilyuk, V.I. Tsofin, L.E. Shebanova, Shaft of a nuclear power reactor, SU No.553908, 13.12.1976
7. G.I. Zholdak, V.N. Ivanov, V.B. Dubrovsky, Yu.P. Kaloshin, Yu.V. Vikhorev, N.A. Kirilyuk, L.E. Shebanova, M.A. Lukyanov, V.I. Tsofin, V.A. Dorokhin, V.A. Grigoriev, L.N. Rukhmanov, Shaft of the nuclear reactor vessel, SU No.728429, 21.12.1979
8. S.M. Zaritsky, A.L. Egorov, S.A. Kabakchi, V.A. Dorf, B.K. Pergamenshchik, Iss. Atom. Sci. Tech. Ser. Phys. Nucl. React. **3**, 10-17 (2021)