Study of the traction converter control system of the uzelr series of electric locomotives

D.O. Rajibayev[1*], *A.M.* Miryakubov[1], and *A.A.* Mavlanov[1]

[1]Tashkent state transport university, Temiriyulchilar str. 1, 100167, Tashkent, Uzbekistan

Abstract. This article reviews the technical characteristics of the UZELR series semiconductor traction converters for electric locomotives, manufactured in China and widely used by Uzbekistan Railways JSC "Uzbekiston temir yullari", develops a model describing the working principle of the PWMI, and presents the conclusions of the analysis. Key words: electric locomotive, microprocessor, semiconductor converter, PWMI, inverter, transport

1 Introduction

Nowadays, Uzbekistan is strengthening its economy through the export of some goods to foreign countries and the increase in the transit flow of goods. At this point we can note the indispensability of the development of transport infrastructure in the country. The most optimal and widespread mode of cargo transport in Uzbekistan is railway transport. In order to improve the transport process, one of the most important tasks is the modernisation of the locomotive fleet [1]. Thus, for the third time in a row, electric locomotives manufactured by Dalian Locomotive Plant are preferred for freight transport.

The 21st century is the age of digital development. And during this period, the railway infrastructure is undergoing many structural and digital changes. One of the most striking examples is the worldwide use of semiconductor-based microprocessor control systems for electric locomotives. Developed countries such as China, France, Spain, Germany, etc. are advanced manufacturers of such systems. In order to renew the locomotive fleet and increase the traction power of rail transport in Uzbekistan, JSC "Uzbekistan Temir Yullari" closely cooperates with companies from the PRC and buys from them electric locomotives on asynchronous traction motors with the above-mentioned control system. The latest version used on the railways of JSC "Uzbekistan Temir Yullari" is a two-section version of the electric locomotive of the UZELR series (SKE2). In this article the control system of electric locomotives of this series will be considered.

In modern electric locomotives, the control system is used to control the electric locomotive itself and the entire rolling stock in all climatic and terrain conditions on the railway.

* Corresponding author: davronmail@bk.ru

2 History of the plant

Dalian Loco Factory was founded in 1899 to coincide with construction of China East Railroad's southern branch.

In 1958, the prototype of the JuLong diesel-electric locomotive was built, based on the Russian TE10 diesel locomotive and the Fairbanks Morse FM38D. with an opposed piston engine, and in 1964 the production of DF class diesel-electric locomotives began [2-9].

By 2000, the company was producing half of China's domestic supply of diesel locomotives and 80% of the locomotives exported to the country.

In the first decade of the 21st century, the plant began producing two new types of mainline locomotives; China Railways HXD3 electric locomotives in partnership with Toshiba, a joint venture with which was formed in 2002 to produce electrical equipment for rolling stock. Also in the 2000s, China Railways HXN3 diesel locomotives were produced in Dalian in partnership with GM EMD [7].

In 2009, the groundbreaking ceremony was held for the new plant in the Lushun Economic Development Zone (Lushunkou District), developed jointly with the Dalian Municipal Government. The plant, which covers an area of 2 km, is designed to produce around 1,000 locomotives, 1,000 rail vehicles and 1,000 diesel engines per year. The plant was officially inaugurated in August 2011. The first machines on the assembly line were passenger coaches for Line 2 of the Tianjin metro.

One of the company's most recent export orders came in January 2015 from the Lagos Metropolitan Area Transportation Authority for 15 metro trains for the Lagos Rail Mass Transit system in Nigeria, with the possibility of 14 more. This order followed the unsuccessful purchase of old H-series cars from Toronto Metro. In the same year, an order was placed for 14 eight-car trains for Line 1 of Calcutta Metro.

3 Description of electric locomotive

The main characteristics of the electric locomotive are presented in the table below 1.

Table 1. The main characteristics of the electric locomotive

Parameter	value
Type of electric locomotive	Mainline, freight and passenger
Axial formula	Co-Co
Axle load	23 t
Locomotive weight	138 t
Minimum radius of the inscription curve	125m
Maximal speed	120 km/h
Nominal speed in continuous mode	70 km/h
Starting tractive force (maximum)	520 kN
Recuperative braking	available
Traction motor type	asynchronous
Length of the locomotive over the centers of couplers	20846 mm
Bogie wheelbase	2250 mm
Overall dimensions	20846×3100×4100mm
Type of traction drive	4QS+PWMI
Manufacturer of traction electrical equipment	Toshiba

As far as the traction circuit is concerned, two main converters are used on the locomotive, marked UM1 and UM2. They are fed by the traction windings (a1-x1) to (a6-x6) of the main transformer.

The UM1 main converter consists of three mutually independent links "rectifier - intermediate DC circuit - voltage inverter". Each traction converter includes the following equipment:

- 2 contactor isolators;
- 1 input current transformer;
- 1 charging resistor;
- 1 four-quadrant rectifier;
- intermediate circuit;
- 1 inverter with pulse width modulation (PWM);
- 2 output current transformers.

The power circuit and the microprocessor control circuit have six independent power lines for each motor. They are relatively independent. Each of the 6 lines is controlled by voltage frequency conversion. Each of the power lines has 6 four-quadrant converters and 6 autonomous voltage inverters with pulse width modulation.

If one or more inverters fail, the faulty traction converter can be shut down by pressing the appropriate touch button on the TCMS computer screen. At the same time, the other traction inverters can continue to operate. The redundant circuit is installed as long as the tractive effort required to move the train is sufficient for the weight of the train.

3.1 Autonomous voltage inverter

This inverter operates on the principle of Pulse Width Modulation (PWM), receiving power from the DC link and outputting a three-phase variable frequency voltage (VVVF) to the traction motor. The PWM-based inverter can realise fast and smooth switching from traction mode to braking mode and vice versa. In regenerative braking mode, energy is fed back into the contact network (Fig. 1) [3].

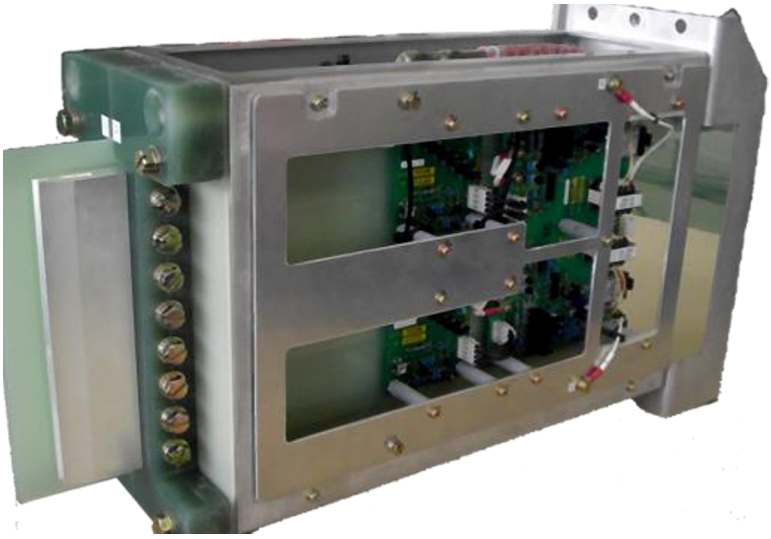

Fig. 1. IGBT module for autonomous voltage inverter.

Six pulse width modulation (PWM)-based inverters each supply six traction motors with electrical power. The inverter (PWM) is based on a modern control principle that ensures minimum torque variation throughout the locomotive's speed range and the ability to achieve maximum tractive effort on the rails with the maximum possible torque. Separate motor

power lines allow relatively independent traction control on each axle. In the event of uneven load distribution due to differences in wheel diameter or other reasons, an inverter can be used to redistribute the load between the six axles to provide the correct load compensation to maximise the locomotive's tractive effort.

Table 2. Technical parameters of inverter based on pulse width modulation (PWM)

Nominal input voltage	2800V
Nominal output voltage	2150V
Nominal output current	390A
Maximum output current	520A
Output Frequency	0~120Hz

3.2 System for monitoring, diagnosis and control of locomotive movement

The main functions of the Locomotive Control and Management System (TCMS) [8] are

- Full real-time control of the main inverter and induction motor;
- Real-time control of the auxiliary converter, traction/deceleration characteristic control;
- control of the traction system synchronisation logic;
- real-time display of locomotive operating status;
- complete protection against faults, during operation;
- memory and fault indication functions, as well as a degree of fault bypass;
- automatic switching and troubleshooting guidance functions.

3.3 Locomotive control and monitoring system

The locomotive control and monitoring system mainly consists of the power supply module, the logical operation control section, the digital I/O section, the analogue signal acquisition section and the communication section in terms of hardware. The main control unit uses a 32-bit CPU and is configured with redundancy and dual hot standby to improve system reliability [8]. The schematic diagram of the system is shown in Fig. 2.

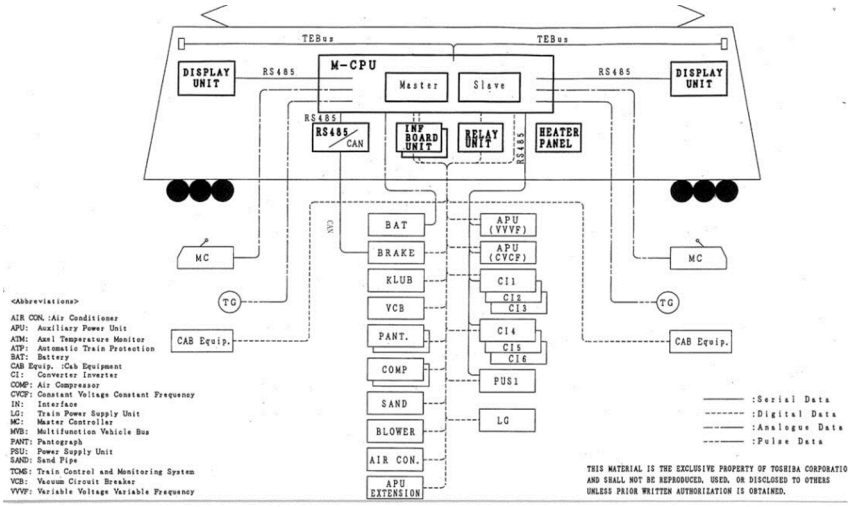

Fig. 2. Computer system block diagram

The main control cabinet contains the following modules:

- AVR power supply module, which supplies the TCMS system with direct current of various voltages, e.g. direct current of 24V, ±15V, 5V.
- The DET control and measurement unit is used to check that the main control system is not malfunctioning and to switch to the standby control system if the main control system fails.
- The serial communication interface SIF is used for communication between TCMS and the two main and auxiliary inverters, as well as between TCMS, the 110V DC supply module and the braking system.
- The DI digital input module, which processes the various switching signals received and transmits them to the processor unit.
- The AUX auxiliary module, with digital output, analogue input and pulse input, for controlling auxiliary relays and inputting special signals.
- MDM Reconnection control module that transmits the information of this vehicle to other vehicles via Ethernet and transmits the information received from other vehicles to the processor unit to implement the locomotive reconnection function.

3.4 System function

The TCMS plays a leading role in the overall management of the locomotive and its proper functioning directly determines the possibility of safe and normal operation of the locomotive. The TCMS has the following functions:

- Accepts all input commands via the HMI interface;
- collects various feedback signals from different types of sensors that determine the state of the locomotive;
- performs appropriate calculations necessary for the operation of the power and low voltage control circuits,
- generates appropriate commands for the operation of traction control, braking (including recuperation) and auxiliary systems;
- carries out functional diagnostics of the systems and transmits the results of calculations, information on faults and relevant parameters to the display, and is able to take actions to prevent the consequences of failure of various systems.

If the main control system fails, the dual hot standby mechanism automatically switches to the auxiliary control system. A diagram of the hot standby system is shown in Figure 4.

3.5 Simulation of a single traction motor control system

A model of an autonomous pulse width modulation (PWM) traction mode voltage inverter was created in a MATLAB program. Pulse generation with PWM implementation was simulated [5,6] (Fig. 3). In the left part of the circuit below, the circuit is shown in which the sawtooth voltage is superimposed on the modulating voltage and the resultant produces pulses of different widths (Fig. 4).

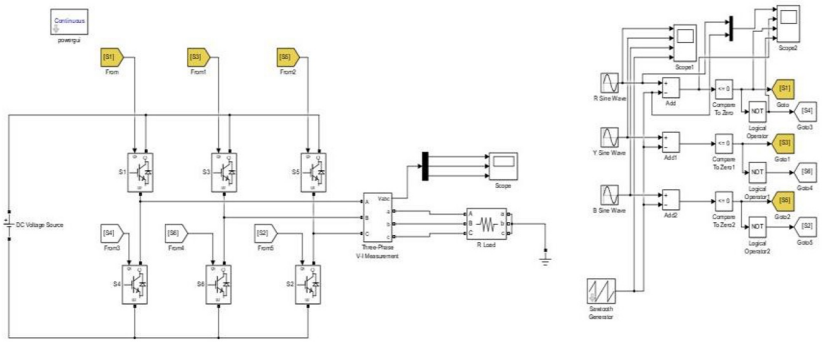

Fig. 3. Model of a stand-alone pulse width modulated voltage inverter (PWMI)

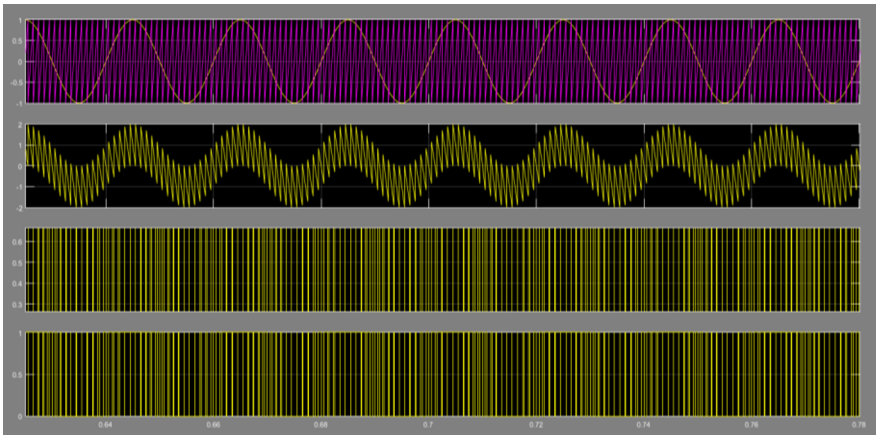

Fig. 4. Oscillograms of PWMI inverter control system signals.

4 Conclusion

Unlike the first series of electric locomotives with asynchronous traction motors, in which the electrical equipment of the Siemens company was installed [2,3,8], the new electric locomotives have a different realisation of the motor power system. Thanks to the use of the above-mentioned IGBT modules (Toshiba), which provide reliable power at a relatively low cost, there are separate power lines for each of the motors.

Meanwhile, operating experience has shown that the TCMS control system, which controls the traction converter, correctly generates the opening and closing pulses of the power transistors without omissions, thus ensuring a high power factor.

As the new locomotives are based on the HXd3C electric locomotive, there should be fewer problems with the availability and cost of components and their importation than with the first series of locomotives purchased.

References

1. D.O. Radjibaev, D.M. Insapov, Sh.N. Kahramonov, *Analysis of Traction Perfomance of the Ermak Electric Locomotive (3ES5K) in the Angren-Pap Mountain Section,* AIP Conf. Proc. (2023) DOI: 10.1063/5.0113235

2. D.O. Rajibaev, Application of electric locomotives with four-quadrant converter on the railroads of Uzbekistan (thesis abstract) (St. Petersburg State University of Railway Transport, 2011)
3. D.O. Rajibayev, O.K. Jalgasov, T.M. Mahmasalaev, Analysis of on-board diagnostic system actions of O'Z-Y series electric locomotives when malfunctions occur (Universum: Technical Sciences, 24-26, 2021)
4. T.M. Mahmasalaev, D.O. Rajibaev, O.K. Zhalgasov, Young Scientist **8**, 350, 8-12 (2021)
5. R. Li, X. Zhao, J. Wang, X. Li, IEEE Access **8** (2020), doi https://doi.org/10.1109/ACCESS.2020.3035092
6. A.D. Femine, D. Gallo, D. Giordano, C. Landi, M. Luiso, D. Signorino, IEEE Transactions on Instrumentation and Measurement **69(5)** (2020), doi https://doi.org/10.1109/TIM.2020.2967162
7. K. Song, G. Konstantinou, W. Mingli, P. Acuna, R.P. Aguilera, V.G. Agelidis, IEEE Transactions on Power Electronics **32(10)** (2017) doi https://doi.org/10.1109/TPEL.2016.2636882
8. T.M. Nazirkhonov, A.Y. Yakushev, I.P. Vikulov, Bulletin of scientific research results **3**, 41–63 (2020) doi: https://doi.org/10.20295/2223-9987-2020-3-41-63
9. Internet source: Official site of Dalian Locomotive Works: https://www.crrcgc.cc/tj/g9717.aspx