Geometric constraints system formation for helicopter construction

A.N. Dergachev[1*] and *M.V.* Klychnikova[1]

[1]Moscow Aviation Institute (National Research University), 125993, Volokolamskoe shosse 4, Moscow, Russia

Abstract. The paper presents a methodology of forming a system of geometric constraints in helicopter design. The methodology is based on the synthesis of the requirements in terms of ensuring operation on marine vessels, transportability, and capacity of the cargo (transport) cabin of the helicopter. The universality of this approach allows to adapt the formed system of geometrical constraints to helicopters of different purposes, both to newly developed and modernised helicopters. This methodology allows to define general geometrical characteristics of the helicopter, nomenclature of units requiring simplification of mounting and dismounting procedure of separate units and reduction of their inspection and maintenance periodicity, as well as configuration of helicopter ground and deck service facilities and recommended places of their installation. Key words: helicopter, aircraft development, design, geometric constraints, transportability, unit layout.

1 Introduction

The formation of a geometric constraint system is a multi-stage process. Like any design process, the development of aircraft models requires analysis of the requirements. First of all, the dimensional characteristics of the helicopter under development are influenced by the requirements for the number of flight crew members. The presence of an additional crew member, their functions and workplace requirements determine the minimum required volumes. In addition to the accommodation of the crew, the required volume of the cargo cabin (transport) is determined based on the general dimensions of the cargo or the target equipment to be transported (taking into account the means of loading and mooring) [1], as well as the transport of passengers. The dimensions of the cargo (transport) cabin are supplemented by the required number of door openings, and the dimensions of the openings should ensure the convenience of the tasks to be solved. To the received volumes we shall add the target equipment to the special compartment of the helicopter (for example, external cargo suspension, water-lifting device, dropable rescue equipment or additional fuel tanks) [2]. The dimensions of large-sized units - gearbox and engines are added to the obtained volumes. The results are presented in Fig. 1. The formation of preliminary dimensional characteristics of the transport cabin, fuel tanks, engines, and gearbox placement allows in the early stages of design to ensure the fulfilment of minimum requirements for the purpose of the helicopter under development [3].

* Corresponding author: lamosov@yandex.ru

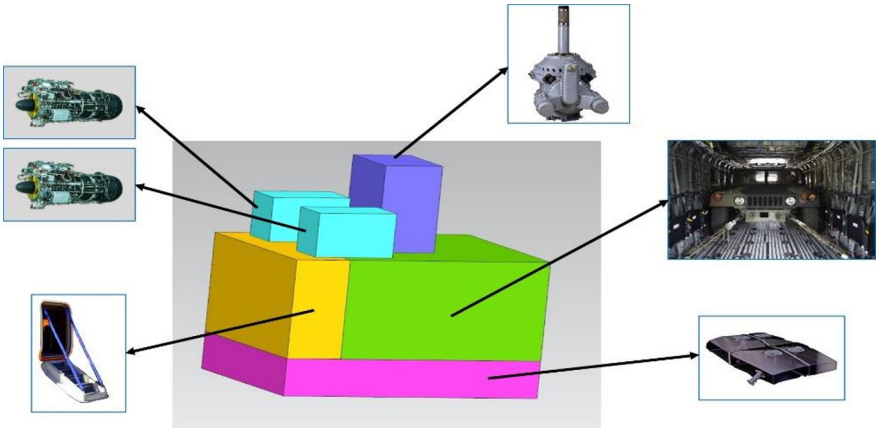

Fig. 1. Formation of transport cabin, special compartment, engines and gearbox dimensions

2 Methodology for shaping the image

The geometrical shape of a helicopter is also significantly influenced by external constraints. For deck-based helicopters, the main limitations are determined by the size of the runway and hangar dimensions. It should be taken into account that the runway dimensions determine the overall dimensions of the helicopter, and the hangar dimensions require the implementation of technical solutions to reduce the dimensions of the helicopter [4-6]. The peculiarity of determining the overall characteristics of the helicopter when placed in a hangar is the need to ensure the passage and parking clearances (Fig. 2).

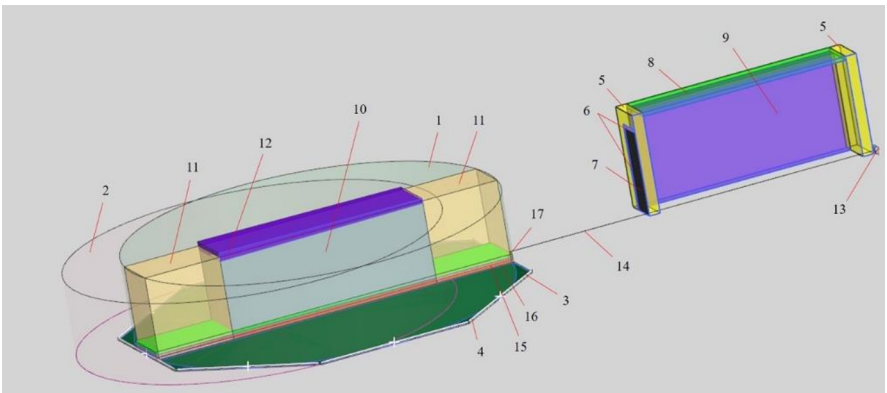

Fig. 2. Formation of helicopter dimensions taking into account RWY size and available hangar dimensions: 1 - helicopter dimensions determined by RWY dimensions; 2 - displacement of helicopter dimensions when the helicopter centre of gravity is placed in the RWY centre; 3 - RWY; 4 - RWY limiting bar; 5 - longitudinal parking clearances when the helicopter is placed in the hangar; 6 - transverse and vertical access clearances when the helicopter is rolled into the hangar; 7 - permissible helicopter dimensions when rolled into the hangar taking into account access clearances; 8 - vertical parking clearance; 9 - transverse parking clearance; 10 - permissible helicopter dimensions taking into account through and longitudinal parking clearances; 11 - helicopter dimensions to be reduced due to folding; 12 - helicopter dimensions change due to change of amortostoke rod outputs; 13 - towing system winch; 14 - towing system cable; 15 - permissible obstacle height; 16 - towing device height; 17 - required clearances to fuselage structure.

It is also necessary to take into account the possibility of helicopter height change during operation (due to fuel depletion and removal of removable equipment, change of clearance when towing the helicopter or ensuring the installation of equipment in the lower part of the fuselage, Fig. 2 item 12) [7].

3 Boundary conditions

Certain boundary dimensional characteristics of the helicopter placed in the hangar require further adjustment to the current requirements. For example, in accordance with [8-10], clearances and parking clearances should be provided with fully extended landing gear struts. To give the helicopter height limitations, we deduct the values of the maximum exit of landing gear strut rod mirrors from the permissible helicopter height. In helicopters of different types, the possibility and values of forced change of amortised strut rod output may differ. As an example, consider the following states of hinge rod outlets, reflected in the table 1 [11].

Table 1. Helicopter amotor strut rod outlets states

State no.	Changing the output of the front amotor strut rods	Changing the output of the rods main amotor struts
1	Not provided	150 mm
2	Not provided	280 mm
3	150 mm	150 mm
4	150 mm	280 mm
5	free position of the chassis	free position of the chassis

It should be noted that states 1-4 depend on the characteristics of the helicopter hydraulic system, and state 5 is provided by lifting the helicopter on hydraulic lifts. In case of necessity to service helicopter amortostacks or landing gear wheels in shipboard conditions, it is enough to provide a clearance of up to 20 mm between the landing gear pneumatics and the deck [12].

Dimensions to be reduced (Fig. 2, item 11) imply in the design process the implementation of technical solutions to minimise the overall characteristics of the helicopter by folding the air pressure receiver (APR) boom, helicopter tail beam, etc. At the same time, in case of necessity of separate helicopter maintenance works in the hangar (for example, during the expedition period) it is possible to work out the required hangar volumes.

Fig. 3. Helicopter positioning on RWY

Displacement of helicopter dimensions at its placement on RWY plays an important role at the stage of helicopter development taking into account prediction of helicopter maintenance frequency and methods in certain conditions (Fig. 3) [13].

One of the stages of forming the geometrical constraints system is working out the helicopter transportability. As an example, let us consider the constraints determined by the dimensional characteristics of the transport cabin of a cargo aircraft. The formation of the helicopter geometrical shape is influenced by the permissible dimensions of cargo, the range of movement of lifting means, the angle of inclination and the length of the ramp. The peculiarity of this modelling is the limitation of the dimensional characteristics of the helicopter prepared for transport.[14-16] The results of the preliminary development are reflected in Fig. 4.

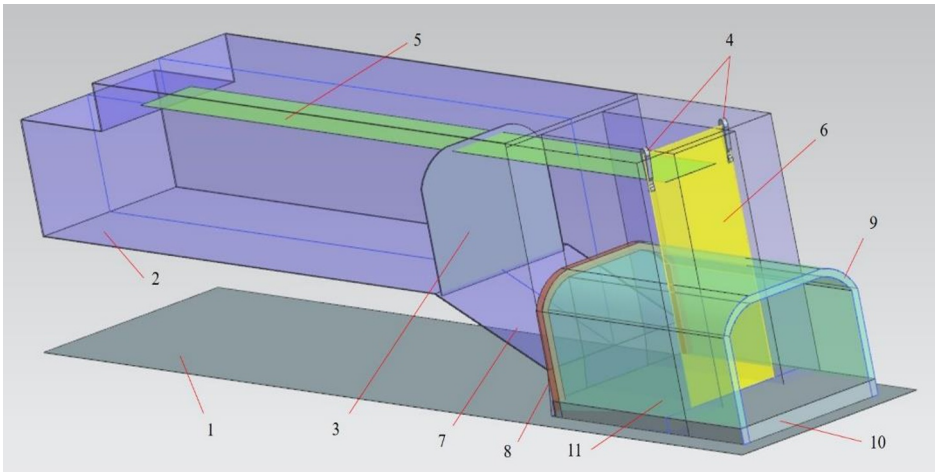

Fig. 4. Modelling of helicopter dimensions taking into account aircraft cargo cabin dimensions: 1 - ground surface; 2 - transport aircraft cargo cabin dimensions; 3 - permissible cargo dimensions; 4 - cargo electric hoists in extreme position; 5 - position of cargo electric hoist hooks in maximum lifted position; 6 - required position of helicopter rear rigging units during loading (unloading); 7 - transport aircraft ramp; 8 - clearance between ramp and helicopter before loading; 9 - required clearances during helicopter loading (unloading); 10 - helicopter clearance; 11 - projection of transport aircraft cargo cabin aperture.

4 Results

The peculiarity of helicopter loading (unloading) into the aircraft cargo cabin in most cases is the need to repeatedly lift the nose (tail) part of the helicopter and shift forward (backward) until the rear rigging unit reaches the extreme position of electric hoists [17]. This feature has an impact on providing the dimensional characteristics of the nose and tail part of the fuselage, and also determines separate areas of the fuselage, within which it is necessary to ensure the installation and dismantling work of helicopter units with minimum labour intensity and exclude the need to perform technological operations requiring separate conditions (for example, application of sealant) [18-38]. The process of modelling helicopter movements in the process of loading will allow to form geometrical restrictions of the lower part of the helicopter fuselage.

In a similar way the helicopter prepared for transporting by other types of transport is worked out [39]. A unified system of geometric constraints is formed according to the results of individual elaborations (Fig. 5). The totality of the formed constraints at the early stages of design allow to lay down such design solutions as:

- provision of tail beam folding to minimize helicopter dimensions during storage;
- determination of the most critical elements of the helicopter fuselage and equipment that require reduction of labour intensity of mounting and dismantling operations;
- determination of compartment (joint) sealing locations with elimination of complicated technological processes (e.g. sealant replacement);
- Formation of requirements to the helicopter hydraulic system (in terms of clearance change provision);
- determination of the nomenclature of units requiring remote diagnostics (using onboard and portable systems) or reducing the frequency of checks, including inspections [40-43].

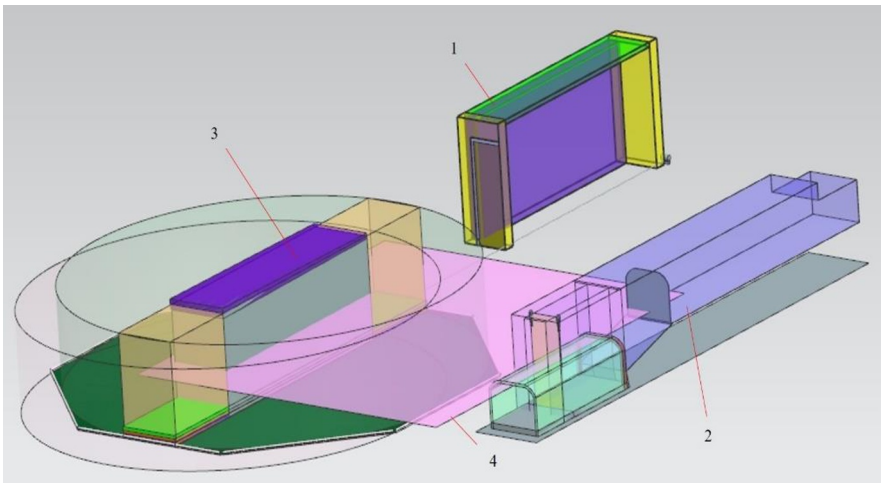

Fig. 5. Combined system of geometric constraints: 1 - result of modelling of helicopter dimensional characteristics when placed in a hangar; 2 - result of modelling of dimensional characteristics to ensure transportability; 3 - result of modelling when placing the helicopter on RWY and in a hangar; 4 - projection of height of the helicopter prepared for transport on the total permissible dimensions of the helicopter

5 Conclusions

The main advantage of this system is its versatility under identical operating conditions for helicopters of different types. In most cases, unified requirements are imposed on helicopters; in particular, to ensure transportability by specific types and modes of transport, the sizes of helipads and hangars are adapted to the operation of specific existing types of aircraft. When using serial units and devices, it is possible at early stages of design to predict the required dimensions of compartments and hatches (with specification at further stages of design) or to form requirements for mass and dimensional characteristics of newly developed or modernised units. In addition to the structural part of the helicopter, the application of this methodology allows to form requirements for the configuration of ground and deck service facilities and their installation locations (towing and taxiing drivers, hydraulic lifts, mooring devices, etc.).

References

1. A. Amosov, E3S Web of Conf. **402,** 10035 (2023)
2. A.V. Ryapukhin, Transportation Research Procedia **68**, 183-190 (2023)

3. E.V. Mikhailova, Journal of Physics: Conference Series **1889(4)** (2021)
4. E.V. Golikova, Transportation Research Procedia **68**, 249-256 (2023)
5. V.A. Golikov, IOP Conf. Ser.: Earth Environ. Sci. **1112**, 012032 (2022)
6. M.V. Kapitonov, E3S Web of Conf. **402,** 10036 (2023)
7. M.V. Kapitonov, Transportation Research Procedia **61**, 561-566 (2022)
8. GOST R 58849-2020 Civil aviation equipment. Creation procedure. Basic provisions.
9. P. Ukhov, A. Ryapukhin, *Development of online program for high school students on the development of engineering competencies using FDM 3D printing technology and design of electronic devices.* International Journal of Technology Enhanced Learning. 1. 1 (2021)
10. V. Golikov, Transportation Research Procedia **68**, 761-765 (2023)
11. E.Y. Churakova, AIP Conf. Proc. **2467(1),** 060053 (2022)
12. M.V. Kapitonov, L.B. Nikishina, E3S Web of Conf. **402,** 10037 (2023)
13. A. Amosov, E3S Web of Conf. **402,** 04011 (2023)
14. General Aviation Requirements for Helicopter Support Facilities on Offshore Ships and Raised Platforms - Moscow (1990)
15. M.V. Kapitonov, Transportation Research Procedia **61**, 556-560 (2022)
16. A. Burova, A. Ryapukhin, AIP Conf. Proc. **2402(1),** 040002 (2021)
17. Annex 14 to the Convention on International Civil Aviation, vol. 2 "Helicopters", 5th ed. (Montreal: ICAO, 2020)
18. L.N. Rabinskiy, V.A. Pogodin, S.A. Sitnikov, Periodicals of Engineering and Natural Sciences **9(4),** 347-356 (2021)
19. B.A. Garibyan, International Journal of Pharmaceutical Research **12(2),** 1829-1832 (2020)
20. A.V. Perchenok, E.V. Suvorova, A.A. Farmakovskaya, V. Kohlert, International Journal of Circuits, Systems and Signal Processing **15**, 1414-1420 (2021)
21. A.A. Farmakovskaya, N.S. Okorokova, A.V. Perchenok, E3S Web of Conferences **389**, 01041 (2023)
22. A.S. Zinchenko, Asia Life Sciences **22(2),** 243-256 (2020)
23. A.V. Perchenok, E.V. Suvorova, A.A. Farmakovskaya, V. Kohlert, WSEAS Transactions on Applied and Theoretical Mechanics **16**, 127-133 (2021)
24. A. Farmakovskaya, N. Okorokova, A. Perchenok, E3S Web of Conferences **371**, 04006 (2023)
25. A.Yu. Burova, Journal of Physics: Conference Series **2308(1),** 012006 (2022)
26. A.A. Farmakovskaya, N.S. Okorokova, A.V. Perchenok, E3S Web of Conferences **371**, 04003 (2023)
27. B.A. Garibyan, International Journal of Pharmaceutical Research **12(2),** 1825-1828 (2020)
28. G.A. Kalugina, A.V. Ryapukhin, Russian Engineering Research **41(7),** 627-630 (2021)
29. V. Goncharenko, Yu. Mikhaylov, N. Kartushina, Neural Computing and Applications **34(5),** 4033-4045 (2022)
30. A.A. Farmakovskaya, N.S. Okorokova, A.V. Perchenok, E3S Web of Conferences **389**, 01085 (2023)
31. Yu.P. Aleksandrova, E3S Web of Conferences **371**, 04002 (2023)

32. A. Burova, A. Ryapukhin, Journal of Theoretical and Applied Information Technology **100(21),** 6482–6489 (2022)
33. A.A. Farmakovskaya, N.S. Okorokova, A.V. Perchenok, E3S Web of Conferences **389**, 01042 (2023)
34. Yu.P. Alexandrova, E.V. Suvorova, E3S Web of Conferences **389**, 01039 (2023)
35. A.Y. Burova, Journal of Physics: Conference Series **1889(2),** 022003 (2021)
36. A.A. Farmakovskaya, N.S. Okorokova. A.V. Perchenok, E3S Web of Conferences **389**, 01084 (2023)
37. Yu.P. Alexandrova, E.V. Suvorova, E3S Web of Conferences **389**, 01040 (2023)
38. A.N. Astapov, V.A. Pogodin, Russian Metallurgy (Metally) **2021**, 12, 1529-1533 (2021)
39. M.Yu. Kuprikov, Structural-parametric synthesis of aircraft geometrical design under "hard" constraints: Tutorial (Moscow: MAI Publishing House, 2003)
40. G. Khotina, E. Churakova, Journal of Physics: Conference Series **1889(2)** (2021)
41. M.V. Kapitonov, IOP Conference Series: Earth and Environmental Sciences **1112(1),** 012018 (2022)
42. E.Y. Churakova, AIP Conference Proceedings **2467** (2022)
43. V.V. Spiryagin, J. Mech. Sci. Technol. **37**, 2903–2909 (2023)