Investigation of the capabilities of a supersonic transport system in a rarefied environment

Rena Timirgaleeva[1], *Yelena* Lukyanova[1], *Igor* Bukreev [2] ,*Victor* Selivanov[2], and *Anatoliy* Kazak[2*]

[1]Kherson State Pedagogical University, st. Universitetskaya, 27, Kherson, 273003, Russian Federation
[2]V.I. Vernadsky Crimean Federal University, ProspektVernadskogo 4, Simferopol, 295007, Russian Federation

Abstract: The paper is devoted to the study of problems in organizing high-speed ground transport traffic. The solution to this problem may be the organization of a combined transport system, which involves the movement of a transport unit in a rarefied environment of limited space, using the principles of magnetic levitation. The use of such a system will significantly increase the speed of a transport unit up to the supersonic range due to the following factors: reduced aerodynamic air resistance when moving; the absence of direct contact of the transport unit with the lower structure of the track and, as a result, the complete absence of friction; separate dedicated lines allow the use of structures that allow for a significant increase in freight traffic. The paper explores the possibilities of developing the basic principles of movement of a transport system based on magnetic levitation in a rarefied environment, modeling key processes, determining the main parameters of a new transport system and establishing their optimal ratio, reduced to conditions of safe and energy-efficient operation. As well as an assessment of possible risks associated with the use of this type of transport, both for freight and passenger transportation. Keywords**:** levitation, halfback array, power, magnet, passive mass-spring-damper system, levitation system, stabilization, braking, lithium-ion battery

1 Introduction

The idea of a passenger pipeline dates back to 1667, when the French physicist Denie Papin proposed using compressed air to transport goods through a pipe. In the second half of the 19th century, the possibility of building “atmospheric railways” was considered in Europe [1-10].

The idea of a vacuum train was put forward in 1911 by Russian physicist Boris Weinberg (Fig. 1).

* Corresponding author: kazak_a@mail.ru

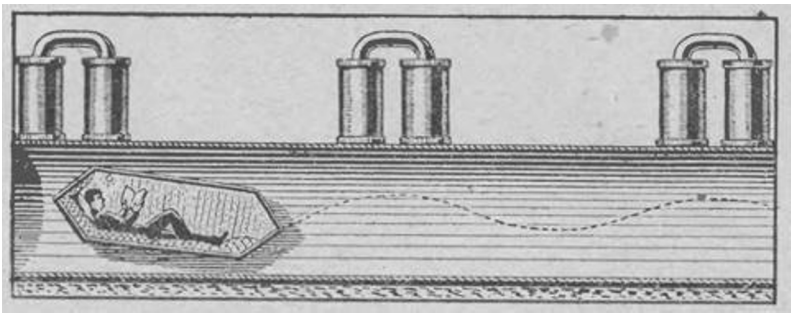

Fig. 1. B.P. Weinberg vacuum train

In 1911, professor of the Tomsk Technological Institute (TTI) B.P. Weinberg built an installation in which a trailer weighing 10 kg ran along a 20-meter ring overpass made of a copper pipe with a diameter of 32 cm. In his installation, Weinberg used electromagnetic levitation (EML) and a linear synchronous electric motor (LSM). The capsule-car was suspended under electromagnets, which transmitted it along a chain from one to another [11-15].

After experiments, successfully carried out in 1911–1913, a draft experimental route was developed, on which it was planned to reach a speed of 800-1000 km/h. A fully automated double-track road was supposed to carry 15 thousand passengers per day in one direction.

In March 1917, The Electrical Experimenter magazine published an article about a new type of transport (Fig. 2).

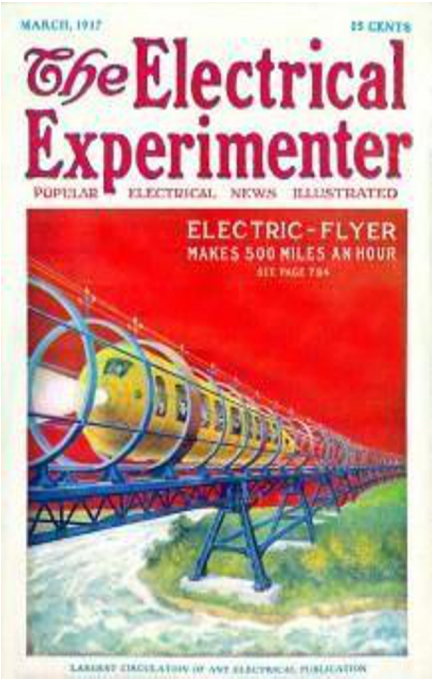

Fig. 2. Cover of The Electrical Experimenter magazine, March 1917

After the revolution and the end of the First World War, modeling of key development processes for this type of transport was stopped. The new type of ground transport, depicted on the cover of the magazine, largely corresponds to ETT technology [16-28].

2 “ETT” technologies: Magnetic levitation transport in a vacuum tube

In China, the laboratory of Southwest Jiaotong University is currently implementing a long-term program of scientific research on maglev technology ETT (Evacuated Tube Transportation). Its goal is to create ultra-high-speed maglev transport. The program began in 2001 and is due to be completed in 2024.

The program is based on the magnetic levitation transport technology of the “vacuum transport tube”. The vehicle, which is a capsule in the form of a sealed module of small capacity, possessing levitation qualities, is accelerated using a linear synchronous motor to the nominal speed and then moves in the tube to its destination without additional power consumption. In a pipe from which air has been pumped out, as a result of which there is practically no aerodynamic resistance, a speed of 1000 km/h can be reached. The vacuum transport pipe (two pipes - in the forward and reverse directions) is laid underground or on an overpass (Fig. 3).

Fig. 3. Overpass vacuum pipeline ground transport ETT

A prototype vehicle is currently being created in the laboratory of Southwest Jiaotong University. It is designed for an average speed of 500-600 km/h. A small model of such a vehicle will be built within 2-3 years. It is expected that it will be able to reach speeds of up to 1000 km/h.

3 Prerequisites

American inventor Daryl Oster proposed the idea of a new transport technology in 1980. By 1990, he had worked out this technology in detail and in 1999 received a patent for it. The

high-speed transport system of the future has been accepted for development by the company Evacuated Tube Transport Technologies (ET3). The company was specially created by the author of the idea.

Chinese specialist Zhang Yaoping, Doctor of Technical Sciences in transport engineering, having become acquainted with Daryl Oster's patent, expressed the idea that this transport technology is the best for China and the whole world. In 2001, the corresponding license was purchased in China.

According to Chinese scientist Shen Zhiyun, a member of the Chinese Academy of Sciences, vacuum transport technology makes it possible to achieve supersonic speeds. His colleague Zhang Yaoping, who is also a friend of the ETT patent holder Oster, and magnetic levitation expert Wang Jiasu have been working on this problem since 2002, i.e. almost since Daryl Oster and his wife made a multi-month visit to China at the invitation of the Chinese side. The Chinese Academy of Sciences, as well as NJT University in Beijing and the Design Institute of the Chinese Ministry of Railways, spoke in favor of ETT vacuum transport technology. During a 4-month stay in China, Daryl Oster assisted Dr. Zhang in organizing research on ETT at a top university in transportation technology in Chengdu (SWJT University Chengdu).

According to Chinese scientists, using a vacuum steel pipe instead of a vacuum tunnel, as proposed in the United States, is a simpler and cheaper technical solution to implement.

The vacuum tube will cost less than $3 million. This is significantly less than the cost of constructing a track for rail transport moving at a speed of 600 km/h. The passenger takes a seat in the capsule and travels in a vacuum tube with a diameter of 1.5 m. Air are constantly pumped out of the tube. The capsule is accelerated by a linear synchronous motor. Since there is practically no aerodynamic resistance in a vacuum tube, practically no energy is required to move the capsule along most of the path. In addition, when the capsule is braked, energy is regenerated. As a result, the energy costs for moving this vehicle are 50 times less than a traditional electric vehicle. The optimal speed within the state is 600 km/h, between states – 6500 km/h. For example, the distance between Washington and Beijing can be covered in 2 hours. The trip around the world will take about 6 hours.

Before boarding the vehicle, the passenger enters the name of the station through the computer terminal and takes his place in the capsule (Fig. 4)

Fig. 4. Automated loading and unloading of capsules

The 183 kg capsule, like a car, carries 6 passengers (deluxe capsule) with a total weight of 367 kg or corresponding cargo. Compared with a traditional high-speed vehicle, the cost of materials to produce capsules of comparable capacity is 20 times lower.

The speed of the capsule depends on the distance. With an acceleration of 1 m/s2, corresponding to sanitary standards, it takes 180 s for the capsule to reach a speed of 6440 km/h. During this time a distance of 161 km is covered. On highways up to 1000 km long, the cruising speed of the vehicle should be ~600 km/h. Capital costs for the construction of a highway with a vacuum pipe are 10 times less than for a rail road of similar length, and 4 times less than for a highway (Table 1). The capacity of a pair of pipes (in forward and reverse directions) corresponds to a highway with 2x16 lanes.

In 6 countries, 60 ETT licenses were purchased at a cost of $100 each, subject to a 6 percent royalty on future income.

Table 1. Technical data of ETT

<table>
<tr><td colspan="4">ETT Vacuum Tube Dimensions and Material</td><td>Speed Ranges</td></tr>
<tr><td colspan="4">Inner diameter 2÷5 m</td><td rowspan="2">Subsonic 600÷1000 km/h</td></tr>
<tr><td colspan="4">Length 600÷10000 km</td></tr>
<tr><td colspan="4">Pipe wall thickness: 20mm,18mm,16mm and 14 mm, respectively for pipes with an internal diameter of 5,4,3 and 2 m</td><td rowspan="2">Supersonic 6,000÷10,0000 km/h</td></tr>
<tr><td colspan="4">(Iron)concrete + steel (thickness 3÷10 mm)</td></tr>
<tr><td colspan="5">The need for structural materials and their cost</td></tr>
<tr><td>Vacuum pipe diameter, m</td><td>Steel pipe wall thickness, mm</td><td>Volume of construction materials, m3</td><td>Weight of construction materials, t</td><td>Cost of 1 km of steel vacuum pipe, million yuan</td></tr>
<tr><td>5</td><td>20</td><td>315,256</td><td>2459,0</td><td>12,295</td></tr>
<tr><td>4</td><td>18</td><td>227,097</td><td>1771,4</td><td>8,857</td></tr>
<tr><td>3</td><td>16</td><td>151,523</td><td>1181,9</td><td>5,909</td></tr>
<tr><td>2</td><td>14</td><td>88,535</td><td>690,6</td><td>3,453</td></tr>
</table>

4 The idea of the Transatlantic Tunnel project

The idea of a tunnel between London and New York, in a version with magnetic levitation of carriages and pumping out air, was first put forward in the 1960s and later surfaced several times. The project was not considered in working order, since according to experts, the construction of a floating or anchored pipeline transport structure is a complex technical task and requires financial costs of several trillion dollars.

Figure 5 shows one of the futuristic projects of the transatlantic vacuum magnetic levitation route.

The technical solution of one of the implementation options for ETT vacuum transport technology is shown in the figure from Daryl Oster's patent.

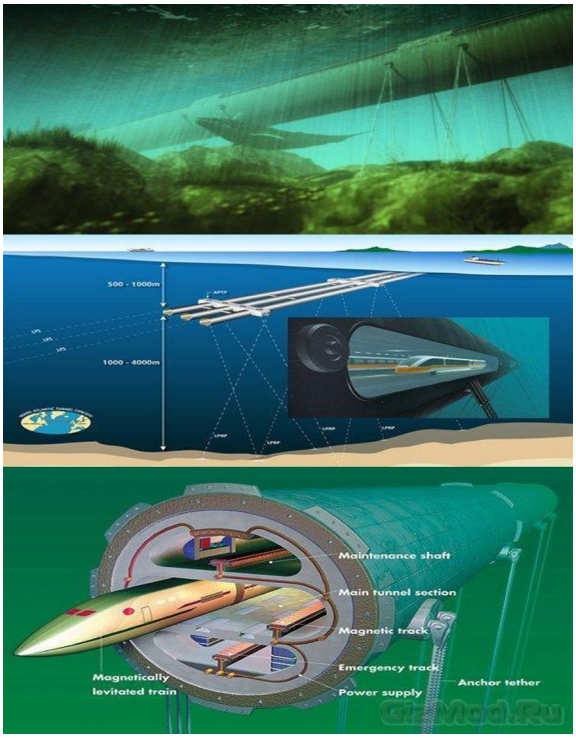

Fig. 5. Project of a transatlantic vacuum maglev route.

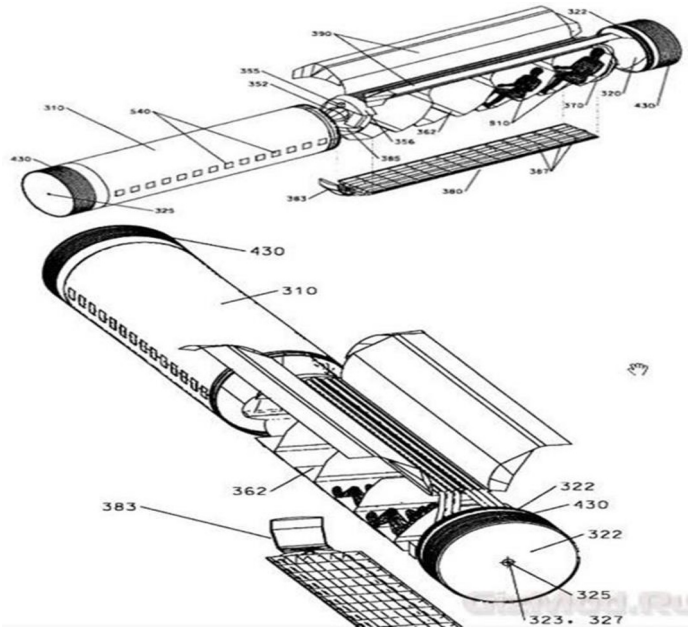

Fig. 6. Vacuum transport tube and launch station

5 Modern problems hindering the implementation of the ETT technology project

During the study, some problems were identified related to the lack of components of the required quality, which did not allow the project to begin. These include:

• Lack of necessary materials and modern technologies for constructing a vacuum pipe.

• Lack of necessary vacuum equipment.

• The technology for creating, controlling and maintaining vacuum in the pipe has not been developed.

• There are problems with the technological solution of heat removal from the vehicle.

• Design solutions and on-board equipment to ensure the tightness of the vehicle are not sufficiently developed.

• There is no reliable protection of the vacuum pipe from the possibility of electrical discharge in it.

6 Opinion of modern researchers

The idea of creating a vacuum train is interesting, but comes with certain risks. After all, if the cabins flying like pneumatic mail depressurize, people will die in a matter of seconds. If the air is simply thin, then it will be easier to save them by putting oxygen masks on everyone and mooring to the nearest station as quickly as possible. In this case, the risk will be less than if the aircraft depressurizes.

7 Conclusions

The study examined the following issues:

- the optimal ratios of the main parameters of the system were determined, namely: speed, degree of vacuum, dimensions, load capacity, energy efficiency;
- risks were identified when creating a freight transport system;
- the choice and justification of the method of creating and maintaining the required air rarefaction has been carried out;
- a preliminary assessment of energy costs to ensure the required vacuum was made;
- a preliminary assessment of the features of the use of maglev technologies in the type of transport being developed was made.

The results obtained at this stage of the work and presented in the article are used for further physical and mathematical modeling of key processes in the operation of the transport system.

Modern researchers propose the creation of a track and a train for high-speed transportation of large and heavy loads, as well as passengers. This train should be based on magnetic levitation, that is, it should move on a magnetic pad. The traction motor is linear synchronous. To eliminate air resistance to the ultra-fast movement of the train, it is recommended to move it in a vacuum tube. However, at present, train speeds at which air becomes an unacceptable obstacle are not sufficiently substantiated. Providing vacuum in the pipe and air in the cars is a large and unjustified additional cost and complexity.

At the first stage of creating ultra-high-speed ground transport, in our opinion, it is necessary to use a simpler, more efficient and less expensive alternative project for ultra-high-speed train transport.

In connection with the above, in the initial design the vacuum pipe should be excluded for a number of reasons:

• Firstly, air resistance is not critical and is small compared to the traction force of a linear synchronous motor.

• Secondly, atmospheric air can be used to create additional (along with levitation) lifting force of the train above the magnetic surface of the overpass (road).

There are some solutions to these types of problems. It is enough to turn to the experience of design and propulsion technology of Russian ekranoplanes, created under the leadership of chief designer R.E. Alekseev. As you know, an ekranoplan is a kind of hybrid of a ship and an airplane. It uses a small aerodynamic lift from the aircraft above the surface of the water or other flat surface. A dense air flow is created under the bottom of this vehicle, serving as a cushion or screen that holds the ekranoplane at a low altitude above the water. The same effect should be used to enhance the rise of a levitating magnetic train over a trough-shaped overpass. A high-speed maglev train must also be a hybrid, that is, with avionics elements, and for this it needs atmospheric air. The design features of this aircraft element of the future maglev high-speed super train are simple. This could be a special nose cone, flaps and landing gear at the bottom of the cars. The fundamental difference between the future "flying" super train will be the use of the physical phenomenon of repulsion of onboard and track magnetic poles, made using high-energy permanent magnets made of rare earth metals. And there are original solutions and practical developments in this issue. Levitation using permanent magnets does not have electrodynamics drag comparable to aerodynamic drag. There are no losses in this technical solution and no electrical power is required for operation. It is necessary and possible to solve fundamental issues in a new way, relying on modern developments, and then the problem of creating supersonic freight and passenger trains will be successfully solved in the foreseeable future.

References

1. Moe, Aung Soe, Vladimir A. Glushenkov and Vladimir G. Komarov. "Program for energy efficiency analysis of the multifunctional magnetic levitation transport system, ELTRO." 2021 3rd International Youth Conference on Radio Electronics, Electrical and Power Engineering (REEPE) (2021): 1-5.
2. Buchanan RA. The Atmospheric Railway of I.K. Brunel. Social Studies of Science. 1992;22(2):231-243. doi:10.1177/030631292022002003. S2CID 146426568
3. Kotenko, Alexey, Tatiana N. Malakhova and Timofey Shchmanev. "Multimodal transport as a mechanism for increasing the competition of long-distance passenger services." IOP Conference Series: Materials Science and Engineering 698 (2019): n. pag.
4. Premsagar, Smriti and Jeffrey R. Kenworthy. "A Critical Review of Hyperloop (Ultra-High Speed Rail) Technology: Urban and Transport Planning, Technical, Environmental, Economic, and Human Considerations." Frontiers in Sustainable Cities (2022). DOI: 10.3389/frsc.2022.842245
5. Ma, Yanli and Yue-e Gao. "Passenger Transportation Structure Optimization Model Based on User Optimum." Procedia Engineering 137 (2016): 202-209.
6. Max M.J. How does the aerodynamic design implement in hyperloop concept? Mechanical Engineering. MIT. Massachusetts Institute of Technology. Archived from the original on 3 October 2019. Retrieved 16 September 2019. Available from: https://www.mechanicalsite.com/2019/11/hyperloop.html
7. Buchanan RA. The Atmospheric Railway of I.K. Brunel. Social Studies of Science. 1992;22(2):231-243. doi:10.1177/030631292022002003. S2CID 146426568
8. Nøland, Jonas Kristiansen. "Prospects and Challenges of the Hyperloop Transportation

System: A Systematic Technology Review." IEEE Access 9 (2021): 28439-28458. DOI: 10.1109/ACCESS.2021.3057788

9. Mendes Borges, Rafael and Egidio Quaglietta. "Assessing Hyperloop Transport Capacity Under Moving-Block and Virtual Coupling Operations." IEEE Transactions on Intelligent Transportation Systems 23 (2022): 12612-12621. DOI: 10.1109/TITS.2021.3115700
10. Janic, M. (2018). Multicriteria evaluation of the high-speed rail, trans ´ rapid maglev and hyperloop systems. Transport. Syst. Technol. 4, 5–31. doi: 10.17816/transsyst2018445-31
11. Janzen, R. (2017). Trans pod ultra-high-speed tube transportation: dynamics of vehicles and infrastructure. Proc. Eng. 199, 8–17. doi: 10.1016/j.proeng.2017.09.142
12. Bernstein P., Noudem J. Superconducting magnetic levitation: principle, materials, physics and models. Superconductor Science and Technology. 2020. V.33. №3. P.033001. http://doi.org/10.1088/1361-6668/ab63bd
13. Mattos L.S., Rodriguez E., Costa F., Sotelo G.G., De Andrade R., Stephan R.M. MagLev-Cobra operational tests. IEEE Transactions on applied superconductivity. 2016. V.26. №3. P.1-4. https://doi.org/10.1109/TASC.2016.2524473
14. Fernandes J., et al. Superconductor joule losses in the zero-field-cooled maglev vehicle. IEEE Transactions on Applied Superconductivity. 2016. V.26. №3. P.1-7. https://doi.org/10.1109/TASC.2016.2528991
15. Gieras J. F. Ultra-high-speed ground transportation systems: Current Status and a vision for the future. Przeglad Elektrotechniczny. 2020. №9. P.1-7. http://doi.org/10.15199/48.2020.09.01
16. Kim, Jaeyoung, Chang-Wan Ha, Galen B. King and Changhyun Kim. "Experimental development of levitation control for a high-accuracy magnetic levitation transport system." ISA transactions (2020): n. pag.
17. Karpukhin, D. A., A. O. Petrov, Viktor V. Koledov, D.A. Suslov and I. V. German. "Gravitational acceleration and deceleration of magnetic-levitation transport." PROCEEDINGS OF THE SCIENTIFIC CONFERENCE ON RAILWAY TRANSPORT AND ENGINEERING (RTE 2021) (2021): n. pag.
18. Ye. Lukyanova, N.P. Shamaeva, CEUR Workshop Proceedings 2522, 100-110 (2019)
19. Bhuiya, Mohammad Abdul, Md Mohiminul Aziz, Fariha Mursheda, Ryan Lum, Navjeet Kaur Brar and Mohamed Youssef. "A New Hyperloop Transportation System: Design and Practical Integration."Robotics11 (2022): 23.
20. Kazak, N.N. Oleinikov, D.V. Gorobets, N.P. Shamaeva, IOP Conf. Ser.: Mater. Sci. Eng. 918, 012252 (2020) 10.1088/1757-899X/918/1/012252
21. Kassebi, Oussema and P. Siegfried. "The Hyperloop: The innovative logistic technology." Put i saobraćaj (2022): n. pag. DOI:10.31075/pis.68.01.02
22. Bhuiya, Mohammad Abdul and Mohamed Z. Youssef. "Initial Propulsion System Study for the Futuristic Hyperloop Transportation System: Design, Modeling, and Hardware in the Loop Verification." IEEE Access 10 (2022): 104050-104066.
23. Kazak, N. Oleinikov, V. Selivanov, et al., E3S Web of Conferences 363, 01045 (2022) DOI: 10.1051/e3sconf/202236301045
24. A.N. Kazak, N.N. Oleinikov, M.A. Ryndach, E.A. Sergeeva, IOP Conference Series: Materials Science and Engineering 918(1), 012235 (2021)
25. Selivanov V.V. Possibilities of perspective development of the Crimean tourist destination. Federalizm, 2021;26(2):187-205. (InRuss.). doi: 10.21686/2073-1051-

2021-2-187-205

26. Schislyaeva, Elena R., Olga A. Saychenko, Sergey Yevgenievich Barykin and Irina Kapustina. “International Energy Strategies Projects of Magnetic Levitation Transport.” Advances in Intelligent Systems and Computing (2018): n. pag.
27. Fedorova, Maria. “Forecast demand for use magnetic levitation transport.” (2020). DOI:10.17816/TRANSSYST202064143-160
28. Lapidus, Boris M.. “Magnetic levitation as the fundamental basis for superfast vacuum levitation transport technologies.” Transportation Systems and Technology (2018): n. pag. DOI:10.17816/TRANSSYST20184326-35