Hardening the rolling surface of the wheels bandage after mechanical treatment

Sherzod Fayzibaev[1*], *Irina* Soboleva[1], *Rodion* Nigay[1] and *Izzatillo* Raxmiddinov [1]

[1]Tashkent State Transport University, 1 Temiryulchilar Str., 100069 Tashkent, Uzbekistan

Abstract. Article describes calculated argumentation of the striker sealing surface, in the form of the two cylinders with parallel axes model of loading, having an effect on the rim surface of the wheel pairs of rolling-stock. There has been presented a calculation variant of the depth of hard running surfacing of the rolling-stock wheel pairs. Installation of deep hardening of rolling surfaces of wheel sets allows the special striker to create certain forces on the rolling surface of the wheel rim, to deform the surface layer to a certain depth, thereby increasing the hardness of the deformed surface. The article presents the technology for hardening the wheel running surface by loading the surface of the wheel set bandage, by means of the deep hardening installation with the creation of strain stress in the surface layers for several combinations of tensile strength σB and velocity σT of various bandage materials.

1 Introduction

Special attention is paid to the issues of interaction between a wheel and a rail in railway transport, since the safety of train traffic depends on the caracter of this interaction.

The complexity of the arrangement of railway tracks is due to the presence of: straight and curved sections with different radii of curvature, as well as sections with switches, which require special wheel rolling profile that allows successfully, with the least resistance, to overcome these obstacles along the train route. However, during the operation of the rolling stock, the wheel rolling surface wears out, various defects appear on the wheel rolling surface, threatening to derail the wheel and create emergency situations in railway transport. In this regard, when assessing the safety of train traffic, it is necessary to consider the rolling stock and the track as a single dynamic system.

Increasing train speeds have a great influence on the operating conditions of wheel sets. Permissible speeds of freight trains are defined within 90-100 km/h, passenger: 120-160 km/h (up to 200 km/h - high-speed trains). An increase in the speed of movement leads to the increase in dynamic loads on the wheel sets and the appearance of high-frequency oscillations in the areas with a high rigidity of the track. The increase in loads from the wheel set, the maximum realizable traction force and speed led to the increase in the stress state of the rails and wheels, which further increased the wear of the wheels and rails.[2]

* Corresponding author: shuhratassistent@gmail.com

In this situation, the decision was made that did not differ in a systematic approach to the problem, namely, the hardness of the rails was unilaterally increased, while the hardness of the working surfaces of the wheels was left the same. On the one hand, the use of heavy types of rails has significantly reduced the operating costs of railways. But as new rails were laid, the intensity of wear of the working edges of the wheel flanges increased even more. The average annual specific wear of the ridges of the bandages of wheel sets in some cases increased ≈3 times. The intensity of wear caused an increase in operating costs in the locomotive and wagon rolling stock associated with unscheduled turning of wheel sets, the additional purchase of new bandages and wheels.[3]

The wear and tear process of wheel sets and rails is a complex process which is determined by many factors. In quantitative terms, it can be established on the basis of existing observations of wear and tear in operation.

The working conditions of wheel sets are influenced by increasing train speeds. Increasing the speed of movement leads to the increase in dynamic loads on wheel sets, and the appearance of high-frequency vibrations in the areas with great rigidity of the track. Increasing the load from the wheel sets, maximum realized traction force and speed leads to an increase in the stress state of the rail and wheel, this in turn increases the wear of the wheels and rails[11-13].

Comb wear turning during repair is associated with the removal of a large volume of workable wheel metal, that is, with significant technological wear. So with uniform wear, for each millimeter of lateral wear of the ridge, it is necessary to remove metal along the thickness of the bandage to a depth of about 1.75 mm. Therefore, an increase in the proportion of such turnings always entails a disproportionately large reduction in the average life of the wheel.

Restoration of the wheel working performance during operation provides for actions aimed at restoring the wheel rolling surface to a state in which it will be able to meet the requirements of operation. When repairing wheelsets, all defects are eliminated and the parameters of the wheel rolling profile are restored. At the same time, restoration is carried out uneconomically. Due to defects on the rolling surface that occur during operation (sliders, dents, welds, etc.), and the possibility of cutting tool breakage during profile restoration, processing is carried out “under the crust”, i.e. to a depth below the hardened metal layer of the wheel rim.

2 Methods

The technology of restoring the wheel rolling surface is associated with the removal of a large volume of workable metal of the wheel rim. This is due to the lack of precise methods and means to carry out the optimal cutting process and keep a hardened metal layer on the wheel rolling surface.

After all, it is known that at the beginning of the running-in of parts, namely in the “wheel-rail” system, after turning, wear increases rapidly. On the wear intensity curve of parts operating in the friction pair (Fig. 1), three stages can be distinguished: 1 - running-in, 2 - steady wear, 3 - accelerated wear.

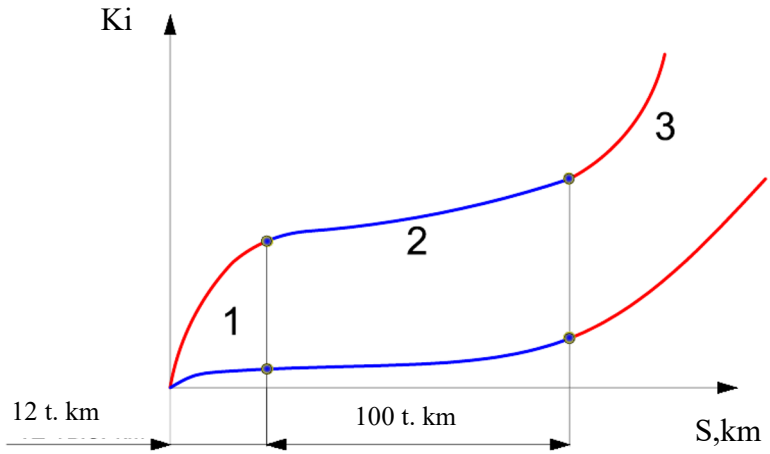

Fig. 1. General view of the wear curve of any surface: 1 - running-in stage; 2 - stage of uniform wear; 3 - stage of accelerated wear; Ki - wear rate

The first stage is characterized by an increase in wear intensity, which is explained by a small surface contact area due to macro- and microroughnesses and high contact loads as a result. At the end of the running-in stage, an equilibrium, stable surface roughness is established. Simultaneously, structural transformations occur in the surface layer with the formation of secondary structures. In the stage of steady wear, the intensity of wear is small and constant in magnitude. With the deterioration of working conditions, the third stage can also be observed - accelerated wear. The same is in the "wheel-rail" system. When the wheel interacts with the rail at the beginning of running-in (after turning), the period of intensive wear is approximately 12 thousand km. Then comes the period of uniform wear and it is about 100 thousand km. Therefore, it was necessary to find and eliminate the root causes that cause increased wear of the wheel sets bandages of locomotives and rails[11-13].

In operation, the rolling surface of the wheel after turning has intensive wear at the beginning, then there comes the moment when the wear proceeds smoothly. This is due to the fact that in the process of interaction of the wheel with the rail, the surface layer of the metal of the wheel rolling surface and the surface of the rail head are deformed, which leads to hardening of the wheel rolling surface. Studies on the hardening of the wheel rolling surface after turning have been carried out and various thermal and mechanical methods have been proposed.

In this case, a method is proposed that makes it possible to harden the surface of bandages, which contributes to an increase in the service life of wheel sets, namely, the installation of deep hardening of the rolling surface of wheel sets of locomotives.

Structural scheme of the striker 1 for hardening the surface of the bandage is shown in Figure 1 and is designed to transfer maximum radial forces up to P_A=15 tf.

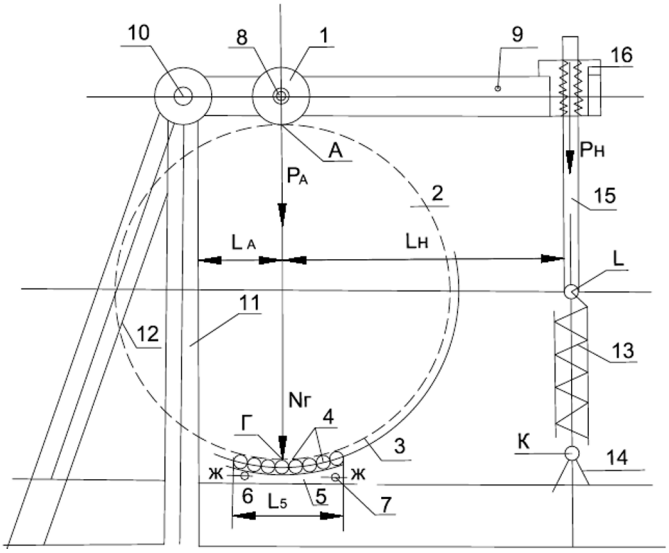

Fig. 2. Calculation scheme for loading the striker on the wheel rolling surface

The figure shows the scheme of loading the striker 1 using the lever 8 with the hinge of rotation in t. 10 and the support 11 fixed on the frame 12 of the installation. The lever 8 is loaded by the force P_H, created from the tension of the spring 14, the ends of which are fixed in the point K to the bracket on the installation frame 6 and in the point L to the screw 15. The screw 15 is connected to the nut 16 mounted on the lever 8 with the possibility of rotation around the screw 15 and lever 8. The choice of the magnitude of the force P_H should be linked to the dimensions 1A, 1H and provide P_A values up to 15 tf. In support 5, nine balls dsh = 28.58 mm should be placed in the toroidal groove, touching the section of the bandage crest. Under the action of the force P_A =12 tf from the striker 1 on the bandage 2, the calculated load on one ball 4 will be equal to N_1=1333 kg with the maximum value of such a load on the middle ball N_1=2600 kg.

To connect the movable support 5 with the plate 6, 2 bolts 7 must be used. The developed stand is planned to be used for wheel-motor units after factory repair. Every such block is installed on the frame of the stand with the support of the zones of two crests of bandages on balls 4 of two identical supports 5. Each wheel has an individual loading system through strikers 1 on bandages 2, crests and balls 4. After assembling the wheel-motor unit (WMB) with supports and the loading system on the stand connects the cables of the traction motor to a DC source with the power of 100-200 kW current. In this case, the traction power Nd of the electric motor through the traction transmission to the wheel set is used to ensure the hardening of the rolling surfaces of the bandages and the zone of the rims.

3 Discussion

Based on the studies [1-13], we will accept the calculated justification of the sealing surface of the striker that acts on the surface of the bandage of the rolling stock wheel set. Sealable surface of bandages: cylindrical surface with radius Rc=160 mm at Rk=525 mm and width of two protrusions lb=8÷6 mm, loaded with vertical load Pv, for each protrusion.

Loading model of two cylinders with parallel axes [8], for which the radii R1=80mm (striker) Rk=525mm are taken with the width of two support ledges 2v=8mm, loaded with vertical force P=2 Pv=(10÷12) 103kg, which correspond to the conditions of real static

loading of bandages of the rolling stock wheel sets; elastic modules of bandages and striker materials are taken equal to E1=E2=2.1·104kg/mm2, and Poisson's ratios μ1= μ2=0.3.

To control the calculated loading by the forces of RA, measuring devices must be installed on the strikers and bandages that control the magnitude of the elastic deformation of the spring 14, which must first be calibrated using reference measuring devices for recording tensile forces.

The installation must be equipped with a control panel and electrical devices that control the traction power spent on hardening the surface layers of the bandages of the WMB wheel set. The control devices of the console must allow smooth regulation of traction power up to 200 kW at a wheel pair rotation speed up to 100 rpm and maximum current values up to 1000 A flowing through the windings of the poles and armature of the traction motor.

After experimental specification of the radial modes of strengthening the material of diesel locomotive bandages for the designed stand, on the basis of theoretical and computational studies, the technological provisions of the stand operation manual will be defined[11-13].

In order to assess the effect of hardening of the material of the bandages on this test stand, we use a technique with the determination of the values of volumes V1 and areas S1, which characterize the intensity of wear of these bandages at the straight sections. Using this method, we perform calculations for the following combinations of tensile strength σB and yield strength σT of the bandage material:

- the first one with σ_B=90 kg/mm2 and σ_T=35 kg/mm2 corresponding to steel 60 (GOST 1050-60),
- the second one with σ_B=100 kg/mm2 and σ_T=40 kg/mm2 corresponding to St1 according to GOST 398-81,
- the third with σ_B=110 kg/mm2 and σ_T=45 kg/mm2 corresponding to St2 according to GOST 398-81,
- the fourth one with σ_B=150 kg/mm2 and σ_T=50 kg/mm2 corresponding to the maximum values under operating conditions and steel St65G (quenched and tempered with replacement of σ_T by σ_{-1}, σ-1 is the endurance limit,
- the fifth with σ_B=150 kg/mm^2 and σ_T=50 kg/mm^2, with increased tensile strength and yield strength in the surface layers of bandages after hardening them on the stand. The initial data for the calculation were the loading conditions for the tires of wheel pairs of electric locomotives of the VL-80 type at the straight sections of the track and in curves at N_D=104 kg, corresponding to the speed of this electric locomotive of 72 km/h and the radius of the curve R=600 m. σ_B and fluidity σ_T of the material of wheel pair bamdages of electric locomotives of the VL-80 type on the values of wear intensity V_1 and S_1 of the surface of their rolling along the rails are summarized in Table 1.

Table 1. σB and fluidity σT of the material of wheel pair bamdages of electric locomotives of the VL-80 type on the values of wear intensity V1 and S1 of the surface of their rolling along the rails are summarized

σ_B, kg/mm^2	90	100	110	110	150	150
σ_T, kg/mm^2	35	40	40	45	50	65
V_1, m^3/revolution	0.151	0.108	0.0955	0.0883	0.0456	0.0412
$S_1 \cdot 10^6$, m^2/revolution	31.67	23.57	14.88	13.32	9.71	8.92

4 Conclusion

Based on the results obtained, the following conclusions can be drawn:

- increasing the tensile strength and fluidity of the material of the locomotive wheel pair bandages, produced using the designed stand, allows to reduce the wear intensity of the rolling surfaces of these bandages by 3.0 - 3.5 times.

- ensuring an increase in the tensile strength and fluidity strength in the deep layers of the bandages, spaced at distances of more than 7 mm from the rolling surface of wheel sets on rails, will help maintain the values of wear rates (V1 and S1) throughout the entire run of these wheel sets until they are terminated, according to the requirements RTE. Therefore, the expected mileage of locomotive wheel sets before their re-turning should increase by more than 3 times. This determines the economic efficiency of the test stand and the technology of deep hardening of the surface layers of the locomotive wheel set bandages. The implementation of the technological process of deep hardening of the rolling surfaces of wheel sets, according to computational and experimental studies, contributes to an increase in the runs of wheel sets by 2-2.5 times between their next turning under operating conditions achieved at «UTY» JSC at the present time.

References

1. G.M. Shahunyants, Railway track: textbook. for universities (M., Transport, 1987)
2. I. V. Biryukov, A. N. Savoskin, G. P. Burchak and others; ed. I. V. Biryukova, Mechanical part of traction rolling stock. Textbook for universities of railway transp. (M., Transport, 1992)
3. E.A. Shur, N.Ya. Bychkova, D.P. Markov, N.N. Kuzmin, Wear resistance of rail and wheel steels. Friction and wear. (M., Transport, 1995)
4. Design and dynamics of diesel locomotives. Ed. 2nd, add., ed. Ivanova V.N. (M., Transport, 1974)
5. V.F. Yakovlev, Investigation of the forces of interaction of deformations and stresses in the contact zone of railway wheels and rails. Diss. for DSc of Tech. Sciences. (L., LIIZhT, 1964)
6. A.Ya. Kogan, Track dynamics and its interaction with the rolling stock. (M., Transport, 1997)
7. Sh.S. Faizibaev, I.Yu. Soboleva, N.A.Samborskaya, *Improvement of the rolling profile and increase in the resource of rolling stock wheel pair bandages*, Innovative projects and technologies of machine-building industries: materials of the third All-Russian scientific and technical conference (October 10, 2019) / OmGUPS. Omsk, pp. 81-85 (2019)
8. Sh.S. Fayzibaev, R.P. Nigay, I.Yu. Soboleva, M.K. Abdulloev, Kh.Kh. Otadzhanov, Young scientist **6(401)**, 32-34 (2022)
9. G.S. Pisarenko, A.P. Yakovlev, V.V. Matveev, Handbook of Strength of Materials. 2nd ed., revised. and additional (Kyiv, Nauk. Dumka, 1988)
10. A. D. Glushchenko, Sh. S. Faizibaev, Simulation of impulse dynamic and thermal loading of the wheel pairs material of locomotives. Monograph (Tashkent., Fan, 2002)
11. S. Saidivaliev, S. Djabborov, B. Abdullaev, S. Abduvakhitov, D. Juraeva, E3S Web of Conferences **389**, 05023 (2023)
12. S. Djabbarov, J. Abdirakhmanov, B. Abdullaev, R. Yuldoshov, V. Ergasheva, E3S Web of Conferences **389**, 05048 (2023)
13. S. Djabbarov, S. Saidivaliev, B. Abdullaev, S. Inagamov, Y. Abdusaid, E3S Web of Conferences **371**, 04035 (2023)