Increasing the wear resistance of highly loaded parts such as bodies of rotation by the method of vibration rolling

P.V. Leonidov[1*]

[1]Moscow State Technological University «STANKIN», Moscow, Russia

Abstract. The article analyses the increase of durability of operating surfaces of highly loaded machine parts. The advantages of surfaces with regular microgeometry, obtained by vibration rolling method, compared with usual rough surfaces for improvement of operational properties are shown. Tests of samples and control samples from steel 20 and cast iron samples with control samples from steel processed by grinding and vibration rolling are carried out. The results of research on increasing the wear resistance of the surfaces of details with regular microgeometry are given. Wear mechanisms arising at fretting of vibro-rolled samples in comparison with the process of grinding are established. Key words. Operating surfaces, regular microgeometry, vibration rolling, fretting corrosion, wear mechanisms

1 Introduction

The increase in wear resistance of the operational surfaces of highly loaded machine parts is closely connected with the provision of the required microgeometry parameters of the working surfaces and methods of finishing and finishing processing. Depending on operating conditions, it is possible to determine the best microgeometry parameters that allow to provide a high wear resistance of the friction pairs [1-5].

One of the types of wear is fretting (fretting-corrosion), manifested at vibrations of nominally stationary parts, when due to the minimum amplitude of friction the wear products are not removed from the contact zone, having a significant impact on the wear mechanism [6, 7].

This problem is especially relevant for the operation of machine parts and assemblies operating under conditions of increased loads and vibrations [8, 9].

Based on the analysis of literature sources, it is promising to create such a surface microrelief, which would allow not only to create friction surfaces, contributing to the increase of their wear resistance, but also to regulate the parameters of microrelief in the process of mechanical processing [10 -13].

The need to create regular microreliefs arises due to the fact that the use of traditional processing methods during turning does not allow to provide the necessary operating conditions, creating chaotic and difficult to control surface microrelief. In this case, in spite

* Corresponding author: leonidov78.54@mail.ru

of the identical roughness height parameters (Ra), a microrelief appears, which is far from optimal in terms of the shape and location of irregularities with excessively pointed irregularities with small pitch on protrusions and in depressions (Fig.1). This method of processing practically excludes the possibility of controlling such parameters of microgeometry as the shape of protrusions and depressions, their number per unit area, location both relative to each other and to the direction of the friction track [10-14].

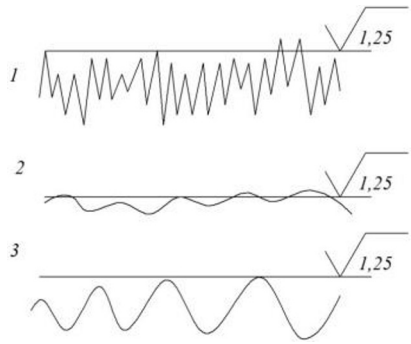

Fig. 1. Profilograms of surfaces machined by different methods: 1-turning work, 2-grinding, 3-vibration rolling

The method of vibration rolling is based on thin plastic deformation of surface layers of the processed material by hardened ball or diamond indenters and complication of kinematics due to oscillation motion of the deforming element. This provides the possibility of regular microrelief formation and smooth variation in large values of all its parameters, i.e. reliable control of the process of creating regular microreliefs on the surface of the part (Fig. 2).

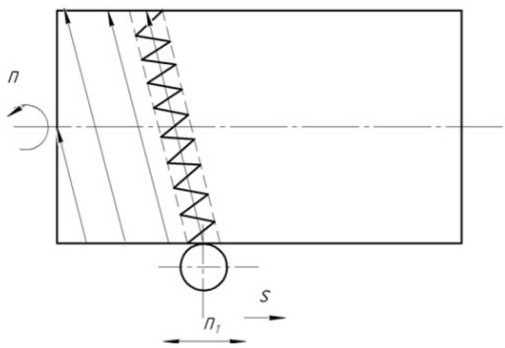

Fig. 2. Scheme of regular microrelief formation on rotational parts

The regularity of shape, size and mutual location of surface irregularities predetermines the possibility of calculating the values of their parameters as a function of various operational properties, i.e., to proceed to the computational normalisation of the surface microgeometry of the part.

2 Experimental results and discussion

The conducted research allowed to determine the optimal combination of regular microrelief for some typical groups of machine parts, allowing to improve such their operational characteristics as duration of running-in and wear, resistance to setting,

temperature regime, fretting wear and others. One of the most important factors influencing the friction and wear processes is the presence of flat tops combined with uniform roughness depressions, which contribute to the retention of lubricant and its distribution on the surface, which is especially significant during start-up, running-in and the occurrence of harsh conditions during operation [9, 15, 16-18].

The materials used were bronze samples with control samples made of steel 50. The improvement of wear resistance during the run-in period for vibration-rolled specimens with regular surface microrelief is explained both by the influence of microrelief and hardening of the surface layer during indenter rolling.

In friction of surfaces with conventional treatments (turning, grinding, polishing), sharp protrusions of microroughnesses can play the role of stress concentrators, while surfaces that are too smooth are prone to scoring and seizure, which can occur especially when lubrication is insufficient [19-25, 34].

Testing under equal load conditions and duration of tests under different types of processing of ground and vibro-rolled specimens made of steel 45 in combination with control specimens made of cast iron showed a significant decrease in the temperature in the friction zone, and consequently, a decrease in the tendency to scoring and seizing. Such phenomenon is also explained by the presence of regular microrelief, providing more uniform development of wear process and improving the condition of distribution and preservation of lubricant in the contact, when the depressions of microrelief fulfil the role of "oil pockets", and the bearing capacity of such a surface is not reduced. At the same time the friction coefficient of vibro-rolled samples is reduced by 25-30%.

Fretting or fretting corrosion, as mentioned above, is a specific type of friction occurring between nominally stationary parts due to vibrations during operation. Lack of lubrication in the contact causes corrosion processes that increase wear. Fretting wear is manifested by "eating away" of the material at the points where the parts of the structure are fastened together. A characteristic feature of fretting, unlike other types of sliding friction, is a small amplitude of relative displacements of the counterbodies, comparable to the distance between the tops of microroughnesses on the friction surface. As a consequence, wear products are not removed from the contact zone, acting as a "third body", often leading to the occurrence of abrasive wear. Often fretting corrosion becomes the cause of failure of important assemblies and machine parts [26, 28-32].

As a consequence, we tested samples and control samples made of steel 20 and cast iron samples with control samples made of steel, processed by grinding and vibration rolling with the formation of partially regular microrelief with intersecting grooves. Test conditions were as follows: for friction pairs made of steel the amplitude of reciprocating-rotational movement was 100 microns, pressure 20 MPa, frequency 900 cycles per minute; for steel-iron pairs - amplitude 50 microns, pressure 85 MPa, frequency 500 cycles per minute. The number of test cycles for each pair was 0.5x106 cycle. In both series of tests, the wear of specimens treated by vibration rolling decreased by 1.8-2.2 times.

In order to establish the mechanisms of wear arising at fretting of vibro-rolled specimens in comparison with the ground ones, metallographic study of steel specimens was carried out, which show friction tracks of ground (Fig. 3, a) and vibro-rolled specimens that appear after carrying out the specified tests (Fig. 3, b).

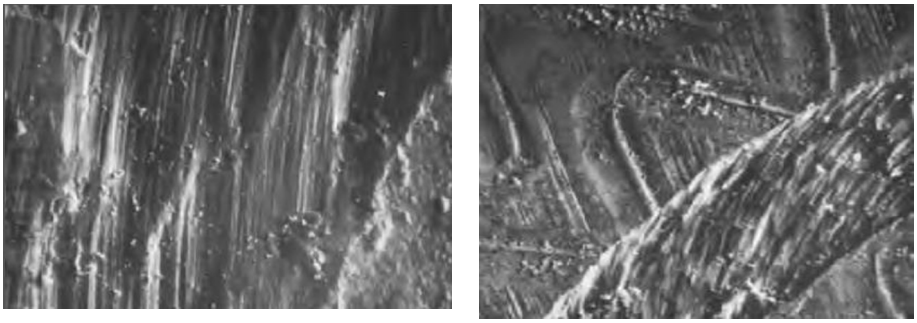

a) b)

Fig. 3. Friction track during fretting on a steel surface: a - grinding, b - vibration rolling

On friction surfaces of ground samples typical for fretting wear areas of relief in the form of caverns filled with oxidised wear particles are observed. Oxidation is evidenced by the specific effect of charge accumulation on the poorly conducting surface of oxidised particles, which worsens the image contrast and creates the impression of "glow" under the action of the electron beam. Since no such effect is observed on the rest of the surface, it can be assumed that oxidation of wear particles occurs after their formation due to the interaction of oxygen with the surface of small particles activated in the process of friction, i.e., the corrosion process is probably not directly related to the fretting wear mechanism itself, especially since the areas with oxidised particles occupy a relatively small area of the total friction surface. On the friction track there are also areas covered with particles a few micrometres in size without traces of oxidation, on which brittle fracture cracks are visible. Apparently, these particles are carbide or other inclusions characteristic for steels as a result of destruction of pearlitic interlayers during friction [27, 33].

A slightly different mechanism of wear resistance enhancement is realised for vibration-rolled specimens with the formation of regular microrelief. Fig. 3, b shows that the surface of the friction track is divided into separate facets, the scale of which is commensurate with the amplitude of displacement during fretting. Within the individual facets, apart from the usual grooves in the sliding direction, the formation of any specific surface layers with a structure different from that of the original steel is not visible. Probably, this faceted character of the friction track reflects the process of crushing of stress and strain waves on the surface with regular microrelief, which gives a significant contribution to the fretting resistance enhancement effect.

3 Conclusion

Vibratory rolling with the formation of regular microrelief of friction surfaces provides significant opportunities to improve a number of operational, primarily tribological, characteristics of machine parts. The effect of regular microrelief formation is most pronounced in severe wear conditions, preventing scoring, seizures and reducing fretting wear. The presence of regular microrelief increases the bearing capacity of the surface, promotes the preservation of lubricant in contact, and the removal of wear products. Under stress conditions, regular microrelief promotes crushing of stress waves and deformations on the surface, thus increasing shear sensitivity and preventing the development of fatigue damage.

As a result of the conducted research the positive influence of the regular microrelief of the surface, obtained by the method of vibration rolling, on a number of operational

characteristics of machine parts has been established. Especially effective application of this method seems to be for parts of friction pairs working under conditions of high loads and vibrations, a characteristic, in particular, for many machine parts.

References

1. R. Neugebauer, C. Hochmuth, G. Schmidt, M. Dix, Advanced Materials Research **223**, 212-221 (2011) https://doi.org/10.4028/www.scientific.net/AMR.223.212
2. V.V. Maksarov, A.E. Efimov, A.I. Keksin, Materials Science Forum **1022,** 7-16 (2021) https://doi.org/10.4028/www.scientific.net/MSF.1022.7
3. J. Olt, V.V. Maksarov, V.A. Krasnyy, Journal of Mining Institute **229**, 77–83 (2018) https://doi.org/10.25515/pmi.2018.1.77
4. V.V. Maksarov, I.V. Gorshkov, A.D. Khalimonenko, Chernye Metally **2022(6),** 75-80 (2022) https://doi.org/10.17580/chm.2022.06.12
5. V.V. Maksarov, S.A. Vasin, A.E. Efimov, Russian Engineering Research **41(10),** 939-943 (2021) https://doi.org/10.3103/S1068798X2110018X
6. J. Olt, V.V. Maksarov, V. A. Krasnyy, Journal of Mining Institute **235**, 70-77 (2019)

https://doi.org/10.31897/pmi.2019.1.70

7. V.A. Krasnyy, V.V Maksarov, Chemical and Petroleum Engineering **2**, 34-37 (2017) DOI:10.1007/s10556-017-0306-x
8. L. Kong, X. Peng, Y. Chen et al., International Journal of Extreme Manufacturing **2,** 022001 (2020) https://doi.org/10.1088/2631-7990/ab7ae6
9. V.V. Maksarov, A.D. Khalimonenko, International Review of Mechanical Engineering **12(5),** 437- 441 (2018) https://doi.org/10.15866/ireme.v12i5.14570
10. V.V. Maksarov, A.D. Khalimonenko, J. Olt, Chernye Metally 2021(3)**,** 45-51 (2021) https://doi.org/10.17580/chm.2021.03.08
11. V.V. Maksarov, A.D. Khalimonenko, Key Engineering Materials **736,** 86-90 (2017) https://doi.org/10.4028/www.scientific.net/KEM.736.86
12. V.V. Maksarov, A.I. Keksin, I.A. Filipenko, Tsvetnye Metally **7**, 82-87 (2022) https://doi.org/10.17580/tsm.2022.07.09
13. V.V. Maksarov, M.A. Popov, V.P. Zakharova, Chernye Metally **2023(1),** 67-73 (2023) https://doi.org/10.17580/chm.2023.01.10
14. V.V. Maksarov, S.A. Vasin, A.I. Keksin, Russian Engineering Research **41(10),** 944-947 (2021) https://doi.org/10.3103/S1068798X21100191
15. V.V. Maksarov, J. Olt, A.I. Keksin, R.A. Shcheglova, Chernye Metally **2022(2),** 49-55 (2022) https://doi.org/10.17580/chm.2022.02.09
16. V.V. Maksarov, J. Olt, A.D. Khalimonenko, Agronomy Research **1(14)**, 1043-1051 (2016)
17. M.A. Admakin, A.D. Khalimonenko, V.P. Zakharova, Van Dao Nguen, Chernye Metally **2,** 82-87 (2023) https://doi.org/10.17580/chm.2023.02.12
18. V.V. Maksarov, J. Olt, V.A. Krasnyy, Agronomy Research **1(14)**, 1023-1033 (2016)
19. V.V. Maksarov, Agronomy Research **3(13)**, 671-679 (2015)
20. A.D. Khalimonenko, K.P. Pompeev, D.Y. Timofeev, IOP Conference Series: Materials Science and Engineering **1047,** 12029 (2021) https://doi.org/10.1088/1757-899X/1047/1/012029

21. V.V. Maksarov, D.D. Maksimov, M.S. Sinyukov, Tsvetnye Metally, **4,** 96–102 (2023) DOI:10.17580/tsm.2023.04.13
22. V.V. Maksarov, L.B. Alekseeva, IOP Conference Series: Materials Science and Engineering **372(2),** 22-25, (2018) DOI:10.1088/1757-899X/327/2/022003
23. V.V. Maksarov, J. Olt, Annals of DAAAM and Proceedings of the International DAAAM Symposium **1**, 223-228 (2015) DOI:10.2507/26th.daaam.proceedings.031
24. V.V. Maksarov, V.A. Krasnyy, D.A. Klochkov, Journal of Physics: Conference Series **1753**, 12030, 1-7 (2021) DOI:10.1088/1742-6596/1753/1/012030
25. I. Virro, M. Arak, V. Maksarov, J. Olt, Agronomy Research **18(S4)**, 2797 2810 (2020) https://doi.org/10.15159/ar.20.207
26. V.V. Maksarov, A.O. Minin, V.P. Zakharova, Tsvetnye Metally **4**, 90-95 (2023) DOI:10.17580/tsm.2023.04.12
27. J. Olt, V.V. Maksarov, A.E. Efimov, Russian Engineering Research **43**, 319-322 (2023) DOI:10.3103/S1068798X23030255
28. J. Olt, V.V. Maksarov, G.V. Petrishin, E.F. Panteleyenko, M.I. Liskovich, Russian Engineering Research **43**, 314-318 (2023) DOI: 10.3103/S1068798X23030243
29. V.V. Maksarov, A.E. Efimov, J. Olt, International Journal of Advanced Manufacturing Technology, **3**, 1027-1042 (2022) DOI:10.1007/s00170-021-07975-7
30. V.V. Maksarov, D.A. Klochkov, Chernye metally **7**, 79-85 (2023) DOI:10.17580/chm.2023.07.10
31. F.I. Panteleenko, G.V. Petrishin, V.V. Maksarov, D.D. Maksimov, Russian Engineering Research **43**, **4**, 470-473 (2023) DOI: 10.3103/S1068798X23050179
32. I.A. Brigadnov, V.V. Maksarov, J. Olt, Mechanics of Solidsthis link is disabled,58 (2), 404-414 (2023) DOI:10.3103/S0025654423700061
33. V.V. Maksarov, D.D. Maksimov, M.S. Sinyukov, Tsvetnye Metally, **4**, 96-102 (2023) DOI:10.17580/tsm.2023.04.13
34. V V Maksarov, V A Krasnyy, R V Viushin, IOP Conference Series: Materials Science and Engineering, **327**, 022047 (2018) DOI 10.1088/1757-899X/327/2/022047