Design of automated installation for soil tillage machines' disc working elements hardening

Dmitriy Dobrin[1]

[1]Bauman Moscow Technical University, ul. Baumanskaya 2-ya, 5/1, 105005 Moscow, Russia

Abstract. This article is devoted to the development of an automated unit for hardening of disc working tools by plasma-powder surfacing with powder feeding from outside the plasmatron. The introduction describes the actual problems arising during the work of soil cultivation tools. The conducted analysis of literature sources allowed to determine the main methods of increasing the resource of disc working bodies, used at present, and their advantages and disadvantages are described. As one of the methods of increasing the resource of disc working tools the method of plasma-powder surfacing with vertical arrangement of plasmatron and powder feeding through the plasmatron is considered. The method of high-speed plasma-powder surfacing with powder feeding from outside the plasmatron into the zone of the highest temperatures of the plasma arc by means of a doser of the original patented design was chosen for the creation of the present installation. The control scheme of the installation elements is developed and presented in graphic form. The principle of operation of the main units and components of the installation is described. The basic questions of modularity and variability of application of installations of such class, and also prospects of their development at the enterprises of agrocomplex are disclosed. In the discussion the actual issues of labour conditions of the plant operator are touched upon. The conclusion presents the main conclusions on the work carried out and the developed plant.

1 Introduction

Modern soil tillage machines are highly productive and heavily loaded units. During the period of farmland preparation and after harvesting crops, one of the most frequently used aggregates recently becomes a disc harrow, the main task of which is qualitative shredding and mixing of crop residues with soil. In the process of operation, disc working bodies lose sharpness of cutting edge, which leads to a decrease in the quality of work performed [1-2].

The ongoing research [3], has shown the availability on the market of soil tillage machine working elements a large number of parts (more than 55%), hardened by methods of volume hardening and surface hardening with high frequency currents. The disadvantage of these methods is relatively low increase of wear resistance of cutting edges hardened by these methods. Due to the possibility of full automation of the processes of volume hardening and hardening with high frequency currents, these methods have become widespread among manufacturers. The methods of hardening of working tools with the use of cladding methods are widespread mainly for parts made of thick-walled metal, such as chisels and plough shares, field boards, blades of deep loosening machines and others. One of the most

promising technologies, as noted by most authors, is the technology of creating a bimetallic blade with self-sharpening effect using the plasma-powder cladding method [4-7]. The use of plasma powder cladding is widespread in repair production for the restoration of worn parts of the "shaft" type [8-10]. The works of authors [11, 12] are devoted to the development of coatings and the method of application by means of plasmatrons with vertical arrangement and powder supply by means of transporting gas through the plasmatron. However, this method is less widespread for hardening the working elements of soil tillage machines and is not applied in mass production due to the complexity of automation of the process.

Increasing productivity, reducing temperature effects on the base metal, as well as automation of all processes of this method is one of the most promising tasks facing modern production of disc working tools.

2 Materials and methods

The most suitable method for creating wear-resistant coatings with high productivity and the lowest temperature effects on the base metal is currently the method of high-speed plasma-powder surfacing with powder feeding into the plasma arc zone from outside the plasmatron.

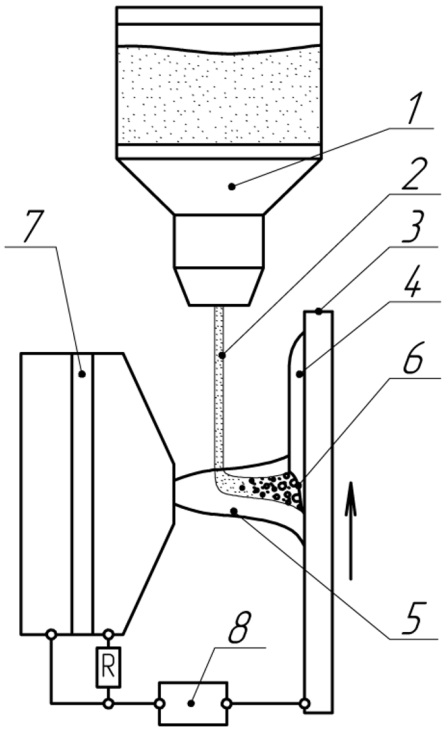

Fig. 1. Scheme of plasma-powder surfacing with feeding from outside the plasma torch

In contrast to the traditional technology of plasma-powder surfacing with powder feeding through the plasmatron, this technology provides gravitational powder feeding directly into the plasma arc zone, into the zone of the highest temperatures, which provides more intensive melting of powder particles in the plasma arc column due to the powder passing through its highest temperature zone [13, 14]. The presented cladding scheme (Fig.1) contributes to the increase in the homogeneity of the clad layer, as well as to the reduction of powder losses.

The scheme of plasma-powder surfacing shows the following elements: 1 - powder feeder; 2 - powder flow; 3 - detail; 4 - hardened layer; 5 - plasma arc; 6 – welding bath; 7 - plasmatron; 8 - welding current source. One of the most important advantages of the gravitational scheme of powder feeding into the plasma arc zone is the absence of a transporting gas and a complex internal system of powder distribution channels in the nozzle of the plasma gun, which reduces the cost of production of the plasma gun, as well as increases its service life due to the lack of adhesion of molten particles on its nozzle [15].

The main task in workpiece hardening is to ensure high quality of the clad layer, which requires maintaining all the required modes of the cladding process. To achieve this goal, it is advisable to develop universal automated plants, where all processes are controlled by automation, which increases the productivity of the process.

3 Results

A three-axis CNC milling machine was used as a basis for the creation of an automated plasma-powder cladding unit for the hardening of disc workpieces. The control scheme of the plasma-powder surfacing machine is shown in Figure 2. The diagram shows the following elements: 1 - head unit; 2 - control board; 3, 4, 5 - stepper motor drivers for X, Y and C axes; 6 - stepper motor for X axis movement; 7 - stepper motor for Y axis movement; 8 - rotator; 9 - plasmatron; 10 - powder feeder; 11 - cooling unit; 12 - liquid flow sensor; 13 - welding current source; 14 - plasmatron switching module.

The head unit is a computer with Windows operating system, thus control of movements and switching on of all units of the installation is carried out by NC studio programme complex, as well as by control board. The control board consists of two modules: the first module is installed directly on the computer motherboard in the PCI connector; the second module is installed in the control electronics cabinet and transmits signals to stepper motors to move the unit along the specified axes, as well as start and stop the cladding process.

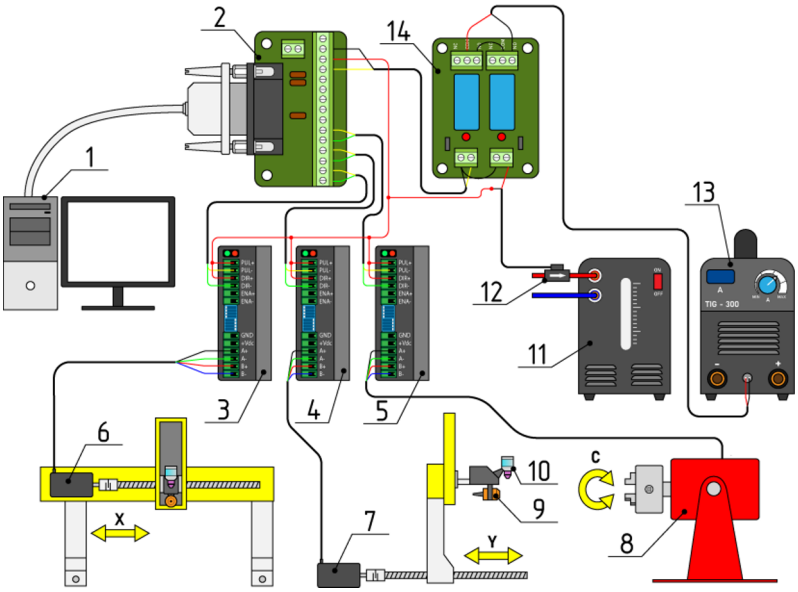

Fig. 2. Scheme of plant control

The kinematics of the machine taken as a basis was envisaged to control only three axes: X, Y, Z, whereas for the ring surfacing process on disc workpieces it is necessary to provide

a rotation axis. In order to realise the rotation, it was proposed to convert the Z-axis into the C-axis of rotation by means of using an in-house designed rotator with a stepper motor and changing the settings of the Z-axis in the control program. The design of the rotator provides for maximum compatibility with this installation, for this purpose a stepper motor identical to the one installed for Z-axis movement was used. For ease of installation, bores in the supports are made at a distance coinciding with the T-slots on the table of the working area of the machine.

Instead of a spindle, a plasma-powder cladding unit consisting of a plasma gun and a powder feeder is mounted on the machine. The powder feeder, developed in the federal scientific research center VIM of patented design is made in the form of a hopper with a transparent cylindrical wall for visual control of the powder volume [16]. Switching on and off the powder supply is provided by means of a shut-off needle driven by a linear solenoid. The retracting solenoid is connected to an AC power supply, which reduces the risk of powder clogging in the area of the shut-off needle and improves the quality of powder passage through the shut-off valve. Stabilisation and formation of a laminar flow of powder fed into the plasma arc is achieved by means of an interchangeable nozzle with a calibrated bores. The choice of a specific nozzle diameter depends on the type of powder used and the required cladding capacity.

The welding current source included in the system must provide a welding current of at least 300 A and have an integrated oscillator for igniting the duty arc of the plasmatron. A compact TIG welding source with a maximum welding current of 300 A is suitable for this purpose. The source is started by sending a signal to the control board to switch on the spindle, but instead of starting the spindle, the electromechanical relay on the plasma torch switching module closes. When the welding source is switched on, the feeder is switched on and the powder is fed at the same time.

For trouble-free operation of the plasma torch it is necessary to use a cooling system, this function is performed by the cooling unit. The cooling system requires special attention, operation without water circulation in the system is strictly prohibited, plasmatron without cooling burns out in a few seconds. To prevent the plasmatron failure, the cooling system has a safety system, which is a liquid flow sensor and plasmatron switching module with an additional relay controlled by the sensor. The sensor is built into the cooling system and in the absence of coolant flow, the relay interrupts the control circuit of the welding source, thus prohibiting the plasmatron from starting.

4 Discussion

One of the advantages of the developed unit is its modularity, for example, to realise the process of hardening by electric arc cladding with flux cored wires it is enough to replace the cladding module with a holder for the burner of a semi-automatic apparatus.

Application of such type of installations will allow to increase the resource of disc working tools not only at the enterprises producing disc working tools, but also on farms. The most promising direction of development of these installations is the creation of affordable and small-size installations for hardening of disc working tools for medium and large farms, where the average consumption of disc working tools exceeds 50 pieces per year. One of the main indicators for such enterprises is the payback period of the equipment. If the equipment is loaded with more than 50 peened discs per year, the payback period will be less than 5 years. This indicator can be reduced by developing an additional stock of peened or reconditioned parts to be sold to other farms.

5 Conclusions

The developed unit will allow one to perform hardening of disc working tools with high quality and accuracy of all technological parameters. Thanks to the high degree of automation, the process productivity increases, the harmful impact, and the load on the operator are reduced. Due to the plasmatron with external powder feeding, the possibilities of using powders with different granulation and composition are expanded. The use of plasma-powder surfacing allows us to create original coatings by using powders of our own production.

References

1. S.A. Sidorov, V.N. Zavolinsky, Technical service of machines **1(134),** 179-193 (2019)
2. N.M. Ozhegov, et.al., Proceedings of GOSNITI **121**, 273-281 (2015)
3. D.A. Dobrin, Technical service of machines **4(149),** 111-117 (2022)
4. A.Yu. Izmailov, et.al., Metsl Science and Heat Treatment **59**, 3-4, 208-210 (2017)
5. S.A. Sidorov, et.al., Metallurgist **61**, 11-12, 1023-1028 (2018)
6. N.M. Ozhegov, D.B. Slinko, Repair. Restoration. Modernisation **3,** 34-38 (2017)
7. Jingbo Liu, et.al., Journal of Materials Research and Technology **26**, 5347-5359 (2023)
8. N.A., Dragunov D.B. Slinko, *Development of the technology for restoration of the parts of the "shaft" type by plasma-powder cladding*, In Proceedings: MashTech 2022. Innovative technologies, equipment and material blanks in mechanical engineering. proceedings of the International Scientific and Technical Conference. Moscow, p. 295-297 (2022)
9. S.I. Fomin, et.al., Technics and equipment for rural areas **5(275),** 38-41 (2020)
10. R.A. Latypov, et.al., Modern Materials, Engineering and Technology **2 (5),** 146-150 (2016)
11. S.A. Sidorov, et.al., Welding production **10**, 35-40 (2015)
12. S.A. Sidorov, et.al., Metallurgist **60**, 11-12, 1290-1294 (2017)
13. D.B. Slinko, et.al., Electrometallurgy **9,** 9-15 (2022)
14. Pat. No. 2479392 C2 RF: B23K 9/04. Method of plasma cladding / Ozhegov N.M., Pazyna V.P., Kaposhko D.A., Barmashov A.V.; Applicant and patentee Ozhegov Nikolay Mikhailovich; 2011114188/02; applied. 11.04.2011; published 20.04.2013, Bulletin No. 11.
15. D.B. Slinko, et.al., M. Trudy GOSNITI **121**, 243-249 (2015)
16. Pat. No. 2607679 C1 RF: B23K 9/32. Powder feeder for plasma-powder surfacing / Soloviev S.A., Nikitin A.S., Slinko D.B., Persov E.D., Tyalina E.V., Kiryakova O.I.; Applicant and patentee federal state research center VIM; 2015133779; applied. 12.08.2015; published 10.01.2015, Bulletin No. 1.