Effect of liquid surface tension coefficient on spray cone structure of ejection sprayer

Vladimir Arkhipov, *Sergey* Basalaev, *Nikolay* Zolotorev, and *Ksenia* Perfil'eva*

National Research Tomsk State University, 634050, Lenin Avenue 36, Tomsk, Russia

Abstract. The results of an experimental study of the effect of surfactants on the spatial distribution of droplet concentration in the spray cone of the ejective sprayer are presented. The spectral transparency method and a setup providing scanning the cross-section of the spray cone along its length are used for the study. It is shown that when surfactants are incorporated into distilled water, the radial distribution of the droplet concentration in the spray cone becomes more uniform, and the cone maximum length increases.

1 Introduction

Currently, a large number of technical systems and technological processes include the dispersion of liquids, in particular, spraying of fuels in internal combustion engines and liquid rocket engines, irrigation and fire extinguishing systems, powder metallurgy, chemical technology, etc. [1–3].

The spray cone structure is determined by its length and radial distribution of the droplet concentration in different sections. Main factors affecting the spray cone structure are the method of spraying the liquid, special features of the sprayer design, physical properties of the sprayed liquid, and environment [4]. There are a large number of methods for spraying various liquids, but the most widely used are pneumatic methods based on the interaction of a liquid with a high-speed gas flow. From the variety of designs of pneumatic sprayers, ejective sprayers can be noted [4].

One of the main characteristics of the liquid that affects the spray cone structure is its surface tension coefficient. To measure the liquid surface tension coefficient, surfactants are most widely used.

An analytical review of classical and modern scientific and technical literature on the study of the generation of liquid droplet aerosols with a given dispersed composition showed that the main amount of data is devoted to the study of various designs of spraying devices. Authors of works [4–6] noted that physical properties of the liquid during spraying change insignificantly, therefore, they have a relatively weak effect on the dispersion process compared to changes in spraying methods and sprayer designs.

A limited number of works [7–10], in which the process of liquid dispersion by jet nozzle is mainly considered, have been devoted to the study of the effect of changes in the surface tension coefficient on the spray cone structure. It has been determined that the surfactants are incorporated into water leads to a decrease droplet size in the spray cone, but at the same time, the process of disintegration of various solutions water with surfactants does not change and remains similar to the disintegration of "pure" water.

To increase the efficiency of processes of mixing and combustion of liquid fuels in internal combustion engines and liquid rocket engines, it is necessary to perform additional studies on the effect of the liquid surface tension coefficient on the structure of the spray cone of the ejective sprayer.

The present work demonstrates the results of the experimental study of the effect of surfactants on the spatial distribution of droplet concentration in the spray cone of the ejective sprayer.

2 Experimental setup and research methodology

To study the effect of the liquid surface tension coefficient on the spatial distribution of droplet concentration in the spray cone of the ejective sprayer, an experimental setup [11] including a spraying device, liquid and gas supply systems, and an optical diagnostic system was used.

A block diagram of the experimental setup for studying the spray cone structure by non-contact optical method is shown in figure 1. The liquid supply system included a measuring tank with working liquid and a pipeline. The gas supply system consisted of a compressor, a flask range, and a pipeline. A rotameter was used to measure the gas flow, and reference pressure gauges were used to control pressure. The optical diagnostic system consisted of a sensing laser, a rotating angle reflector, two coaxially mounted convex lenses, a photodetector, and an oscilloscope with an electronic amplifier.

* Corresponding author: k.g.perfiljeva@yandex.ru

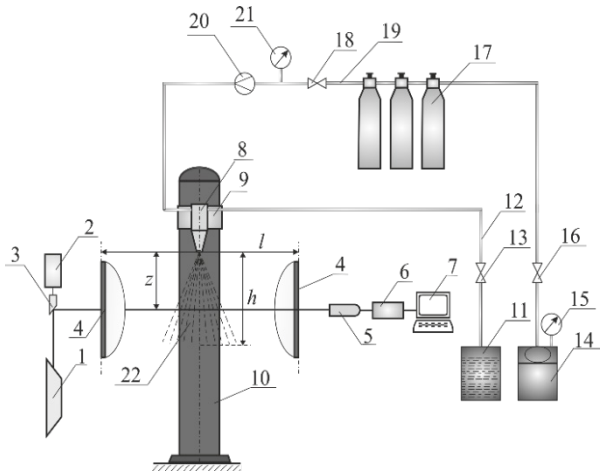

Fig. 1. Block diagram of the experimental setup for studying the spray cone structure by non-contact optical method:
1 − sensing laser; 2 − electric motor; 3 − angle reflector; 4 − lenses; 5 − radiation receiver; 6 − oscilloscope; 7 − computer; 8 − sprayer; 9 − movable carriage; 10 − rod; 11 − tank with working liquid; 12 − silicone tube; 13, 16, and 18− stop valves; 14 − compressor; 15 and 21 − pressure gauges; 17 − flask range; 19 − flexible pipe; 20 − rotameter; 22 − spray cone.

During the experiment, the spraying device was mounted on the movable carriage with the possibility of moving along the rod in the direction of the symmetry axis of the sprayer. After that, the sensing laser and the electric motor of the angle reflector were switched on. The sensing laser beam reflected from the rotating angle reflector passed through the symmetry axis of the coaxially mounted lenses and fell on the radiation receiver. Then, the spray cone of the ejective sprayer was formed by simultaneously supplying liquid and gas to the spraying device. The optical system used in the described setup provided scanning of the spray cone cross-section along its entire length.

The signal from the radiation receiver was registered with an AKIP-4107/2 oscilloscope with a relative error ~ 3 % connected to a computer.

An LGN-118-3B gas laser with an emission wavelength $\lambda = 0.6328$ μm and a power $W = 10.5$ mW was used as the sensing laser, and an FDK–155 photodiode worked in photovoltaic regime with a relative error ~ 3 % was used as the radiation receiver. The distance between the lenses was $l = 57.5$ cm.

Two ejective sprayer modifications were studied as a spraying device: a sprayer F1 with a gas passage in the form of a convergent nozzle and a sprayer F2 with a tangential gas supply. Figure 2 shows a photograph of main parts of the ejective sprayers, and figure 3 shows the pattern of gas supply to the sprayers F1 and F2.

The spectral transparency method was used to study the structure of the spray cone of the ejective sprayer. The method was based on measuring the spectral transmittance during laser scanning along the chords of the ejective sprayer cone in a given cross-section along its length. The radial distribution of the mass droplet concentration was determined using the inversion of the Abel integral equation.

Fig. 2. Photograph of main parts of the ejective sprayer.

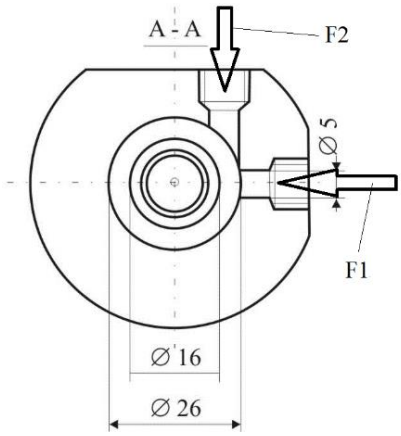

Fig. 3. Pattern of gas supply to the sprayers F1 and F2.

The distribution function $\bar{C}(\bar{r})$ of the droplet mass concentration in the spray cone was defined as [12]

$$\bar{C}(\bar{r}) = -\frac{1}{\pi}\int_{\bar{r}}^{1}\frac{\tau'(\bar{y})}{\sqrt{\bar{y}^2-\bar{r}^2}}\,d\bar{y},\ \bar{r}\in[0,1], \qquad (1)$$

where $\bar{C} = C/C_{\max}$ and $\bar{r} = r/R$ are dimensionless quantities; r is the radial coordinate; R is the radius of the spray cone boundary in the examined cross-section; $\tau'(\bar{y}) = \ln(1/T(\bar{y}))$ is the optical density of an axisymmetric inhomogeneous spray cone from $\bar{y}$; $\bar{y} = y/R$ is a dimensionless quantity; y is the distance between the beam line of the sensing laser and the spray cone center.

The dependence of the transmission coefficient $T(\bar{y})$ of the spray cone was approximated by the function

$$T(\bar{y}) = T_0 + a\bar{y}^b\,\mathrm{e}^{-c\bar{y}}, \qquad (2)$$

where a, b and c are the approximation coefficients.

While

$$\bar{y} = 0:\quad T(0) = T_0, \qquad (3)$$

$$\bar{y} = 1:\quad T(1) = T_0 + a\,\mathrm{e}^{-c} = 1, \qquad (4)$$

function (2) will take the form

$$T(\bar{y}) = T_0 + (1-T_0)\bar{y}^b\,\mathrm{e}^{c(1-\bar{y})}. \qquad (5)$$

3 Results of the experimental study

The effect of the liquid surface tension coefficient on the spatial distribution of the droplet concentration in the spray cone was studied experimentally using an ejective sprayer with a gas passage in the form of a convergent nozzle (gas supply pressure $p = 0.3$ MPa; gas and liquid flow rate $G_g = 5.4$ m^3/h and $G_l = 1.07$ g/s, respectively) and an ejective sprayer with a tangential gas supply (gas supply pressure $p = 0.3$ MPa, gas and liquid flow rate $G_g = 5.1$ m^3/h and $G_l = 2.41$ g/s, respectively).

In the present work, to identify the effect of surfactants, the structure of the spray cone was considered only at one fixed distance from the sprayer nozzle cutoff to the measuring volume ($z = 10$ cm).

Distilled water was used as a liquid. The density of distilled water $\rho_l = 998$ kg/m^3 was measured with a hydrometer with a relative error $\delta\rho_l = 0.1$ %.

The dynamic viscosity coefficient of distilled water $\mu_l = 1.002 \cdot 10^{-3}$ Pa·s was measured with a ball pressure viscometer HÖPPLER KD 3.1 with a relative error ~ 2 %. The method is based on measuring the velocity of immersion of a solid spherical particle into the investigated liquid in a cylindrical tank. The velocity of immersion of a solid spherical particle is proportional to the liquid viscosity. The device is equipped with a built-in microprocessor, which automatically measures the velocity of immersion of the particle and displays as an indicator of the liquid dynamic viscosity [13].

To reduce the surface tension coefficient of distilled water in the range $\sigma = (71.25 \div 35)$ mN/m, anionic (sodium dodecyl sulfate) and nonionic (synthanol ALM-10) surfactants were used. The surface tension coefficient of solutions distilled water with surfactants measured by static ring tear-off method using a tensiometer K6 KRUSS with an error of no more than 0.25%. The method is based on measuring the maximum force to tear off a ring with a known geometry (wetting length) made of a well-wetted material. When the ring is lifted, the liquid tries to drain from its surface, which leads to a slow thinning of the liquid film and to tear off a ring [14].

Temperature of the environment and solutions of distilled water with surfactants was 20°C.

Prior to the experiments, the solutions of surfactants with a given concentration in distilled water were prepared. To prepare solutions of surfactants in distilled water, a magnetic stirrer was used. After mixing, the solutions were evacuated and left for a day at room temperature of 20°C until they were completely dissolved.

Figure 4 shows the dependences of the surface tension coefficient of surfactant solutions in distilled water on the mass concentration C_m of sodium dodecyl sulfate (*a*) and synthanol ALM-10 (*b*) [15, 16]. From the data shown in Figure 4, it follows that the incorporation of surfactants leads to a decrease in the surface tension coefficient of the solution to the critical micelle concentration (CMC) point. Whereas, when the CMC point is reached, an increase in the concentration of surfactants in the solution does not affect its surface tension coefficient.

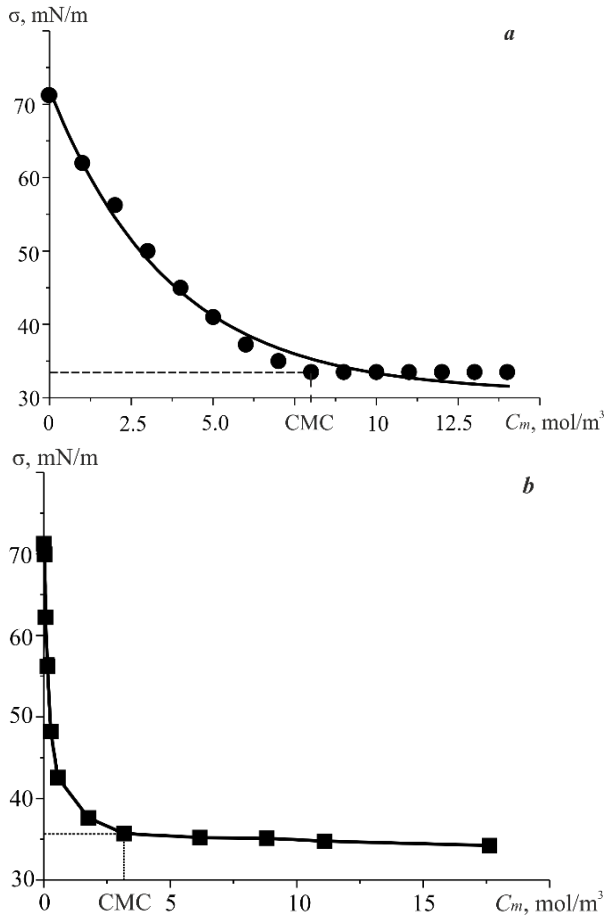

Fig. 4. Dependence of the surface tension coefficient of distilled water on the concentration of surfactants: curve (*a*) is for sodium dodecyl sulphate and curve (*b*) is for syntanol ALM-10.

The analysis of experimental data showed that a decrease in the liquid surface tension coefficient leads to a change in the structure of the spray cone of the ejective sprayer. Figure 5 and 6 show the radial distributions of the droplet mass concentration in the spray cone of the ejective sprayer with a gas passage in the form of a convergent nozzle (F1) and with a tangential gas supply (F2) when spraying "pure" distilled water, solutions of distilled water with sodium dodecyl sulfate, and distilled water with synthanol ALM-10.

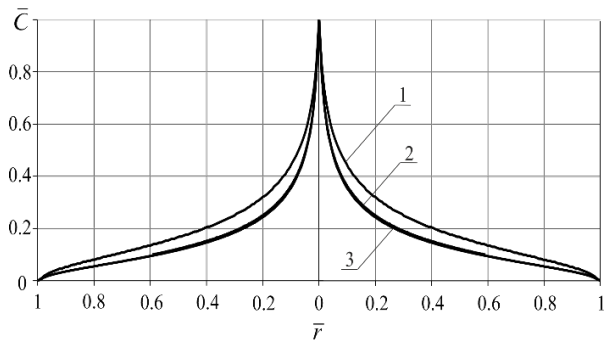

Fig. 5. Radial distributions of droplet mass concentration in the spray cone of the ejective sprayer with a gas passage in the form of a convergent nozzle:
1 − "pure" distilled water ($\sigma = 71.25$ mN/m); 2 − solution of distilled water with sodium dodecyl sulfate ($\sigma = 35$ mN/m); 3 − solution of distilled water with synthanol ALM-10 ($\sigma = 35$ mN/m).

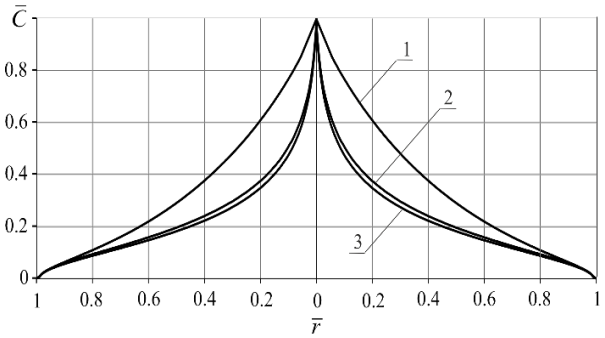

Fig. 6. Radial distributions of droplet mass concentration in the spray cone of the ejective sprayer with a tangential gas supply:
1 − "pure" distilled water (σ = 71.25 mN/m); 2 − solution of distilled water with sodium dodecyl sulfate (σ = 35 mN/m); 3 − solution of distilled water with synthanol ALM-10 (σ = 35 mN/m).

From the results shown in figure 5 and 6, it follows that in the presence of surfactants in distilled water, the radial distribution of the droplet concentration has a monotonous character with a maximum on the symmetry axis of the spray cone, as one for "pure" distilled water. The obtained results of an experimental study on the spraying of "pure" distilled water are in good agreement in overlapping ranges of determining parameters with the results of well-known works on this topic [17].

When surfactants are incorporated into distilled water, the surface tension coefficient decreases, which leads to a more uniform distribution of the droplet mass concentration in the spray cone. This effect is more pronounced when spraying solutions with an ejective sprayer with a tangential gas supply. It was also found that the change in the surfactant type does not affect significantly this phenomenon.

A decrease in the surface tension coefficient leads to an increase in the maximum length of the spray cone of the ejective sprayer.

4 Conclusions

The methodology and results of the experimental study of the effect of the liquid surface tension coefficient on the spatial distribution of the droplet concentration in the spray cone of the ejective sprayer are presented.

It has been shown experimentally that when surfactants are incorporated into distilled water, the radial distribution of the droplet concentration has a monotonous character with a maximum on the symmetry axis of the spray cone, as one for "pure" distilled water. The obtained results of an experimental study on the spraying of "pure" distilled water are in good agreement in overlapping ranges of determining parameters with the results of well-known works on this topic [17].

When surfactants are incorporated into distilled water, the surface tension coefficient decreases, which leads to a more uniform distribution of the droplet mass concentration in the spray cone. This effect is more pronounced when spraying solutions with an ejective sprayer with a tangential gas supply. It was also found that the change in the type of surfactant does not affect significantly this phenomenon.

A decrease in the surface tension coefficient leads to an increase in the maximum length of the spray cone of the ejective sprayer.

This study was supported by the Russian Science Foundation (Project No. 22-79-00092), https://rscf.ru/project/22-79-00092/.

References

1. V.N. Lukanin, K.A. Morozov, A.S. Khachayan, Internal combustion engines. Theory of Work Processes (Higher School, Moscow, 2010)
2. S.S. Savushkin, A.A. Terpigorev, S.A. Grzybowski, Melioration and Water Management **6**, 17 (2010)
3. V.D. Zakhmatov, Fire and Explosion Safety **20**, 47 (2011)
4. D.G. Pazhi, V.S. Galustov, Fundamentals of liquid atomization technology (Chemistry, Moscow, 1984)
5. D.G. Pazhi, V.S. Galustov, Liquid sprayers (Chemistry, Moscow, 1979)
6. Y.I. Khavkin, Centrifugal sprayer (Mashinostroenie, Leningrad, 1976)
7. S. Parafiniuk, M. Milanowski, A. Subr, A. Krawczuk, *Influence of surface tension of water on droplet size produced by flat jet nozzles*, in Proceedings of the IX International Scientific Symposium "Farm Machinery and Processes Management in Sustainable Agriculture", 22-24 November 2017, Lublin, Poland (2017)
8. S. Kooij, A. Moqaddam, T. De Goede, D. Derome, D., J. Carmeliet, N. Shahidzadeh, D.R. Bonn, J. Fluid Mech. **871**, 489 (2019)
9. R. Sijs, S. Kooij, D. Bonn, Phys. Fluids **33,** 113608 (2021)
10. M.I. Viedenko, K.N. Shabalin, Chem. Chem. Technol. **8**, 685 (1965)
11. V.A. Arkhipov, V.F. Trofimov, S.A. Basalaev, A.A. Antonnikova, Patent RF 2633648, Publ.: 16.10.2017
12. V.A. Arkhipov, S.S. Bondarchuk, M.Ya. Evsevleev, I.K. Zharova, A.S. Zhukov, S.V. Zmanovsky, E.A. Kozlov, A.I. Konovalenko, V.F. Trofimov, JEPTER **86,** 1229 (2013)
13. T.F. Nikulina, I.N. Vlodavets, Colloid J. **31**, 424 (1971)
14. A.I. Rusanov, V.A. Prokhorov, Interfacial Tensiometry (Chemistry, Saint Petersburg, 1994)
15. J. Zhang, Y. Meng, Tribol Lett. **56**, 543 (2014)
16. E.A. Lominoga, K.S. Burmistrov, V.S. Gevod, Issues of Chem. Chem. Technol., **3**, 52 (2014)
17. V.A. Arkhipov, S.A. Basalaev, V.F. Trofimov, N.N. Zolotorev, JEPTER **90**, 1499 (2017)