Evaluating the pressure generated on the container's bottom and walls while transporting bulk cargo

Daurenbek Ilesaliev[1*], *Zuresh* Akhmetova[2], *Aleksandr* Svetashev[1], *Azizbek* Ismatullaev[1], and *Jamol* Shihnazarov[1]

[1]Tashkent State Transport University, Uzbekistan
[2]al-Farabi Kazakh National University, Kazakhstan

Abstract. Now, the transportation of bulk cargo by rail is carried out with the help of specialized wagons. However, the use of such wagons leads to additional costs, there is a shortage of such wagons, as well as problems with technological equipment. In this regard, there is a need to find alternative technologies for the transportation of bulk cargo, which will reduce logistics costs and improve delivery. To solve this problem, it is necessary to start by determining the pressures that arise on the bottom and walls of the universal container when loading bulk cargo. This study shows that the problems associated with the transportation of bulk cargo can be successfully solved if the process of formation of such cargo is known. Thus, to solve the problem of bulk cargo transportation, it is necessary to develop alternative technologies that will reduce costs and improve delivery efficiency. This is possible if we study the process of forming bulk cargoes and analyze the pressures they create in containers.

1 Introduction

Currently, the main method of transporting bulk cargo by rail is the use of specialized wagons. However, this approach involves additional costs, and there is also a shortage of such wagons [1-2, 4-8]. In this regard, there is an urgent need to introduce alternative technologies aimed at reducing logistics costs for the delivery of bulk cargo. Here, bulk cargo refers to various goods, such as grain, coal, ore or construction materials, which are stored or transported in a loosened state.

To solve this problem, it is proposed to research and implement alternative technologies that will reduce costs and improve the efficiency of bulk cargo transportation by rail. One of the possible alternatives is the use of universal containers with appropriate inserts for various types of bulk cargo. This approach has already been successfully applied in many countries in order to optimize transportation and reduce costs.

Transportation of bulk cargo in universal containers has several advantages. Firstly, it makes possible to simplify the process of loading, unloading, and moving goods, ensuring their protection from weather conditions and damage. Secondly, the use of containers makes

* Corresponding author: ilesaliev@mail.ru

it possible to optimize the use of the railway fleet and increase capacity. Thirdly, standardization of containers and their equipment helps to reduce the time and costs of transshipment and transportation operations.

Despite the fact that the introduction of alternative technologies requires certain investments and changes in the logistics system, it has the potential to bring significant benefits in the long term. Therefore, organizations and government agencies should actively explore and support the development of such alternative methods of bulk cargo transportation in order to ensure a more efficient and sustainable transport system.

An alternative transportation system should be carried out in universal containers using a polypropylene liner. This method has been used in the world since the early seventies of the last century, so it cannot be called innovative in the broad sense of the word. But for Uzbekistan, this is a new direction in the implementation of transportation.

Indeed, the number of containers cannot be directly compared with the number of railway wagons, including grain and mineral carriers, since these are different types of vehicles and transportation systems. However, the use of universal general-purpose containers for the transportation of bulk cargo offers certain advantages. One of the advantages is that the use of general-purpose containers reduces logistics costs. Tariffs for the transportation of containers are usually lower compared to tariffs for specialized wagons for bulk cargo, on average by 10-12%. This can lead to significant savings for companies engaged in the transportation of bulk cargo.

In addition, the use of general-purpose containers provides a more flexible transportation system. Containers can be easily loaded and unloaded using cranes or specialized equipment, which simplifies the cargo handling process. Containers can also be transported to other modes of transport, such as ships or trucks, which makes it possible to use multimodal transportation and optimize logistics chains. However, when switching to the use of general-purpose containers for the transportation of bulk cargo, some factors must be taken into account. For example, it is necessary to adapt containers and their internal fillers to ensure safe and efficient transportation of various types of bulk cargo. It also requires the development of appropriate systems for loading, unloading and handling containers. In general, the use of general-purpose containers can become an alternative way of transporting bulk cargo, which can bring economic and operational advantages. Further research and practical implementation of this concept can help optimize the transportation of bulk cargo and cope with the problems associated with the shortage of specialized wagons.

2 Methodology

Bulk cargo is a mixture of solids of various shapes and sizes, which are usually in a state of mechanical contact with each other. These bodies fill the container, while gaps are formed between them, which are filled with air in dry cargo, and partially displaced by water in wet cargo [3, p. 17].

An important factor in the transportation of bulk cargo is the pressure exerted by the cargo on the bottom and walls of the container. This pressure depends on the type of container, including its height and length, as well as on the process of forming bulk cargo inside the container. Different types of containers have different geometric parameters that affect the distribution of bulk cargo pressure. The height and length of the container determine the surface area on which the weight of the cargo will be distributed. The voltage that will act on the bottom and walls of the container depends on this.

In addition, the process of forming bulk cargo also affects the pressure it exerts on the container. Different methods of filling the container can lead to different distribution of cargo inside it, which in turn will affect the pressure on the bottom and walls of the container. Understanding the pressure of bulk cargo on the container is important to ensure the safety

and stability of transportation. It allows you to determine the necessary measures to strengthen the container, select the appropriate type of container and optimize the process of loading and unloading bulk cargo. Considering these factors, when planning the transportation of bulk cargo, it is necessary to take into account the type of container and the process of cargo formation in order to ensure the safety and efficiency of transportation.

Let us first consider the pressure on the bottom and walls of a universal container (bin) with walls perpendicular to its bottom (see Figure 1), assuming that the bulk body to the closure is formed by layer-by-layer filling. The walls of the universal container should be affected by a tangential stress t, directed upwards and arising from the fact that the lower layers of the bulk cargo, settled by the weight of the above layers, move downwards relative to the fixed walls. Thus, the trajectory of the main stresses will intersect with the walls at some angle ψ. Figure 1 shows an ideally bulk load 1, which is moved by a scraper 2 along the bottom 3. Its value, as follows from the comparison of Figures 1 and 2, is determined by formula 1. The lateral pressure coefficient n can be determined by formula 2 or 3.

$$\psi = \frac{1}{2}\left(arc\sin \frac{\sin \varphi_1}{\sin \varphi} \right) - \varphi_1 , \tag{1}$$

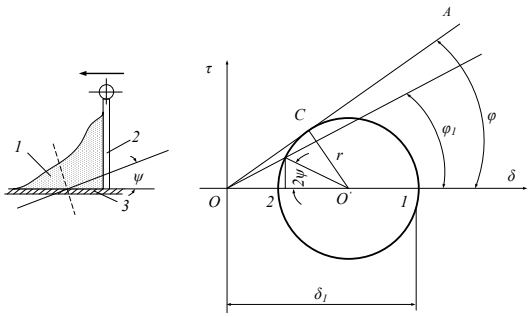

Fig. 1. Diagram for determining the angle of inclination ψ of the trajectory of the main voltage to the bottom of the container

$$n = \frac{1}{1 + 2f^2 + 2\sqrt{\left(1 + f^2\right)\left(f^2 - f_1^2\right)}} , \tag{2}$$

$$n = \frac{1}{1 + 2f\left(f + \frac{\tau_0}{\delta_б} \right) + 2\sqrt{\left(f^2 + 1\right)\left[f\left(f + \frac{\tau_0}{\delta_б} \right) - f_1^2 \right]}} , \tag{3}$$

where f is the coefficient of internal friction;
f_1 – coefficient of friction;
$\delta_б$ – lateral pressure near the bottom of the container, t/m^2;
δ_0 – vertical pressure, t/m^2;

In universal containers, in their middle part, the vertical position of the oval of normal stresses is observed. This means that the greatest intensity of stress occurs in the vertical direction, along the axis of the container. This stress distribution affects the strength and stability of the container during the transportation of bulk cargo. In addition, there is the concept of the lateral pressure coefficient, which is equal to the coefficient of mobility of the material. This coefficient indicates the ability of the material to adapt to the applied loads and

change its shape or volume. If the material has a high coefficient of mobility, then it can more easily adapt to load changes, which can improve its stability and reduce the likelihood of damage during transportation.

To illustrate the general nature of the main stress trajectories in universal containers, Figure 2, to which you refer, can be presented. Probably, this figure demonstrates how stresses are distributed inside the container and how they interact with bulk cargo. It can be a useful tool for evaluating and understanding the behavior of a container in various conditions of transportation. The study of the oval of normal stresses, the lateral pressure coefficient and the general nature of the trajectories of the main stresses is important for engineers and designers involved in the development and improvement of containers for the transportation of bulk cargo. This helps them to create more durable and reliable containers that can withstand the required loads and operating conditions.

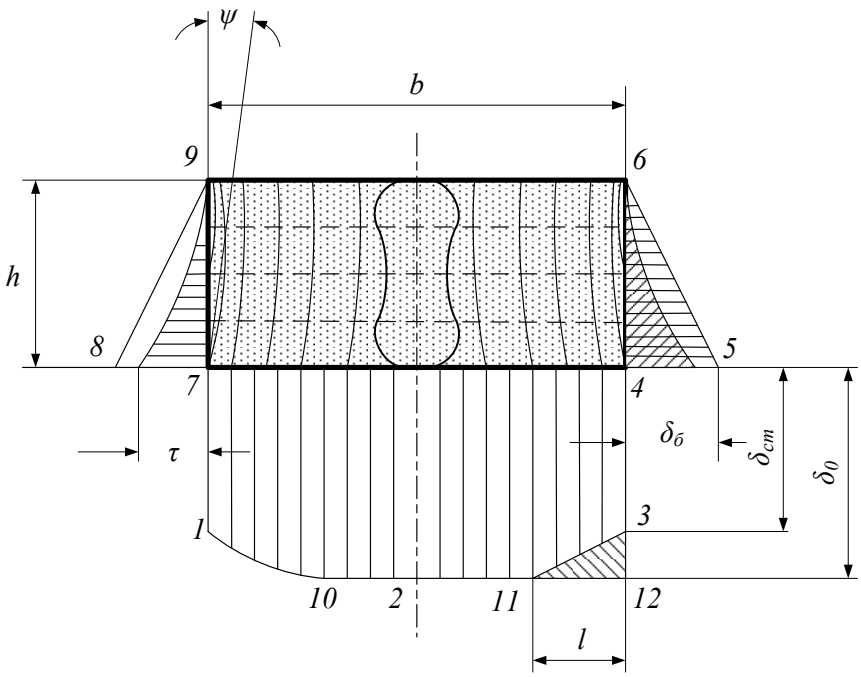

Fig. 2. Plot of pressures on the bottom and walls of a universal container filled with bulk cargo

Due to the fact that part of the weight of the bulk cargo is perceived by the tangential stress on the walls of the universal container, the area of the vertical pressure plot will be slightly less than hy b.It will be represented by the curve 1-10-12. This means that the vertical pressure is not uniformly distributed over the height of the container.

The lateral pressure plot will have the shape of a triangle, indicated by points 4-5-6. However, the vertex 5 of this triangle will be slightly rounded. This is explained by the fact that the tangential stresses in the plane of the bottom of the universal container also take on part of the lateral pressure that acts on the bottom in the center of the container.

The study of the vertical and lateral pressure diagram in universal containers is important for understanding the distribution of forces and loads acting on the container during the transportation of bulk cargo. This allows engineers and designers to improve the design and strength characteristics of the container, as well as take the necessary measures to prevent deformations and damage. The diagrams shown provide valuable information for analyzing and optimizing the operation of universal containers.

The curve 7-8-9 on the plot of tangential stresses in the plane of the walls of the universal container shows the distribution of these stresses along the height of the container. The maximum value of tangential stresses, denoted as τ, is reached at a short distance from the bottom of the container. This is due to the physical properties of bulk cargo, which cannot move freely down near the bottom. There are no frictional forces here, and, consequently, the tangential stresses are zero (τ = 0).

The distance from point 8, where the greatest tangential stress is reached, to the bottom of the universal container depends on the elastic properties of the particles that make up the bulk cargo, as well as on the height of the layer of this cargo inside the container. However, the calculation of this distance is a statically uncertain task, that is, it requires taking into account additional factors and conditions to determine a specific value. Above point 8, tangential stresses gradually decrease. This is due to a decrease in lateral pressure and a decrease in the tendency of bulk cargo particles to shift down the walls of the container. The upper part of the container experiences less tangential stresses, since the pressure from the cargo is reduced, and the particles have less tendency to move.

The study of the tangential stress diagram and their distribution inside a universal container is important for understanding the mechanical behavior of the container during the transportation of bulk cargo. This information can be used to optimize the design of the container, improve its strength and stability, as well as to develop appropriate measures to prevent damage or deformation during transportation.

Since the task of calculating bulk cargo in a universal container is statically indeterminate, therefore, we will assume that the curve of tangential stresses 8-9 is close to a parabola and that the area of the plot of these stresses is equal to $\frac{1}{3}h\tau$. We also assume that the pressure plot in the center $h\tau$.

The vertical pressure near the walls of the universal container can be determined from Figure 3, where δ_0 – denotes vertical pressure, but $\delta_б$ – lateral pressure in the center of the universal container. Since the tangential stresses along the bottom of the container are very small (due to the absence of the possibility of large displacements of bulk cargo particles along the bottom), the pressure on the walls can be considered approximately equal to the lateral pressure $\delta_б = m\delta_0$ in the center of the container. Then the point c with the ordinate $m\delta_0 f_1$ it will depict the voltage acting on the wall of the container. Having passed through this point the limiting circle of stresses with radius r, it is possible to find the value of the vertical pressure near the walls δ_{cm}. The formula for determining it will be obtained by substituting into the formula $r = f\left(\delta\sqrt{1+f^2} \pm \sqrt{\delta^2 f^2 - \tau^2}\right)$ values $\delta = m\delta_0$ and $\tau = f_1 m\delta_0$:

$$r = fm\delta_0\left(\sqrt{1+f^2} + \sqrt{f^2 - \tau^2}\right), \tag{4}$$

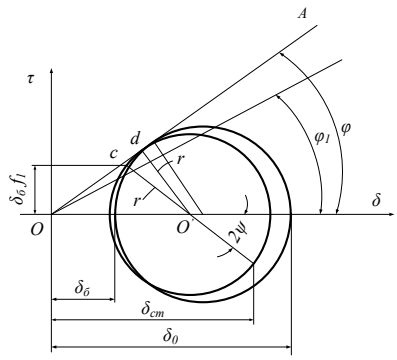

Fig. 3. Diagram of pressures on the bottom and walls of a universal container filled with bulk cargo

From a triangle *OdO'* we have:

$$\frac{\delta_{cm} + m\delta_0}{2} = \frac{r}{\sin\varphi} = \frac{r\sqrt{1+f^2}}{f}, \tag{5}$$

where $f = \mathrm{tg}\varphi$. *is*

Substituting into this formula the value *r* according to formula 4 and making a number of transformations, we get:

$$\delta_{cm} = m\delta_0 n', \tag{6}$$

where

$$n' = 1 + 2f^2 + 2\sqrt{\left(1+f^2\right)\left(f^2 - f_1^2\right)}, \tag{7}$$

The area of the shaded triangle 11-3-12 at the pressure diagram at the bottom of the container (see Figure 2) should be equal to the friction force of the bulk cargo against the wall, expressed by the equation:

$$\frac{(\delta_0 - \delta_{cm})l}{2} = \frac{m\delta_0 f_1 h}{3}$$

where *h* is the height of the container,
m*l* – plot length *11-12*.

Substituting the value into this equation δ_{cm} by formula 6 and solving the equation with respect to l, we obtain:

$$l = \frac{0{,}67 \cdot m \cdot f_1 \cdot h}{1 - m \cdot n'}, \tag{8}$$

$$\delta_б = \delta_0 m = 1{,}79 \cdot 0{,}3368 = 0{,}60\ m/м^2$$

3 Conclusion

The pressure that the bulk cargo exerts on the bottom and walls of the universal container depends on its type, as well as on the process of forming the cargo inside the container.

Different types of containers have different parameters of length, width and height, which affects the pressure distribution.

In this study, a plot of pressures on the bottom and walls of a universal container filled with bulk cargo was constructed. This plot allows you to visualize how the pressure is distributed inside the container and how it varies in height and walls.

Specifically for wheat, the following parameters were determined as a result of the study: pressure on the bottom of the container in the center, pressure on the bottom of the container near the walls, tangential stress on the walls of the container near the bottom and lateral pressure near the bottom of the container. These results are an important contribution to understanding the mechanical behavior of bulk cargo in universal containers, especially when transporting wheat. Further analysis of these results will allow us to determine the optimal parameters of the container to ensure its strength and stability during the transportation of bulk cargo. It can also lead to the development of recommendations and standards to improve the design of universal containers and ensure the safe transportation of various types of bulk cargo.

References

1. G. Arduino, D. Carrillo Murillo, F. Parola, Refrigerated container versus bulk: evidence from the banana cold chain. Maritime Policy & Management, **42(3)**, 228–245 (2013) doi:10.1080/03088839.2013.8514
2. X. Baur, L. T. Budnik, Z. Zhao, M. Bratveit, R. Djurhuus, L. Verschoor, J. R. Jepsen, Health risks in international container and bulk cargo transport due to volatile toxic compounds. Journal of Occupational Medicine and Toxicology, **10(1)** (2015) doi:10.1186/s12995-015-0059-4
3. C. A. Buchanan, M. Charara, J. L. Sullivan, G. M. Lewis, G. A. Keoleian, Lightweighting shipping containers: Life cycle impacts on multimodal freight transportation. Transportation Research Part D: Transport and Environment, **62**, 418–432 (2018) doi: 10.1016/j.trd.2018.03.011
4. D. Ilesaliev, J. Kobulov, R. Tursunkhodjaeva, M. Tashmatova, Research and Selection of Rational Parameters of a Refrigerated Container Terminal. Lecture Notes in Networks and Systems, **510**, 829–840 (2023)
5. D. Ilesaliev, J. Kobulov, N. Svetasheva, R. Tursunkhodjaeva, S. Abduvakhitov, *Optimization of transport flows of the grain storage*, E3S Web of Conferences, **402**, 01004 (2023)
6. T. Matsuda, S. Hanaoka, T. Kawasaki, Cost analysis of bulk cargo containerization. Maritime Policy & Management, **47(6)**, 736–755 (2020) https://doi.org/10.1080/030888
7. M. Shakhobiddin, I. Daurenbek, Stage of development of the railway section. International Journal of Innovative Technology and Exploring Engineering, **9(1)**, 3239–3245 (2019)
8. W. K. Talley, Ocean Container Shipping: Impacts of a Technological Improvement. Journal of Economic Issues, **34(4)**, 933–948 (2000) doi:10.1080/00213624.2000.1150