Forecasting the residual service life of the main frame and extending the service life of shunting locomotives JSC "UTY"

A.B. Grishchenko[1], *A.M.* Yusufov[2*], and *D.N.* Kurilkin[1]

[1]Emperor Alexander I St. Petersburg State Transport University, Transportation Economics Department, Moskovskij prospect, 9, 190031 St. Petersburg, Russia
[2]Tashkent State Transport University (TSTU), 100067 Tashkent, Uzbekistan

Abstract. The article is devoted to topical issues of control and calculation of residual life of the main frame of shunting locomotives operated on the railroad of Uzbekistan. Mathematical methods for calculating the residual life of locomotives are presented in the article and the expediency of extending the service life of shunting locomotives at the earliest stage of their development is substantiated. The outcomes were obtained with the help of the Solid works software environment which allows analyzing calculations and revealing forces acting on the main frame of locomotives. The mathematical description of forces acting during the main frame of locomotives is also presented. The analysis of the technical condition of the JSC "Uzbekistan Temir Yullari" locomotive fleet is conducted. The methods of main frame residual life forecasting and service life extension of shunting locomotives are investigated.

1 Introduction

The shunting locomotives in the JSC "Uzbekistan Temir Yullari" fleet have mostly reached the end of their service life. For thirty years, new shunting locomotives have hardly been purchased by JSC "Uzbekistan Temir Yullari".

Operational wear of shunting locomotives, on the one hand, and the steady trend of growth in the volume of transportation on the railway transport of Uzbekistan, on the other hand, have prompted the search for radical ways to increase the number of traction units in operation. As one of the possible ways of solving the above-mentioned problem, it was proposed to carry out major repairs with service life extension (LLW) of shunting locomotives.

In the case of diesel locomotives KRP, it implies deep modernization aimed at improving the operating properties and basic technical parameters. This approach is effective subject to a sufficiently fast payback period and implies preservation of the main assemblies (main frame, bogie frames, body, cab, etc.) that determine all layout solutions and identification number of the locomotive.

Analysis of the locomotive fleet of JSC "Uzbekistan Temir Yullari"

* Corresponding author: abdulazizyusufovv@bk.ru

The locomotive fleet of JSC "Uzbekistan Temir Yullari" is constantly replenished with modern electric locomotives of freight and passenger rolling stock. Table 1 shows the analysis of the number of locomotive fleets of JSC "Uzbekistan Temir Yullari" in 2020-2021 [8-10].

Table 1. Analysis of the number of locomotive fleets of JSC "Uzbekistan Temir Yullari" in 2020-2021

№	Type of locomotive	State of the locomotive fleet in 2020	State of the locomotive fleet in 2021
1	Electric locomotives	109	117
2	Train (mainline) diesel locomotives	94	88
3	Electric trains	18	18
4	Shunting diesel locomotives (TEM2 and ChME3)	173	173
5	Total locomotives	394	396

Fig.1 and Fig.2 show the data on the state of traction rolling stock in 2020-2021.

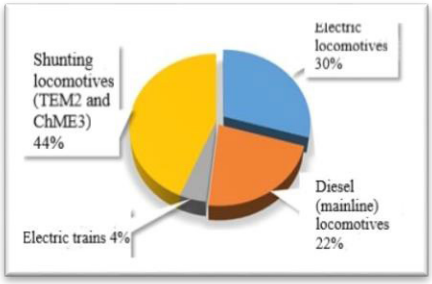

Fig.1. State of the locomotive fleet in 2020.

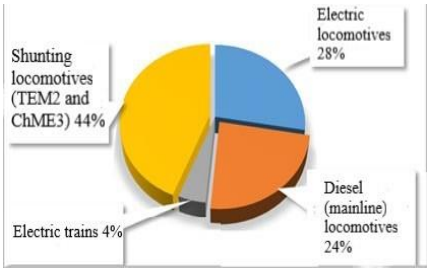

Fig. 2. State of the locomotive fleet in 2021

According to Fig.1, in 2020 the share of shunting diesel locomotives is 44%, electric locomotives 28%, diesel locomotives 24%, and electric sections 4%, and in 2021 the share of shunting diesel locomotives is 44%, electric locomotives 30%, diesel locomotives 22% and electric sections 4%.

Table 2 presents an analysis of traction rolling stock in the locomotive fleet of JSC «Uzbekistan Temir Yullari" by the duration of the operation.

Table 2. Analysis of traction rolling stock by the duration of operation of the locomotive fleet of JSC "Uzbekistan Temir Yullari".

№	Type of traction rolling stock	Up to 10 years	10 to 20 years	20 to 30 years old	Over 30 years	Total
1	Electric locomotives	44	12	30	30	116
2	Train (mainline) diesel locomotives	45	7	9	99	160
3	Shunting diesel locomotives (TEM2 and ChME3)	-	-	12	185	197
4	Total locomotives	89	19	51	314	473

Figure 3 shows a diagram of the share of traction rolling stock operating for more than 30 years since its construction.

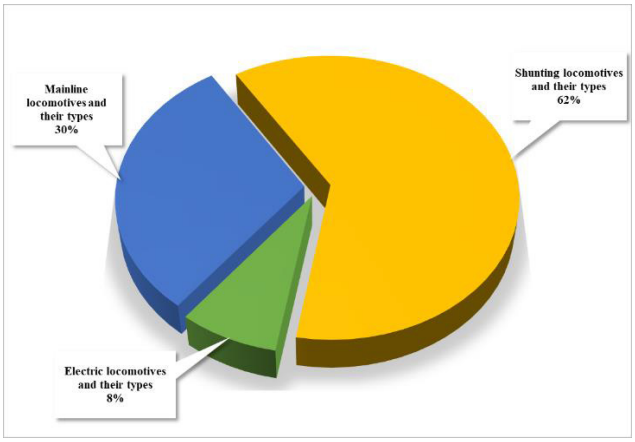

Fig. 3. Share of traction rolling stock with a service life of over 30 years

Analysis of the number of TEM2 locomotives in the locomotive fleet of JSC "Uzbekistan Temir Yullari" by periods of operation is presented in Table 3.

Table 3. The service life of diesel locomotives of the TEM2 series of the locomotive fleet of JSC "Uzbekistan Temir Yullari".

№	Type of shunting locomotive	30 to 40 years old	40 to 50 years old	Over 50 years	Total
1	TEM2	26	89	17	132

Taking into account the fact that shunting locomotives undergo regular maintenance, are operated under the conditions of loads not exceeding the permissible values, and do not experience critical longitudinal impacts, it can be assumed that despite the expiration of the standard service life, their technical resource is not yet completely exhausted. Practice shows that the actual service life of shunting locomotives can often significantly exceed the service life declared by the manufacturer. Based on the impossibility of simultaneous renewal of the entire fleet of diesel locomotives and the presence of a residual resource, it is advisable to perform an expert examination of their technical condition to substantiate the possibility of extending the service life through the renewal of worn-out equipment and strengthening of weakened load-bearing structures.

Under such circumstances, one of the most important tasks of expert inspection of shunting locomotives, formally not provided for by the current regulatory documents, becomes the assessment of the residual resource. This task is not simple and cannot be solved by carrying out typical preventive tests.

The residual service life of load-bearing structures of shunting locomotives in general at the time of the inspection is determined by the node that has the lowest residual service life [1-2]. Identification of such a node can be carried out only by a complex examination, otherwise, it is easy to make a mistake due to underestimation and underestimation of all the defects existing at the moment of the examination. Since the assessment of residual life has a probabilistic nature, to obtain a more accurate assessment, it is necessary to ensure confirmation of the alleged defects by several methods. To make justified decisions on removing shunting locomotives from operations, sending them for repair, on the scope of repair for the continuation of operation, it is necessary to obtain reliable information on the residual life of all other units, parts, and systems in addition to determining the unit with the lowest residual service life.

The greatest efficiency of the comprehensive examination of shunting locomotives can be obtained in the presence of a developed organizational and technological system for monitoring their technical condition, which would allow obtaining maximum information about the technical condition with minimal interference in the operating process.

Such a system should include:

-Specialized links staffed by highly skilled and experienced specialists working on a full-time basis;

-a fleet of high-tech modern devices;

-a well-developed and regularly updated methodological base;

-system for remote monitoring of functional parameters of operating shunting locomotives with the possibility of data archiving.

The task of extending the service life and ensuring reliable operation of shunting locomotives is solved by timely identification and elimination of defects, not allowing them to develop to such an extent that an emergency or irreversible destruction of the main units and assemblies would follow. Along with the elimination of detected defects, the known way to save service life is to slow down or stop the development of this defect.

Any shunting locomotive is a restorable product. Most of its assemblies and units can be rebuilt or replaced, and thus the service life is restored either completely (in rare cases) or partially (as a rule). There is only one component that determines the residual service life of shunting locomotives-the main frame.

Many years of experience in the use of methods for evaluating the residual life of load-bearing structures are based on the identification and analysis of stable trends in changes in the controlled parameters over a relatively long period of regular observation. Criteria, allowing us to estimate certain aspects of technical conditions, are both threshold levels of separate parameters and trends of their changes, revealed in the course of expert examinations. These studies can be carried out both experimentally and by calculation.

In recent years, analytical methods of studying the stress-strain state of locomotive load-bearing structures using solid-body modeling methods have become widespread.

2 Simulation outcomes and analysis of outcomes

The main frame of a shunting locomotive absorbs and transmits vertical, traction, impact, braking, and inertial forces to the main assemblies of the crew part [2]. The design of the main frame must ensure reliability, functionality, and traffic safety during shunting locomotive operation by the requirements of technical operation rules [5-6].

Let's consider the evaluation of the residual life of the main frame based on the TEM2 shunting locomotive [3]. A 3-D model of the main frame of the TEM2 diesel locomotive in the SolidWorks environment is shown in Fig.4.

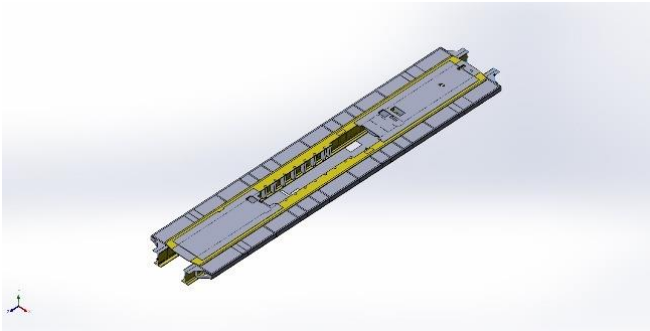

Fig. 4. 3-D model of the main frame of the TEM2 series locomotive.

When calculating the complex tensioned elements of the main frame of the locomotive, the equivalent stresses are determined, which must not exceed the allowable values set for the corresponding design mode.

Calculation forces [4]

When calculating the strength of the main frame of the locomotive, the following forces are taken into account:

-its gravity (weight) and the gravity of the equipment placed on it;
-inertial, elastic, and dissipative forces caused by the oscillations of the locomotive in motion;
-forces from the operation of traction motors and other mechanisms;
-forces associated with the traction and braking of the train;
-aerodynamic forces;
-forces occurring when the locomotive enters the curved sections of the track;
-the impact force;
-forces applied to the elements of the locomotive during repairs and emergencies.

The forces listed above are assumed to act statically when calculating the stress-strain state of the main frame of the locomotive and are given the following basic diagrams of their application:

-vertical:
-side;
-longitudinal;
-asymmetrical.

Vertical forces consist of the locomotive crew's force of gravity, the force of gravity, equipment placed on it, and, the vertical components of dynamic loads.

The dynamic vertical force from body vibrations on a spring suspension is determined by multiplying the gravity of the body, including 1/3 of the gravity of the springs of the second stage of the spring suspension, by the coefficient of vertical dynamics of this stage.

The dynamic vertical force from bogie oscillation is determined by multiplying the gravity of its cushioned mass, including 1/3 of the gravity of the springs of both suspension stages, by the coefficient of vertical dynamics.

The calculated coefficients of vertical dynamics are determined by the formula:

$$K_D = \left(\frac{0{,}006}{f_{SD}} \pm 0{,}004\right)\sqrt{V},$$

Where f_{SD}-total static deflection of the spring suspension;
V-speed of motion.

Sign " - " for body parts; " + " for bogie springs and superstructure beams.

Under the intrinsic gravity of the locomotive, the crew is understood the total gravity of its parts, plus 2/3 of the fuel and sand.

The equipment gravity is the total gravity of electrical, mechanical, and other equipment

placed inside and outside the body, as well as on carts that load the calculated element

The vertical component (additive) on the bogie and the body from the longitudinal force of inertia of the body are determined by the formula:

$$\Delta P = P_I \frac{h_K}{2L},$$

Where P_I-the inertia of the gross body;
h_K-the distance from the center of gravity of the body to the plane of the bogie supports;
2L-body base.

Lateral forces are determined by the centrifugal force, the force of wind pressure, and the dynamic interaction between the locomotive and the track in the horizontal plane.

The centrifugal force is determined separately for the body and bogies, based on an unaccelerated acceleration of 0,7 m/s2.

The wind pressure is determined by calculating the specific wind pressure on the side projection of the body (cart) equal to 500 N/m2.

Horizontal transverse (frame) forces acting on the locomotive when it enters curves are determined from the condition of equilibrium of the crew when it moves in a circular curve with the unaccelerated acceleration of 0,7 m/s2. The coefficient of friction between the wheel and the rail is assumed to be 0,25.

The maximum frame forces must not exceed 40% of the locomotive's gravity.

Longitudinal forces represent the interaction forces between the locomotive and the cars that occur when driving in the train and performing maneuvers, traction and braking forces, and the outcomeing longitudinal forces of inertia.

Longitudinal forces act on the body.

The forces of interaction between the locomotive and cars are applied for Mode I - along the axes of couplers, for Mode II-to the tail coupler of the locomotive and are balanced by the forces of inertia of the locomotive masses.

The forces of inertia acting on individual assemblies and elements of the locomotive are applied in the centers of gravity of their masses and are determined for mode II by the formula:

$$P_{ni} = F_A \frac{m_i}{M},$$

Where F_A-longitudinal force determined by traction or braking forces;
m_i-weight of a node or element;
M-mass of the locomotive.

When determining the weight of the bogie, the inertia of the rotating parts is recommended to take into account by increasing the weight of the bogie by 40%.

Inertial forces for the calculation of body-body connection details with the bogie are determined based on the acceleration of the bogie mass along the track axis equal to 3g.

Stresses in the calculated elements under the action of this force added to the static stresses from the gravity of the locomotive, must not exceed 0,9 of the yield strengths of the material.

Asymmetric forces are a system of mutually balanced relative to the diagonal of the bogie frame vertical forces applied to the axles.

Asymmetric forces are taken into account in calculations of bogies with a rigid frame or other structure capable of absorbing these forces, and are approximately assumed to be equal:

$$P_K = \Delta C_\delta,$$

Where Δ-the difference in the deflection of the axle springs of one-wheel pair;
C_δ-spring suspension stiffness in the vertical plane of a single axle box assembly.

The main vertical, lateral, and longitudinal forces when assessing the strength of the diesel

locomotive crew part according to allowable stresses are taken into account by the design modes in combinations.

The forces from the operation of the equipment installed on the locomotive must be taken into account when calculating the elements of the crew part, in which stresses arise during the operation of the equipment. The outcomeing stresses are summed up with the stresses from the main design forces by the II design mode.

Assessment of fatigue resistance and durability.

In the absence of a histogram of the amplitude stress distribution characterizing the element loading during the assigned service life and in the absence of material fatigue curve parameters, the fatigue resistance evaluation shall be carried out according to the formula:

$$n = \frac{\sigma_{-1}}{K_\sigma \sigma_V + \psi \sigma_m} > [n],$$

Where σ_{-1} -the average value of the endurance limit of the standard specimen under a symmetrical loading cycle;

K_σ-coefficient characterizing the decrease in the endurance limit of the structure about the endurance limit of the standard specimen;

σ_V-cycle stress amplitude ;

σ_m-average cycle voltage ;

ψ-coefficient characterizing the effect of cycle asymmetry;

$[n]$-allowable coefficient of resistance to fatigue.

The value of the reduction coefficient of the endurance limit is determined from the expression:

$$K_\sigma = \frac{K_1 K_2}{\gamma m} \beta_K,$$

Where K_1-a coefficient, which takes into account the effect of heterogeneity of the part material;

K_2-a coefficient taking into account the influence of internal stresses of the part. Its value depends on the transverse dimensions of the part;

γ -a coefficient that takes into account the influence of the dimensional factor;

m-a coefficient that takes into account the state of the surface;

β_K -effective stress concentration coefficient in the nodes of complex outline.

The critical stresses for the rods are determined by the Euler formula:

$$\sigma_{\text{CSE}} = \frac{\pi^2 E}{\lambda^2},$$

where E–flexural modulus;

λ -rod flexibility for $\lambda > \lambda_{\text{PL}}$,

$$\lambda_{\text{PL}} = \pi \sqrt{\frac{E}{\sigma_{\text{PL}}}},$$

σ_{PL} - compressive limit of proportionality (for steel St3 σ_{PL} = 200 mPa, for steel 09G2 σ_{PL}= 270 mPa).

Materials subjected to pure shear in the elastic strain region have critical stresses defined by the formula:

$$\sigma_{CSC} = k \frac{E}{1-\mu^2} \left(\frac{a}{b}\right)^2,$$

where k is a coefficient that depends on the ratio of the plate sides (a/b) and the conditions of its fastening.

In the combined action of compression, bending and shear, the critical stresses are calculated by the formulas:

$$\sigma_{CSC} = \sigma_{CS}\frac{c}{2\beta^2}\sqrt{c^2 + 4\beta^2} - c;$$

$$\tau_{CSC} = \tau_{CS}\frac{1}{2\beta}\sqrt{c^2 + 4\beta^2} - c,$$

where $c = \frac{\tau_{CS}}{\sigma_{CS}}$, $\beta = \frac{\tau}{\sigma}$.

The critical stresses are determined by the formula:

$$\sigma_{CS} = 0{,}18\frac{E\delta_{CK}}{R_{CK}},$$

where δ_{CK} and R_{CK}-thickness and radius of curvature of the cladding panel.

Fig. 5 and Fig. 6 show the outcomes of the calculation of the stress-strain state of the main frame of a TEM2 diesel locomotive.

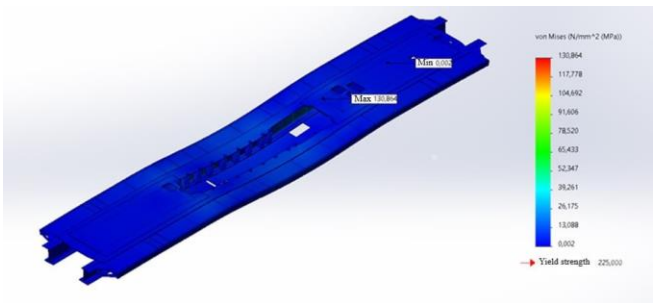

Fig. 5. Outcomes of stress calculation in the main frame of TEM2 locomotive

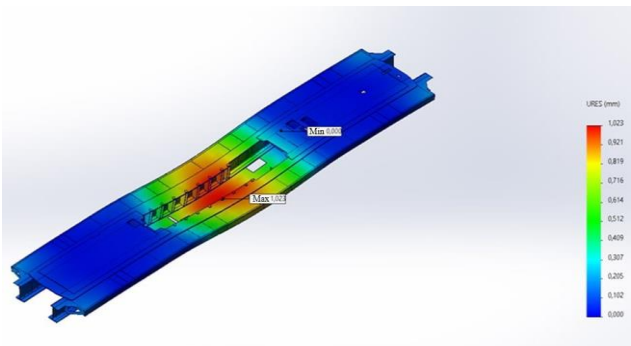

Fig. 6. Outcomes of calculation of deformations of the main frame of TEM2 diesel locomotive.

The outcomes of calculations of the stress-strain state, performed using application software packages, should be subjected to verification performed by experimental methods (tensiometer, strain-sensitive coatings, thermometry, acoustic emission, etc.), which in some cases (for example, in the absence of sufficiently accurate or proven in practice methods for complex calculation cases) can be used independently.

Determination of refined characteristics of materials is carried out on samples cut from the elements of the locomotive frame, or witness samples (in some cases, with sufficient

experimental justification, on their imitators), by the research programs made about the detected damage and operating conditions of the structural element.

Tests of samples and determination of material characteristics are carried out by normative and technical documentation. According to the outcomes of refined calculations and research of stressed - deformed state and characteristics of materials the damage mechanisms, parameters of technical state are specified, defining parameters of technical state, and criteria of limiting states are established.

3 Conclusion

The paper shows that timely detection of defects in locomotive assemblies is the basis for service life extension. It is shown that the locomotive main frame condition determines the intensity of locomotive operation, its durability, and serviceability. The presented mathematical model of calculating loads of locomotive mainframes allows us o describe the physical processes of damage and malfunctions as reliably as possible. The proposed model can be used during examination in the process of diesel locomotive service life extension.

References

1. A.V. Grishenko, V.V. Grachev, F.Yu. Bazilevskiy, M.A. Shrayber, Yu.M. Ganieva, V.V. Melnikova, Otsenka ostatochnogo resursa nesushix konstruksiy lokomotivov promishlennogo transporta UDK 629.4.
2. E.S. Oganyan, Napryajenno-deformirovannoe sostoyanie konstruksiy ekipajnoy chasti teplovozov teplovozov pri soudareniyax i avariynix stolknoveniyax, Tr. VNITI., Kolomna, **79**, 76—81 (1999)
3. V.A. Kruchek, X.R. Kosimov, Otsenka ostatochnogo resursa ram lokomotivov i prodlenie ix srokov slujbi. ISSN 1815-588X, 115-122 (Izvestiya PGUPS)
4. Prochnost podvijnogo sostava pri soudarenii, Jeleznie dorogi mira, **4**, 32—36 (2000)
5. G.S. Mixalchenko, V.N. Kashnikov, V.S. Kossov, V.A. Simonov, Teoriya i konstruksiya lokomotivov: uchebnik dlya vuzov j.-d. transporta, pod red. G.S. Mixalchenko, 584 (Moscow, Marshrut, 2006)
6. S. Abdurasulov, N. Zayniddinov, A. Yusufov, S. Jamilov, *Analysis of stress-strain state of bogie frame of PE2U and PE2M industrial traction unit*, In E3S Web of Conferences, EDP Sciences, **401**, 04022 (2023)
7. O. Khamidov, A. Yusufov, S. Kudratov, A. Yusupov, *Evaluation of the technical condition of locomotives using modern methods and tools*, In E3S Web of Conferences, EDP Sciences, **365**, 05004 (2023)
8. A. Yusufov, O. Khamidov, N. Zayniddinov, S. Abdurasulov, *Prediction of the stress-strain state of the bogie frames of shunting locomotives using the finite element method*, In E3S Web of Conferences, EDP Sciences, **401**, 03041 (2023)
9. O. Khamidov, A. Yusufov, S. Jamilov, S. Kudratov, *Remaining life of main frame and extension of service life of shunting Locomotives on railways of Republic of Uzbekistan*, In E3S Web of Conferences, EDP Sciences, **365**, 05008 (2023)