Application of variable-height beams with wooden sub-rafter elements in the roof structures of industrial buildings

Ivan Shishov[1], *Mikhail* Lisyatnikov [1,*], *Mikhail* Lukin[1], *Vladislav* Deev[1], *Evgeny* Prusov[1], *Danila* Chibrikin[1] and *Svetlana* Roshcina[1]

[1]Vladimir State University named after Alexander and Nikolay Stoletovs, Vladimir, Russian Federation

Abstract. The investigation pertains to the coating utilized in single-story industrial buildings. Frame constructions with spans of 24, 30, and 36 meters are examined, employing wood-based elements as rafter structures. The reinforced concrete rafter structures exhibit a pitch of 2-3 meters and are configured in the shape of an I-beam. The truss structures along their length are subdivided into seven sections, featuring variable lengths, flange widths, rib thicknesses, and cross-section heights. Deflection calculations consider the nonlinearity of concrete and reinforcement deformations, adhering to prevailing building codes. The elastic solutions method is employed in conjunction with the finite difference method. The proposed coating designs are distinguished by their ease of manufacturing, transportation, and element installation. The wood-composite rafter structure boasts a lower mass compared to reinforced concrete elements, facilitating installation with a lightweight crane and overall diminishing the coating's weight without compromising its structural integrity. Several beam characteristics for spans of 24, 30, and 36 meters include respective mid-span heights of 1.2 meters, 1.4 meters, and 1.5 meters; volumes of 8.23 cubic meters, 9.25 cubic meters, and 10.6 cubic meters; and weights of 19.8 tons, 22.2 tons, and 25.4 tons. The proposed solution allows for the integration of bending moment and stiffness diagrams for the rafter beam configuration.

1 Introduction

The roof of a single-story frame-type industrial building is a typical series of rafters supported by columns that span the entire span and support a ribbed slab or solid slab with a sandwich covering above it. For large spans, sub-rafter structures are used, which are located along the building to reduce the pitch between beams and provide additional support for beams in the intercolumn space. The fact that the coating structures in such buildings, as a rule, are reinforced concrete, heavy, require a lot of time to manufacture, transport and install, and the large height of the coatings increased the height of the building, led to the development of new design solutions.

* Corresponding author: mlisyatnikov@mail.ru

The authors of the article have been working for a long time on the development of cost-effective reinforced concrete coating structures, the solutions of which are reflected in a number of papers [1-5]. We proposed a beam structure in the form of a low gable frame with a prefabricated monolithic top beam, having a prefabricated monolithic top beam consisting of an end stiffener and a monolithic concrete insert that engages part of the flange of the ribbed slab.

A low-rise spatial beam structure has been developed, consisting of two flat frames connected by jumpers at the support points of the ribbed floor. The upper box-section beam, 2 m wide, is located at the height of the floor and is rigidly connected to the floor, performing both load-bearing and enclosing functions. The slope of the transverse frame of the building was increased to 18 m.

In the works of the authors of the article, frame beams are considered, consisting of two transverse walls, one of which provides maximum rigidity along the frame, and the other supports the ribbed slab in the vertical direction. Monolithic concrete is poured between the two ends of the slab, and part of the slab is placed inside the crossbar, reducing the height of the covering.

Then it was decided to make a crossbar from two flat frames and a common upper mass with a box section 1.8 m wide, which simultaneously performs load-bearing and enclosing functions. The crossbar rests on paired columns (two columns at a short distance from each other).

The cantilever system of the rafter structure of a one-story industrial building was also studied, consisting of two types of beams: the first beam rests on combined columns and has cantilevers on both sides; the second beam rests on the console of the first beam; the ends of adjacent beams of the second type are connected at the top by external reinforcing bars and are pulled when the beams are loaded, creating a unloading moment. This reduces concrete consumption and allows beams to be reinforced with reinforcement without prestressing, which reduces the complexity of manufacturing and the cost of beams.

The authors conducted an experimental study of prefabricated monolithic coverings and calculations of elements taking into account the physical nonlinearity of deformation of concrete and reinforcement, proposed prefabricated monolithic covering elements for one-story industrial buildings with spans of 18, 24 and 30 m and increased distance between columns.

In our latest research, a box-shaped covering beam 1.5 m wide, multi-stage in height, inscribed in a square parabola, performs both load-bearing and enclosing functions. The rib beams are laid at intervals of 1.5 m on the sub-rafter structure, and this gap is filled with monolithic insert slabs, forming a single ribbed covering.

Over the past year alone, a large number of scientists around the world have been studying the study of reinforced concrete beam structures. Employees of Al-Ahliyya Amman University studied the behavior of reinforced concrete beams under biaxial shear from recycled concrete [6]. Scientists from the University of Salahaddin-Erbil-Kurdistan Region conducted shear tests on normal and high-strength concrete beams reinforced with fiberglass rods and basalt macrofibers [7]. Korean researchers have developed a new method for cold-joining reinforced concrete beams using an expanded rib and spiral bars [8]. The joint work of Chinese and Italian scientists is a study of the flexural behavior of short beams made of concrete with sea sand, reinforced with bamboo sheet [9]. Scientists from Iraq, Saudi Arabia and Egypt presented the bending characteristics of concrete beams reinforced from the inside with steel, geogrid and fiberglass mesh [10]. Employees of the University of Sulaimani and the University of Salahaddin-Erbil studied the effect of basalt minibars on the shear strength of high-strength concrete beams reinforced with fiberglass [11]. Egyptian researchers conducted an experiment on the torsional behavior of beams made of hybrid fiber-reinforced concrete [12] and high-performance concrete beams reinforced with basalt fiberglass rods

[13]. Chinese researchers analyzed the flexural behavior of concrete beams reinforced with hybrid high-strength-high-strength (HSHT) and conventional steel bars [14]. Brazilian scientists analyzed the shear behavior of reinforced concrete beams made of recycled aggregate based on shear transmission mechanisms [15]. Employees of King Saud University studied the behavioral response of reinforced concrete beams with superplastic fiber cement composite layers [16]. Scientists from Indonesia determined the shear capacity of reinforced concrete beams reinforced with steel rods or steel plates connected to the lintel [17]. Researchers from Zhengzhou University studied the flexural behavior of concrete beams reinforced with high-strength steel rods after exposure to elevated temperatures [18]. Scientists from Iran have developed a theoretical model for predicting the shear strength of reinforced concrete beams with discrete or continuous transverse reinforcement [19]. Scientists from the USA studied the self-healing characteristics of reinforced concrete beams using engineered aggregates [20]. A joint effort to study the shear behavior of reinforced concrete beams reinforced with ultra-high-strength fiber-reinforced concrete (UHPFRC) was carried out by scientists from the Netherlands, China and Belgium [21]. Japanese employees from Yokohama National University assessed repaired reinforced concrete beams with rounded ends, demonstrating deterioration of adhesion under static and cyclic loads [22]. An international team of researchers from Turkey, Russia, Iraq and Brazil determined the shear strength of reinforced concrete beams made from expanded concrete using aluminum waste [23]. Indian scientists studied the behavior of the shear strength of reinforced concrete beams with a high fly ash content [24] and determined the torsional properties of reinforced concrete beams of rectangular cross-section with a U-shaped sheathing of welded wire mesh [25].

Thus, the relevance of the topic is beyond doubt. In this work, we propose the use of wooden elements to cover industrial buildings. The use of wooden elements should reduce the overall weight of the structure, simplify the manufacture of coating components and allow the work of its construction to be combined.

The rafter structure can be made of wood: it works in favorable dry conditions and can be quite durable. With a column spacing of 6 m, it can be laminated board packages resting on special column consoles and providing support for one or two rafter beams, determining their total spacing of 3 or 2 m.

It can also be a solid slab of wood. This can be a continuous flooring made from edged boards 25 or 32 mm thick, connected in a quarter, or from prepared panels 6 m long, covering two or three spans between the rafter beams (Fig. 1).

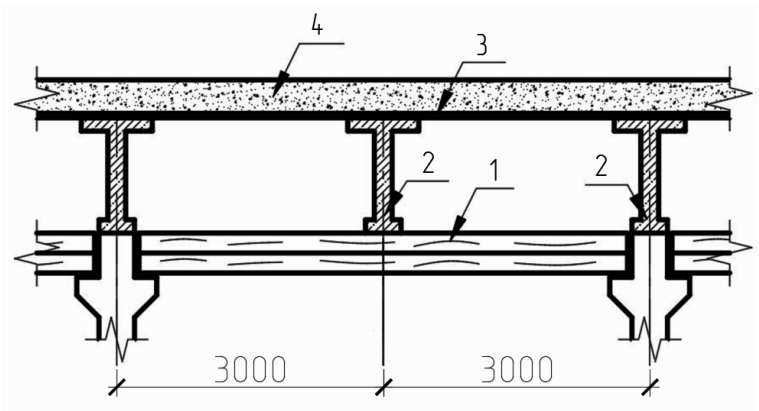

Fig. 1. Longitudinal section of the covering: 1 – sub-rafter structure, 2 – rafter beams, 3 – wooden flooring, 4 – steam-heat-waterproofing

This flooring will serve as the basis for installing insulation and waterproofing roofing carpet.

2 Methods

We considered buildings with spans of 24, 30 and 36 m, a distance between columns of 6 m and a distance between beams of 3 m or 2 m. The beams have an I-section, made of heavy concrete and reinforced with steel rods without pre-tensioning. Deflections were calculated. Nonlinearities in the deformations of concrete and reinforcement were taken into account, as shown in [1], based on the following assumptions from the standards:

1. Hypothesis of plane sections.
2. Concrete in compression zones deforms nonlinearly in accordance with standardized three-line diagram.
3. Reinforcement in tension zones is deformed in accordance with standardized two-line diagrams.
4. 4. 4. The work of concrete in tension is indirectly taken into account by the coefficient, which increases the elastic modulus E_s the reinforcement to E_s / ψ_s :

$$\psi_s = 1 - 0.8 M_{crc} / M , \tag{1}$$

where M_{crc} – moment of crack formation;
M – moment from permanent and temporary loads.

The moment of cracking is determined taking into account the inelastic deformation of concrete in the tensile zone, based on the assumptions recommended by the standards:

1. Hypothesis of plane sections.
2. In the compression zone, concrete works elastically with an elastic modulus E_b .
3. 3. In the tensile zone, the stress in concrete elastically increases to the value of the calculated tensile strength of concrete for the limit state of the second group $R_{bt.ser}$, which remains constant with further deformation.
4. The deformation of the most stressed fibers in the tensile zone reaches the limit value $\varepsilon_{bt.u}$ for short-term load.
5. Elastic deformation of reinforcement.

This problem is usually solved as follows:

- a diagram of deformations is constructed within the height of the compressed zone x ;
- a stress diagram is constructed in accordance with the deformation diagram and concrete deformation diagrams;
- the resultant stress of concrete during compression R_b is calculated on a selected part of the beam section, therefore the distance to the neutral line of the beam section can be easily determined by considering the T-shape of the section of the compressed zone.

The forces in the reinforcement are presented:

- for the stretch zone:

$$N_s = E_s A_s \varepsilon_s = \frac{E_s}{A_s \psi_s} \varepsilon_b \frac{h_0 - x}{x} , \tag{2}$$

– for compressed zone:

$$N_s^{'} = E_s A_s^{'} \varepsilon_s^{'} = E_s A_s^{'} \varepsilon_b \frac{x - a'}{x}, \tag{3}$$

An equation is created $N_b + N_s^{'} - N_s = 0$ in the form $ax^2 + bx + c = 0$. By solving it, the height of the compressed zone x is determined, the bending moment M, the curvature of the curved axis of the beam $k = \varepsilon_b / x$ and the rigidity $g = M / k$ are determined.

Let us introduce the following assumptions. The beams are hinged. The resulting bending moment continuously changes depending on their span. In order to control the increase in curvature and deflection, the stiffness of the beams must also change in accordance with the bending moment diagram. Therefore, three factors for changing stiffness were proposed: the height of the beam section, the thickness of the rib and the width of the flange in the compressed zone. This problem is solved by the method of approximations. The length of the beam is divided into sections, and within each section these factors remain constant and change only when passing through a new section. The length of the sections should be such that the bending moment ratio decreases from the supports to the center of the span when the beams are hinged. Based on this and the results of preliminary calculations, seven sections with lengths are identified: 2Δl, 3Δl, 4Δl, 12Δl, 4Δl, 3Δl, 2Δl, starting from the left support, height 1.15, 1.2, 1.3, 1.4, 1.3, 1.2, 1.15 m respectively. Here Δl is the cost of dividing the beam into parts in the finite difference method.

At the beginning of the calculation for each section, the deformations of the outermost fiber in the compression zone from $\varepsilon_b = 0.00001$ before $\varepsilon_b = 0.0035$ in increments 0.00001. The calculation results (moment value, deformation, curvature of the curved axis and beam stiffness) are entered into tabular forms. Then the method of elastic solutions is applied in combination with the finite difference method. In each elastic solution, the beam is divided along its length by points j=1,2,3,…n into small parts of length Δl. The beam deflections at these points are taken as the main unknowns; they are determined from the solution of the system of equilibrium equations of small parts Δl, taken in the vicinity of point j. The curvatures of the curved axis of the beam are determined from the deflections, and from them the lines in the table are determined from where the stiffnesses for the next elastic solution are taken, individually for each point j=1,2,3,...n. The solution shows reliable results.

3 Results and Discussion

Figure 2 shows the cross-sectional dimensions of three beams with lengths of 24, 30 and 36 m.

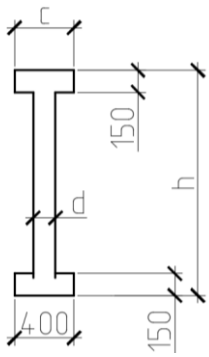

Fig. 2. Designation of cross-sectional dimensions of rafter beams

Figures 3, 4, 5 show the division of beams into sections; cross-sectional dimensions of each; division of beams into small parts Δl in accordance with the finite difference method and diagrams of bending moments, vertical displacements and stiffnesses. The number of parts Δl for all beams is assumed to be the same in the amount of 30 pieces, the lengths of small parts Δl as a result vary from 0.8 to 1.2 m. Heavy concrete with reinforcement without pre-tensioning is used. Calculations are performed using maximum deflections. The load on the first two beams was 0.015 MN/m (beam spacing 3 m), on the third 0.01 MN/m (beam spacing 2 m).

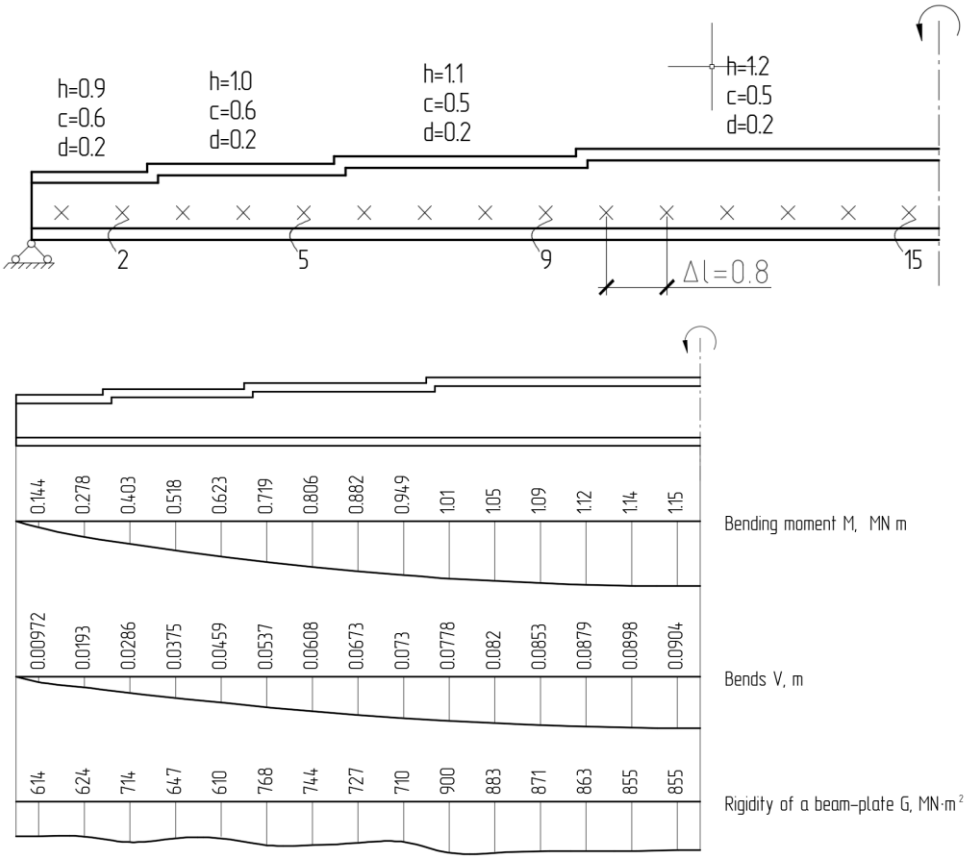

Fig. 3. Rafter beam with a span of 24 m

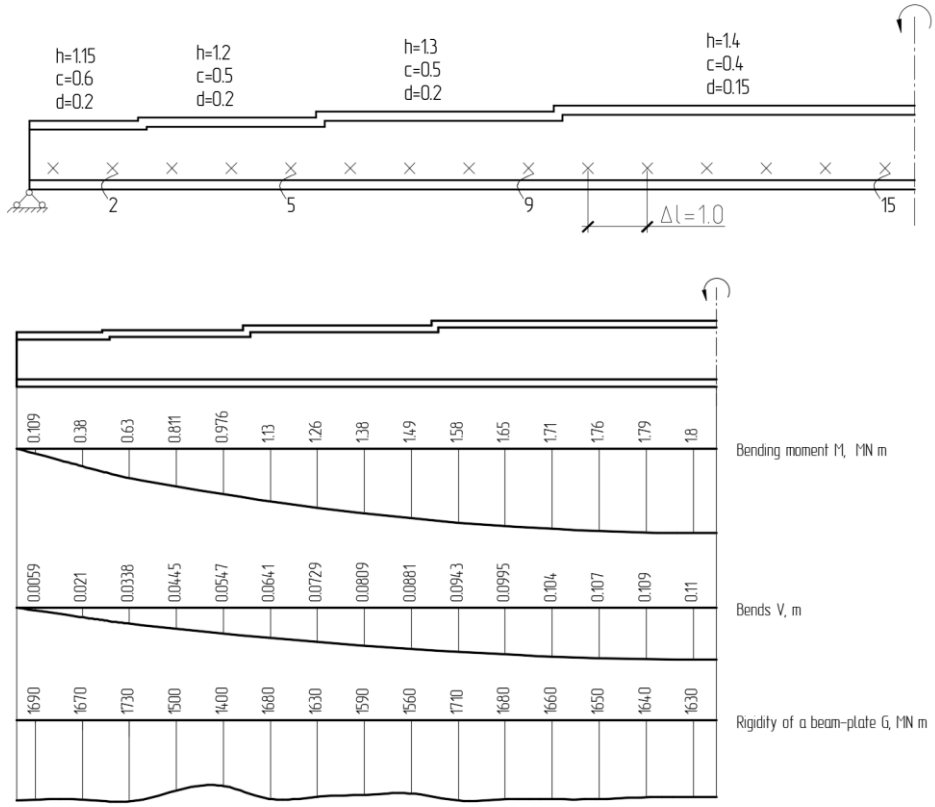

Fig. 4. Rafter beam with a span of 30 m

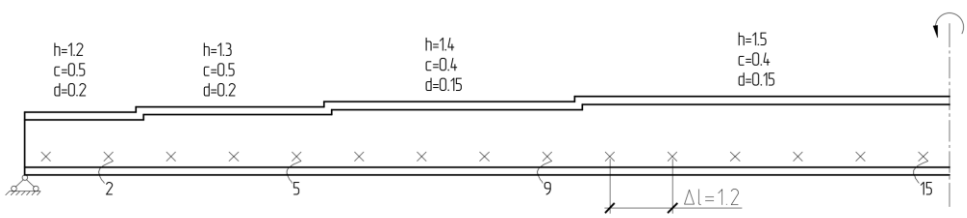

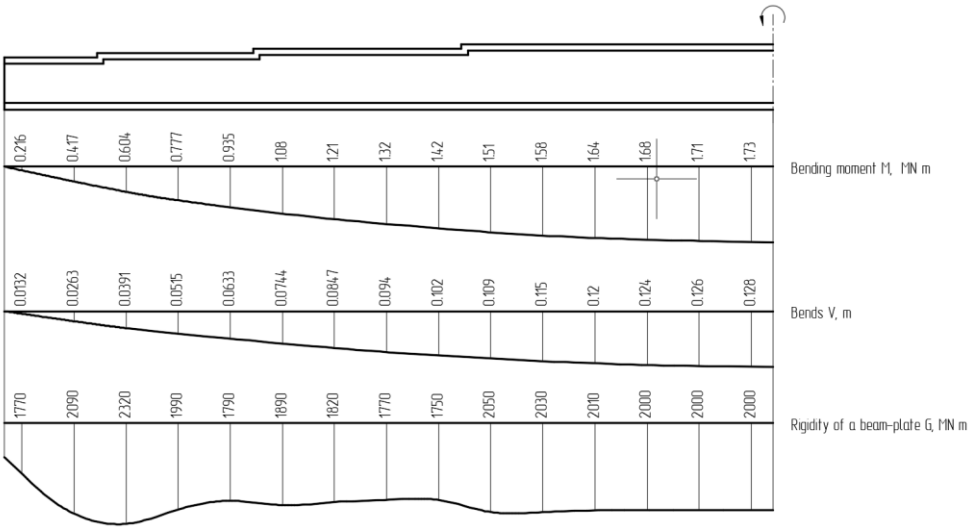

Fig. 5. Rafter beam with a span of 36 m

The maximum permissible deflections as a result of the calculation were $\frac{1}{250}l = 0.096$, 0.12, 0,144 m along beams 24, 30 and 36 m respectively. Deflections determined by calculation for the middle of the span: V=0.0904, 0.11, 0,128 m. Therefore, the stiffness of the beams is sufficient. Additional strength calculations showed that the load-bearing capacity of the rafter beams is ensured.

4 Conclusions

The proposed coating designs are characterized by ease of manufacture, transportation and installation of elements. The wood-composite rafter structure has a low mass relative to reinforced concrete elements, which allows its installation using a light crane and generally reduces the weight of the coating without compromising its strength. The rafters, 30 and 36 m long, are divided into two parts and connected in the middle of the span, i.e. where the moments are maximum and the transverse forces are zero. Boards and panels for continuous decking are fed by crane and laid on the rafters by hand. The design of the coating is convenient for combining construction operations. The required reinforcement cross-section was determined by the formula $A_s = 0.003bh_0$, where bh_0 – useful cross-sectional area of the rib, and it turned out to be approximately the same for all sections.

The same reinforcement was adopted along the entire length of the beam: $A_s = 0.00509$ m^2 – 20 Ø18 mm for span 24 m and $A_s = 0.00694$ m^2 – (10 Ø18+10 Ø22) mm for spans 30 and 36 m. This simplifies the manufacture of the beam and eliminates the loss of reinforcement for anchoring the rods.

Some characteristics of beams for a span of 24, 30, 36 m, respectively: height in the middle of the span: 1.2 m, 1.4 m, 1.5 m; volume: 8.23 m^3; 9.25 m^3; 10.6 m^3; weight: 19.8 t, 22.2 t, 25.4 t.

The proposed solution makes it possible to bring together in configuration the diagrams of bending moments and stiffnesses of the rafter beam, which, in our opinion, is evidence of an economical solution to the problem.

In a further study, it is proposed to modernize the covering with a span of 30 m. The beams described in the article have a pitch of 2...3 m in the covering of buildings, which increases their number. We propose to install beams with a pitch of 6 m, which will be supported directly on the columns of the building. In this case, the installation of rafter structures will not be required. The height of the beams turns out to be greater than in the option proposed in the article, but not so much as to make the solution uneconomical. The rafter beam is divided along the length into sections of 4, 6, 10, 6 and 4 m, respectively. The heights of these sections are 1.4, 1.7, 1.8, 1.7 and 1.4 m. In the longitudinal direction of the workshop, wooden beams will be laid - purlins supporting a plank flooring made of edged boards 25 or 32 mm thick, connected into a quarter and forming the basis for a layered carpet of the enclosing structure. Concrete consumption per rafter beam should increase slightly from 9.25 to 10.6 m^3, but the number of beams is halved. The weight of such a beam should be 25.4 tons.

5 Funding

The research was carried out within the state assignment in the field of scientific activity of the Ministry of Science and Higher Education of the Russian Federation (theme FZUN-2020-0015, state assignment of VlSU). The study was carried out using the equipment of the interregional multispecialty and interdisciplinary center for the collective usage of promising and competitive technologies in the areas of development and application in industry/mechanical engineering of domestic achievements in the field of nanotechnology (Agreement No. 075-15-2021-692 of August 5, 2021).

References

1. M. S. Lisyatnikov, I. I. Shishov, M. S. Sergeev, and E. Hisham, in *IOP Conf. Ser. Mater. Sci. Eng.* (2020)
2. S. Roshchina, H. Ezzi, I. Shishov, M. Lukin, and M. Sergeev, in *IOP Conf. Ser. Earth Environ. Sci.* (2017)
3. I. Shishov, M. V. Lukin, and M. S. Sergeev, Lect. Notes Civ. Eng. **182**, 463 (2022)
4. S. I. Roschina, M. V. Lukin, M. S. Lisyatnikov, and M. S. Sergeyev, Izv. Vyss. Uchebnykh Zaved. Seriya Teknol. Tekst. Promyshlennosti **370**, (2017)
5. M. V Lukin, M. V Popov, and M. S. Lisyatnikov, IOP Conf. Ser. Mater. Sci. Eng. **753**, 032071 (2020)
6. R. Aldmour, N. Shatarat, and M. Abdel-Jaber, Case Stud. Constr. Mater. **18**, e02127 (2023)
7. J. H. Muhammad and A. R. Yousif, Constr. Build. Mater. **408**, 133516 (2023)
8. K. S. Kim, K. T. Park, K. S. Jung, R. E. Kim, T. Ali, and C. Park, Eng. Struct. **295**, 116863 (2023)
9. X. Xue, H. Li, U. Sayed, O. Corbi, P. Adjei, Z. Feng, and Z. Wang, J. Build. Eng. **76**, 107274 (2023)
10. A. K. Hanan, M. D. Muttashar, S. R. Abid, A. M. Yosri, F. Alsharari, and A. farouk Deifalla, J. Mater. Res. Technol. **24**, 9156 (2023)
11. J. H. Muhammad and A. R. Yousif, Case Stud. Constr. Mater. **18**, e02020 (2023)
12. M. Said, A. Salah, A. Erfan, and A. Esam, J. Build. Eng. **71**, 106574 (2023)
13. M. A. Adam, M. Said, A. Salah, and A. Elsheikh, Structures **55**, 510 (2023)
14. Y. Zhang, X. Xiong, Y. Liang, and M. He, Eng. Struct. 285, 115978 (2023)

15. J. C. Trindade, S. L. G. Garcia, T. N. Lacerda, and T. L. Resende, Eng. Struct. **293**, 116616 (2023)
16. Y. M. Abbas and M. I. Khan, J. Build. Eng. **77**, 107475 (2023)
17. R. Thamrin, Zaidir, and A. Wahyuni, Results Eng. **17**, 100953 (2023)
18. J. Zhao, Y. Jiang, and X. Li, Constr. Build. Mater. **382**, 131317 (2023)
19. M. Zakerinejad and M. Soltani, Structures **44**, 436 (2022)
20. X. Pan, B. Gencturk, H. Aryan, and B. Zhuang, Eng. Struct. 295, 116829 (2023)
21. Y. Huang, D. Gu, S. Mustafa, S. Grünewald, and M. Luković, Case Stud. Constr. Mater. 19, e02441 (2023)
22. A. I. Quadri and C. Fujiyama, Constr. Build. Mater. **403**, 133070 (2023)
23. Y. O. Özkılıç, M. Karalar, C. Aksoylu, A. N. Beskopylny, S. A. Stel'makh, E. M. Shcherban, S. Qaidi, I. da S. A. Pereira, S. N. Monteiro, and A. R. G. Azevedo, J. Mater. Res. Technol. **24**, 5433 (2023)
24. M. A. Khalid, M. Shariq, M. Arif, and A. Umar, Mater. Today Proc. (2023)
25. V. V. Mane and N. K. Patil, Mater. Today Proc. (2023)