Stability margins monitoring system performance evaluation for various methods of transfer capacity calculations with transient stability constraints

Vladimir Neuymin[1], *Eugene* Mashalov[1], *Aleksander* Aleksandrov[1], *Denis* Snegirev[2*], *Viktor* Klassen[2] and *Daniil* Teplukhin[2]

[1]JSC "STC UPS", Yekaterinburg, Sverdlovsk region, Russia
[2]JSC "STC UPS", UrFU, Yekaterinburg, Sverdlovsk region, Russia

Abstract. The purpose of this work is to determine ways to increase the performance of available power transfer capacity analysis with transient stability constraints, as well as to evaluate the accuracy of the proposed methods. A number of developed methods for performance improvement of available power transfer capacity (APTC) analysis with transient stability (TS) constraints in the stability margins monitoring system (SMMS) were discussed in this article, in particular: network reduction, transient stability analysis with implicit integration method, parallel computing of contingencies, and sequential TS simulations startup. In addition, evaluations of the method's accuracy of APTC calculations with TS constraints for various power transmissions were carried out.

1 Introduction

One of the most important properties that characterizes the SMMS is the calculation cycle duration required for the APTC. The longer this duration, the more likely the APTC calculated in the previous cycle will not correspond to the current power system state. This can cause incorrect dispatch control actions and secondary frequency control malfunctions. Reducing the duration of the APTC cycle calculation decreases the probability of this situation and brings the SMMS closer to the real-time system.

Considerable time of the calculations becomes noticeable for APTC evaluation with TS constraints. The main reason for this is the difference in analysis methods. Calculations of transient stability responses are used for large disturbances analysis, and steady state (SS) calculations are used for all other criteria.

The SMMS calculation cycle duration depends on many factors, including:

1. the server's computing performance;
2. the initial steady state before load flow continuation;
3. the power system model dimensions: nodes, branches, generators, and other elements count;
4. the number of power interfaces analyzed within the cycle;
5. the number and complexity of emergency processes (EP) – standard contingencies evaluated for each power interface;
6. the number and complexity of the simulated protection and control devices.

Some factors have a more significant impact than others. For example, the TS simulation time grows relatively faster than the SS calculation time with an increase in model dimension. Also, the complexity of emergency processes has a noticeable effect since it increases TS simulation time. The complex contingency can contain multiple automatic reclosing (AR) of the transmission lines in accordance with the requirements of the Stability of the Power Systems Guidelines [1]. The emergency process number may turn out to be about 10-15 also in accordance with these requirements.

The various approaches to accelerate APTC with TS constraints and limited computing performance are investigated in this paper.

2 The reduction of the network model

The most obvious way to shorten the time spent on TS simulation and noticeably speed up the APTC is to reduce dimension of the power system model.

It is important to keep the balance between the accuracy of the results and the simulation time while performing reduction. Accuracy deterioration is often associated with the wrong selection of elements to be reduced, or reduction method. Since the SMMS is an automatic system, it is also proposed to select the elements to be reduced automatically.

Network elements automatically selected to be reduced should not include buses, branches, and generators directly used in emergency process scenarios. In addition, reduction is not applicable to detailed generator models, such as Park's. The only generators modeled by the swing equation can be aggregated.

Various reduction methods and their performance were reported in [2]. The performance of methods in

* Corresponding author: snegirev@niipt-ems.ru

relation to the APTC problem with TS constraints was reported in [3]. It was determined that the combination of the Gauss and Zhukov methods has the best performance. The automatic selection of buses is based on their rank, i.e., the number of adjacent buses. Low rank buses are to be reduced. The automatic selection of aggregation groups is performed by combining several buses connected with low impedance branches (for example, circuit breakers) into one supernode.

3 The use of the implicit integration method for EMT calculations

TS analysis is based on the implicit integration method. It is implemented in the software package Raiden [4] and described in detail in [5]. Raiden is available as one of the backends for TS analysis for the APTC in the SMMS.

The former TS analysis software RUSTab [6] used the explicit integration method in the form:

$$y_n = F_E(y_{n-1}, h_n). \quad (1)$$

In this form, the integration step h_n is limited during the entire simulation process to maintain numerical stability and cannot be higher than the model minimum time constant, for example, the time constants of exciters or automatic voltage regulators (AVR).

For the implicit method used in Raiden the integration method has the following form:

$$y_n = F_I(y_n, y_{n-1}, h_n). \quad (2)$$

The calculation of y_n, in contrast to (1), requires the solution of a nonlinear system of equations. However, implicit methods have a much larger stability region, which allows choosing h_n that is significantly larger than the explicit methods step. As a result, the integration step can be significantly increased when the state variable oscillations decay during the simulation, reducing the number of steps required for the simulation without losing numerical stability.

The stability properties of the implicit integration method allow us to significantly reduce the time of the stable EMT simulation. The stability check for such an EP can take more than half of the total calculation time during the APTC estimation by the criterion of dynamic stability. Thus, TS simulation time can be reduced up to 3–5 times using the implicit method compared to the explicit method, depending on the case damping rate.

4 The sequential TS simulations startup

The former RUSTab package was used for the TS simulation using explicit integration methods and the APTC estimation with transient stability constraints. Its algorithm was developed for online user interaction and provides embedded tools to simplify the model data input. These tools include automatic equipment model parameter checks and corrections, and also model linking verification.

During the initialization of the EP analysis, the SS calculation, the TS differential-algebraic equations system (DAE) initial value calculation, and the updated simulation scenario setup are all completed. However, for each EP, the TS model structure setup, user data verification, and model link checks are only carried out once. The existing diagram of TS initialization in the SMMS is shown in Figure 1. The proposed procedure is displayed in Figure 2.

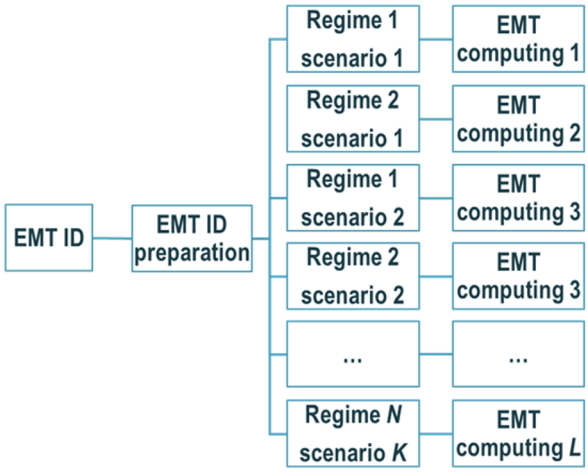

Fig. 1. Existing TS initialization

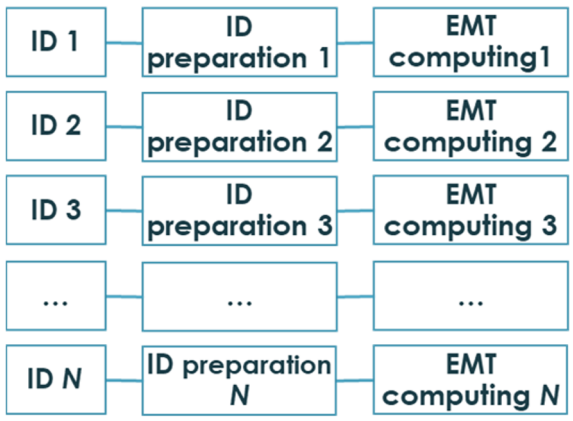

Fig. 2. Proposed TS initialization

5 Parallel EMT calculations

Parallel computing is a way of organizing computer calculations in which the problem to be solved is divided into subtasks distributed between interacting and simultaneously running computing processes [7].

The RUSTab algorithm for TS simulation already used in the SMMS supports parallel computing and vectorization, but only for the single TS case. Parallel computing efficiency can be increased by performing simultaneous TS simulations. Fig. 3 shows the existing TS simulation process. Fig. 4 shows the proposed process.

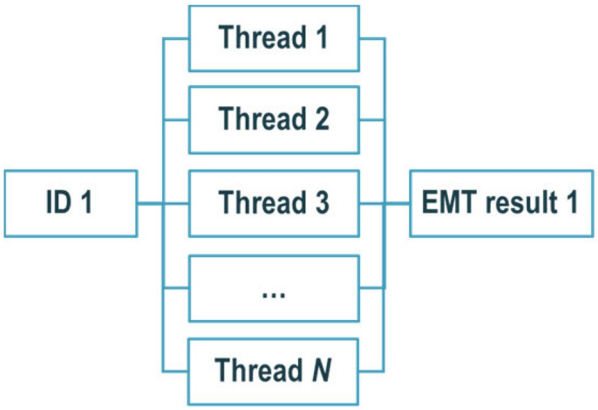

Fig. 3. Existing process of parallel TS simulations

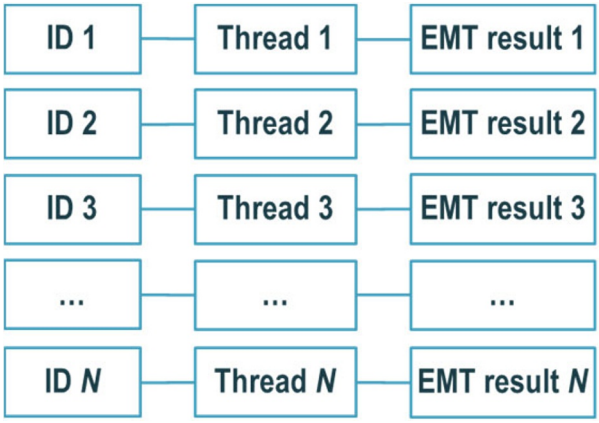

Fig. 4. Proposed process of parallel TS simulations

The existing process of parallel TS simulation can utilize up to 50-60% of computing power, spending the rest in synchronization.

In the proposed calculation procedure, the APTC state estimate creates a number of initial data variants (ID) for parallel simulations. The primary variations between these variants, in accordance with the provided continuation trajectory (CT), are the initial conditions and contingency situations. The computation of each of the prepared ID variants can be done independently in a separate thread. The calculation's outcome is whether there was a TS loss or not for each set of TS initial data. The following algorithm for parallel TS simulations is proposed to determine the APTC with transient stability constraints in the SMMS.

1. Formation of CT points.
2. Simulation tasks initialization.
3. Checking the CT points and EP combinations.
4. Aggregation of calculation results. Determining the available transfer capacity.

Fig. 5 illustrates this algorithm.

6 The acceleration methods effectiveness assessment

The following power system model is used as a test bed to assess the performance enhancements of the APTC with TS constraints: 1829 buses, 2966 branches, 438 generators with excitation systems (exciter, AVR, and discrete excitation controls, which match the particular Russian practice models), and also 66 swing equation models.

The performance improvement is the total APTC time reduction. The accuracy criterion selected is 5% proximity of APTC results in MW.

A number of computational experiments (CE) were conducted to determine the best approach to improving the performance of the APTC with TS. The following abbreviations are used to identify methods while performing computational experiments:

BC – baseline calculation used as a reference, with no proposed improvement methods;
EN – reduction with below N-rank buses exclusion;
IM – implicit integration method;
PC – parallel TS calculations;
S – sequential TS startup.

The TS simulation were conducted with the following settings: duration: 15s, minimum integration step for the explicit method: $5 \cdot 10^{-3}$s, and 10^{-8}s for the implicit method.

The APTC calculations results according with TS constraints using various acceleration methods for the considered power interfaces are given in tables 1, 2 and 3.

Table 1. The APTC calculations with TS constraints using acceleration methods for power transmission 1 results.

CE	APTC, MW	T, s	ΔAPTC, %	ΔT, %
BC	2 316.3	586.2	–	–
E1	2 314.0	582.3	–0.1	–0.7
E2	2 314.0	454.8	–0.1	–22.4
E3	2 111.3	415.1	–9.7	–29.2
IM	2 333.9	135.9	0.8	–76.8
PC	2 316.3	213.9	0.0	–63.5
S	2 316.3	563.7	0.0	–3.8
E2+S+PC	2 314.0	172.0	–0.1	–70.7
E2+IM+PC	2 330.4	56.7	0.6	–90.3

Table 2. The APTC with TS constraints using acceleration methods for power transmission 2 estimation results.

CE	APTC, MW	T, s	ΔAPTC, %	ΔT, %
BC	9	276.6	–	–
E1	1 935.6	276.4	–0.9	–0.1
E2	1 940.2	208.5	–0.6	–24.6
E3	1 765.2	188.3	–10.6	–31.9
IM	1 911.0	145.9	–2.1	–47.3
PC	1 952.3	146.6	0.0	–47.0
S	1 952.3	259.6	0.0	–6.1
E2+S+PC	1 940.2	155.0	–0.6	–44.0
E2+IM+PC	1 919.5	94.6	–1.7	–65.8

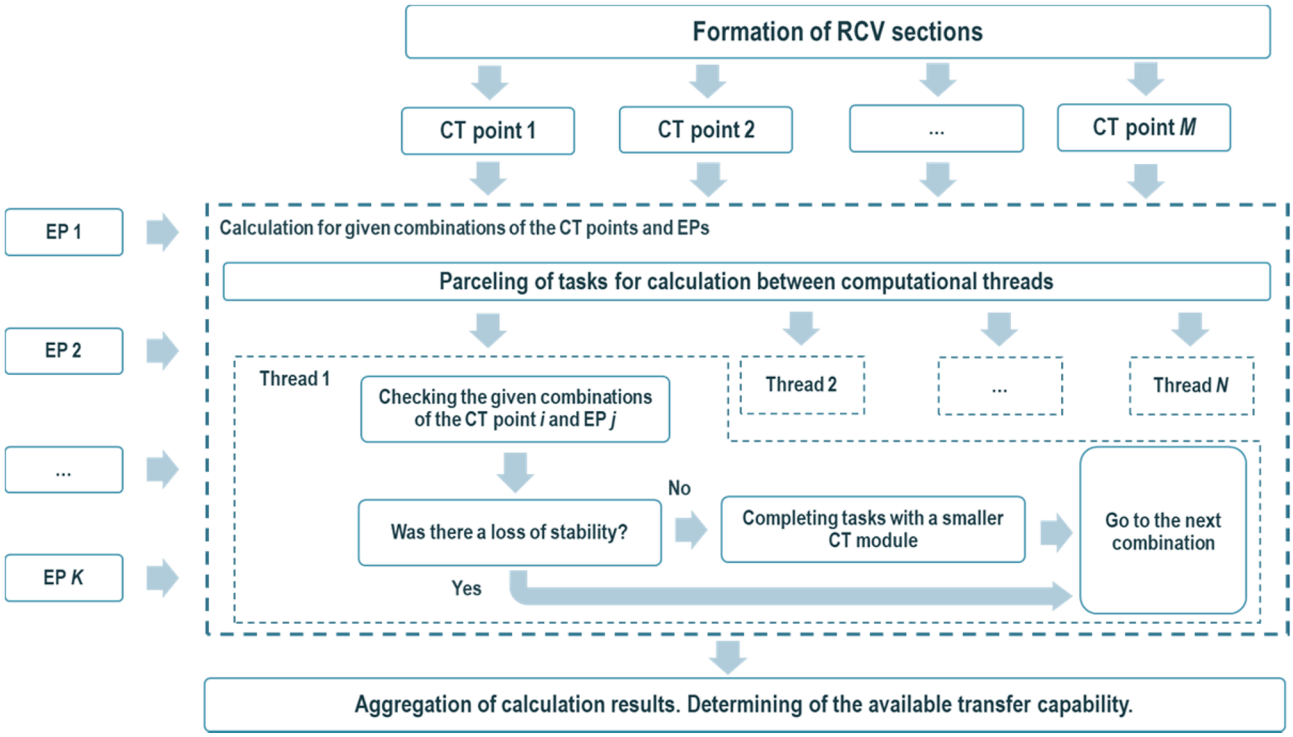

Fig. 5. The EMT parallel calculations algorithm for the APTC estimation with the transient stability constraints in the SMMS

Table 3. The APTC calculations with TS constraints using acceleration methods for power transmission 3 results.

CE	APTC, MW	T, s	ΔAPTC, %	ΔT, %
BC	2 017.2	427.9	–	–
E1	2 006.1	421.8	–0.6	–1.4
E2	2 012.1	333.6	–0.3	–22.1
E3	1 902.4	306.7	–6.0	–28.3
IM	2 017.2	134.3	0.0	–68.6
PC	2 017.2	187.8	0.0	–56.1
S	2 017.2	407.9	0.0	–4.7
E2+S+PC	2 012.1	141.5	–0.3	–66.9
E2+IM+PC	2 012.1	68.3	–0.3	–84.0

Analysis of the results in Tables 1, 2, and 3 leads to the following conclusions.

1. Eliminating buses with a rank of 2 or less gives the greatest computation time decrease effect. The APTC computation time fell by 22-24%, while the variance in the APTC result was less than 1%. There is no noticeable performance gain after the rank 1 bus reduction. The bus elimination for ranks 3 or lower saw the best computation time reduction (28–30%). Even though the APTC value discrepancy is 6-9%, that is unacceptable.

Fig. 6 shows the rotor angle transient response to the disturbance for the reduced and original models for the unstable case and the case which is close to the stability margin.

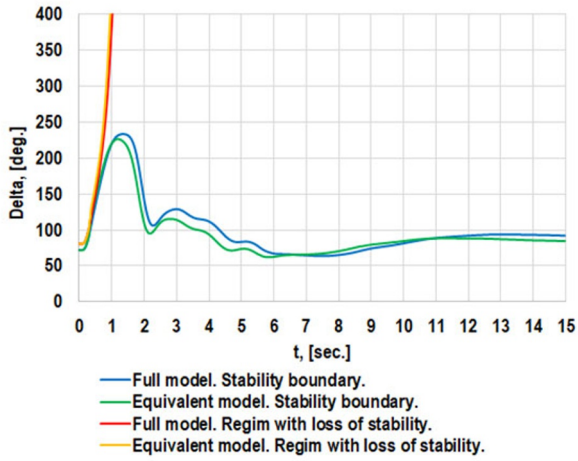

Fig. 6. Rotor angle transient response to the disturbance for the reduced and original models.

2. The use of the implicit integration method for solving the DAE in the TS simulation led to a significant time reduction that reached 45-75%, despite a significantly smaller minimum integration step. The best acceleration was achieved for the power interface with a large number of stable TS simulations. The difference in the APTC with TS constraints does not exceed 3% with the use of the implicit method.

The rotor angle transient response to the disturbance for explicit and implicit integration methods is shown in Fig. 7.

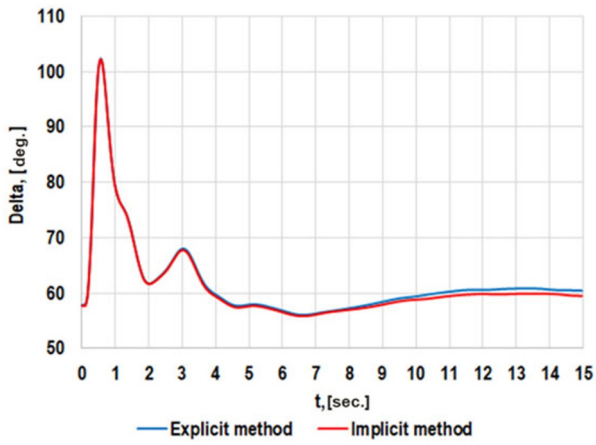

Fig. 7. Rotor angle transient response to the disturbance for explicit and implicit integration methods

3. Assuring the parallel TS simulations in accordance with the proposed approach resulted in a 45–60% reduction in calculation time. There were no differences in the APTC achieved. The time savings offered by parallel calculations became increasingly apparent as more emergency processes were examined during the APTC assessment.

4. Sequential TS initialization resulted in a 3-6% reduction in computation time with no changes in the APTC achieved. The performance improvement became more noticeable the more TS computations were carried out during the APTC with TS constraint estimation.

5. The use of a variety of acceleration techniques in combination leads to the highest efficiency for all the power interfaces taken into consideration.

7 Conclusion

This paper suggests several methods to enhance stability margin monitoring systems' analysis of available power transfer capacity with transient stability restrictions. Regarding the APTC estimation accuracy and the reduction in calculation time, these methods were compared when calculating the APTC for three different interfaces. It was shown that the best outcomes are obtained by combining the reduction of buses with rank 2 or below with the implicit integration method and parallel TS simulation. This combination enables a reduction in the APTC estimation time of up to three and, in some circumstances, even ten times.

For the stability margins monitoring system, the proposed approaches and their combinations could be used to accelerate calculation of the available power transfer capacity.

The focus of future research will be on refining the SMMS algorithm to achieve higher reductions in computation cycle duration. Additionally, the proposed approaches will be tested on an enhanced set of power system models.

References

1. Methodological guidelines on the stability of power systems (approved by the Order of the Ministry of Energy of Russia dated 03.08.2019 No. 630). Requirements for ensuring the reliability of electric power systems, reliability and safety of electric power facilities and power receiving installations. Moscow, 2018.
2. Mikhailenko A. F., Neuimin V. G., Satsuk E. I., Snegirev D. A. Comparison of the efficiency and accuracy of network equivalence algorithms for a sustainability inventory monitoring system. Izvestiya STC of Unified Power System. **No. 2(85).** pp. 5-16. 2021
3. Snegirev D. A., Neuimin V. G. Comparison of methods of equivalence of the computational model in determining permissible flows by the criterion of dynamic stability
4. Software package «Raiden». Available at: https://inorxl.com/raiden/
5. E. Mashalov, "Raiden. Power System Transient Stability Simulation Software Prototype," 2022 International Ural Conference on Electrical Power Engineering (UralCon), Magnitogorsk, Russian Federation, 2022, pp. 145-153, doi: 10.1109/UralCon54942.2022.9906601.
6. Software package «RUSTab». Available at: https://www.rastrwin.ru/rustab/
7. Almasi G. S., and Gottlieb A. Highly Parallel Computing, 2nd ed. Redwood City, CA: Benjamin/Cummings, 1994.