# Developing a three-phase converter to be used in a prototype of a virtual inertia system based on frequency and active power relationship

*Maxim* Burmeyster*, *Ilia* Berdyshev, *Ramis* Bulatov, and *Rinat* Nasyrov

Department of Electric Power Systems, National Research University "MPEI", Moscow, Russian Federation

**Abstract.** The integration of power plants based on renewable energy sources (RES) into existing energy systems causes a number of problems, one of which is the violation of the stability of the generators parallel operation. One of the possible methods for the above problem solving is the use of virtual inertia systems (VIS). In this paper, we review the process of a converter developing for further use in a VIS prototype. The developed device converts direct current from a laboratory power supply into a sinusoidal three-phase voltage of industrial frequency. The switching of the converter's power transistors is controlled through digital signal processor (DSP) TMS 320 F 28379 D via IR 2110 drivers. Using Altium Designer, a schematic diagram and layout of the printed circuit board of the converter were developed. Based on the manufactured printed circuit board, a converter was assembled, the correctness of its operation was checked, and a conclusion was made about the possibility of its use in the VIS prototype.

## 1 Introduction

Currently, renewable energy sources are widely used all over the world. The generation of electricity by wind power plants (WPP), solar power plants (SPP), etc. is actively introduced into electric power systems (EPS) and distribution networks. According to the report of the International Renewable Energy Agency, in the period from 2012 to 2022 the installed capacity of power plants based on RES more than doubled from 1443 to 3371 GW [1].

The RES integration into existing power systems causes a number of problems, among which one of the most important is the violation of the stability of the parallel operation of generators in the system. Most modern wind turbines operate with a variable speed of wind turbine rotation and are connected through semiconductor power converters, which does not provide inertial response. Photovoltaic cells and energy storage systems (ESS) are connected through inverter equipment and do not contribute to the overall inertia of the EPS either [2, 3]. The stability of the system directly depends on the reserve of kinetic energy in the generators. Hence, the sources connected through power converters do not increase the reserve of the system's kinetic energy, but at the same time, they act as sources of power. This leads to heavier transient processes in the EPS and a decrease in its stability during disturbances [4–7]. One innovative solution to the problems described above is the use of virtual inertia systems.

## 2 Virtual Inertia System Concept

A virtual inertia system can be characterized as a complex of devices and algorithms that converts direct current into alternating current of industrial frequency, simulating the inertial response of synchronous machines to disturbances in the EPS [8]. The main elements of the VIS are power converter equipment (converter), converter control system, and electric power storage system (Fig. 1).

The system is based on the virtual inertia algorithm. It allows sources of electricity connected to the network through converters acquire the properties of synchronous generators (SG). VIS determines the control signals for the converter transistors, so that energy generated by renewable energy sources has the characteristics of that produced by SGs – frequency maintenance, oscillation damping [9].

## 3 Development of the Functional Diagram of the Converter

The designed three-phase converter can be represented as four large functional blocks: a control system, a power section, current and voltage sensors, and a protection system. The developed functional diagram is shown in Fig. 2.

* Corresponding author: max.burmeyster@gmail.com

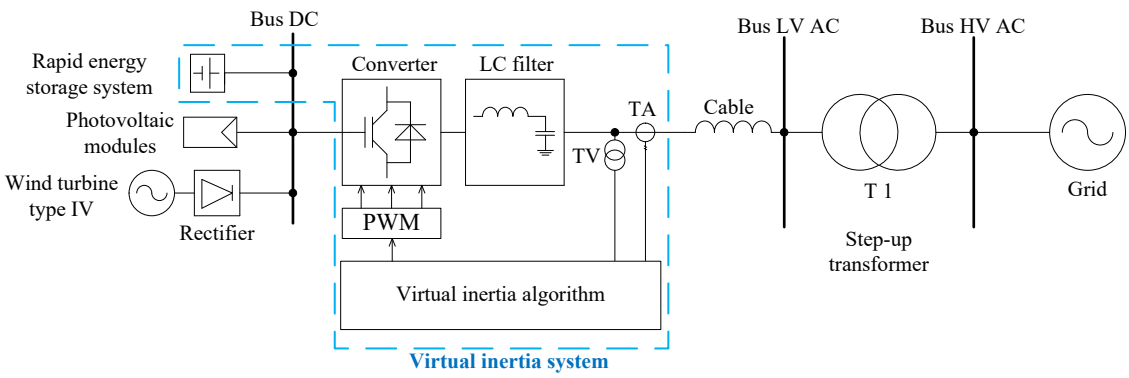


**Fig. 1.** An example of VIS use.

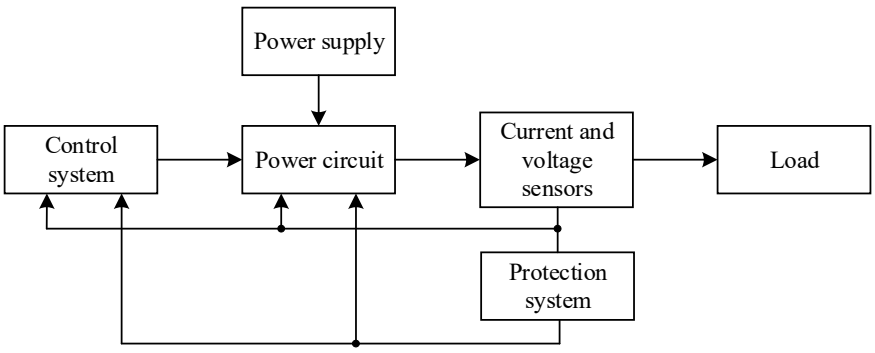


**Fig. 2.** Functional diagram of the developed converter.

The control system generates control signals for the power section of the converter (transistors) in accordance with the virtual inertia algorithm using a programmable DSP. The power section is a set of transistors connected in the form of a three-phase two-level inverter and their drivers. Current and voltage sensors measure the instantaneous values of current and voltage from the power supply and load side. After that, the measured values are transmitted to the protection and control systems to create feedback. The protection system is necessary to prevent emergencies on the converter, such as exceeding the permissible load or a short circuit. An alarm signal is sent to the control system and power section when an impermissible operating mode occurs. As a result, the control system blocks the PWM operation, and the transistor drivers turn off the power switches.

### 3.1 Developing control system

The control system was designed based on the LAUNCHXL-F28379D breadboard, with Texas Instruments DSP TMS320F28379D installed on it. TMS320F28379D is a powerful 32-bit floating-point microcontroller unit (MCU) designed to perform complex feedback control tasks in such areas as: industrial motor drives, solar inverters and digital energy, electric vehicles and transport, and signal processing.

To obtain sinusoidal voltage at the output of the converter, a method was chosen to control power transistors using pulse-width modulation (PWM). PWM signals are generated by the DSP using the developed software code.

### 3.2 Developing power section

Altium Designer software package was used to develop the functional diagram and the layout of the printed circuit board (Fig. 3). The elements were chosen, primarily, based on the technical limitations of the equipment available in the laboratory. The maximum current generated by laboratory power supplies and passing through the inverter is 10 A and the maximum voltage is 30 V.

MOSFETs were used in this design, which are the most widely used power devices due to their high switching speed, low gate drive power, and parallel connection capability. A MOSFET used in this work is an IRF 530 N with a drain current of 14 A at 25 °C, a drain-to-source voltage of 100 V (min.), a drain-to-source static resistance of 0.16 Ω (max.).

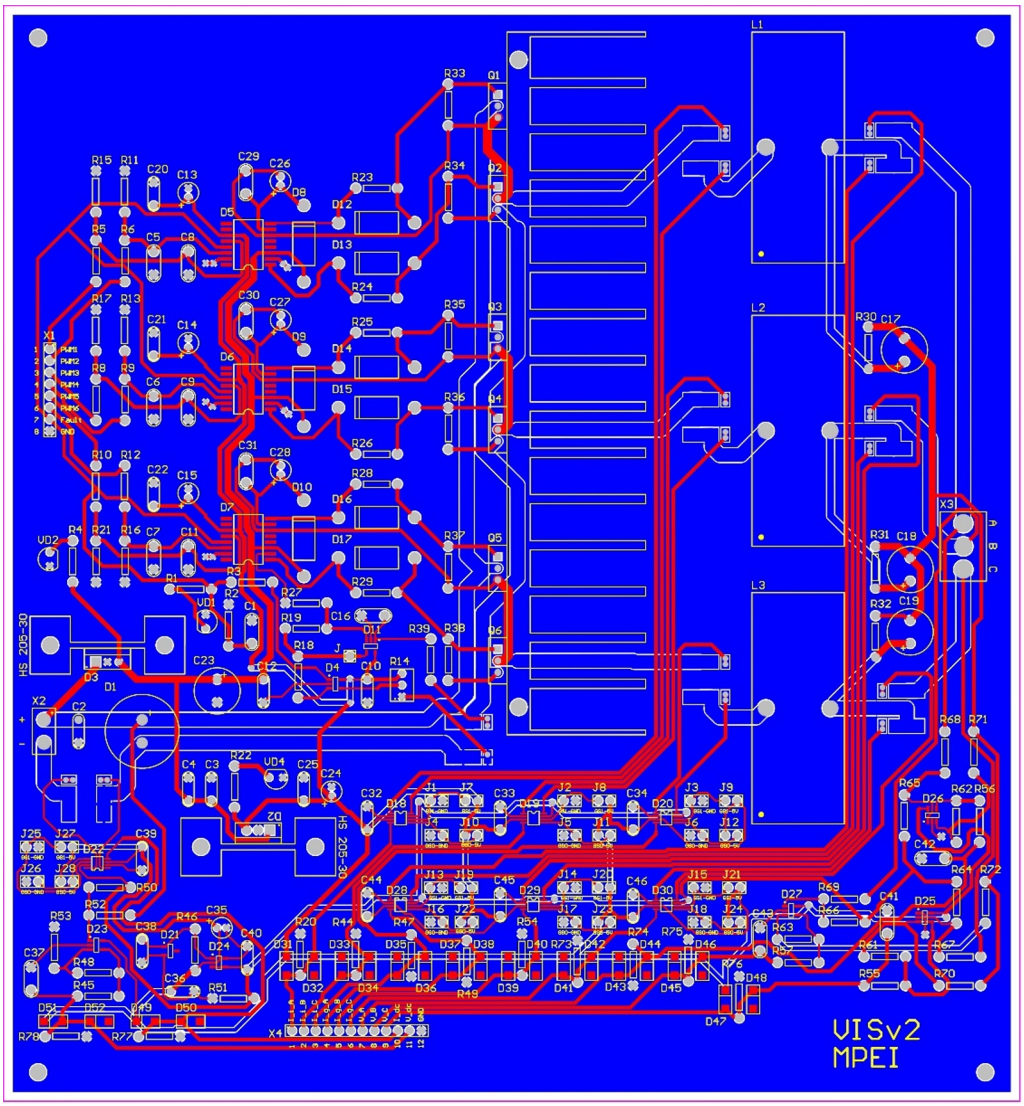


**Fig. 3.** PCB layout in Altium Designer.

The next step in the development of the converter was the coordination of key elements with the control system. To control the transistors, a voltage of 15 V and a pulsed current are required, which allows reducing switching losses. To turn on the upper transistor in the leg, it is necessary to apply voltage to its gate relative to its source, while the source potential changes in accordance with the voltage at the load. In other words, to unlock the upper transistor in the leg, the voltage at its gate must be Udc+15V, where Udc is the DC supply voltage. For this, half-bridge drivers IR 2110 are used, one for each phase (3 in total). This driver allows coordinating the 3.3 V control system and the power transistors of the converter, ensuring the correct functioning of the upper phase transistor, providing a delay between turning off the upper transistor and turning on the lower one.

### 3.3 Current and voltage sensors

To implement current and voltage feedback and protection operation, it is necessary to use appropriate sensors to measure the magnitude of currents and voltages at the converter output.

#### *3.3.1 Voltage Sensing*

The DC bus voltage and AC output voltages are measured differentially using resistor dividers and operational amplifiers, as shown in Figure 4. An offset voltage is added to the signal to allow measurement with an ADC that can only convert positive voltages.

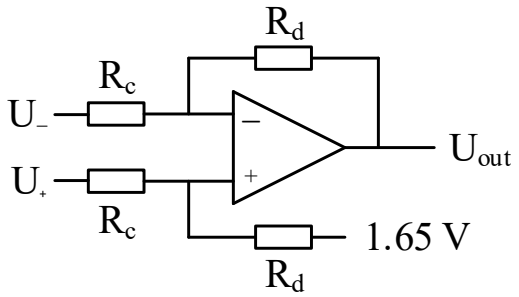


**Fig. 4.** Differential voltage meter.

The voltage at the output of the differential voltage meter is calculated by formula (1):

$$U_{out} = \frac{R_d}{R_c}(U_+ - U_-) + 1.65 \quad (1)$$

### *3.3.2 Current Sensing*

Critical to building a feedback-control system is the accurate measurement of the inverter current. There are three main ways to measure current in power circuits, which differ significantly in their characteristics: current shunt, current transformer, and Hall sensor. This project uses shunt current measurement. The method was chosen because it is the simplest, cheapest and fastest way to measure current. At high currents, more power is dissipated on the shunt, which leads to a decrease in efficiency and the need to cool down the shunt. The absence of galvanic isolation when using a shunt in this project is not critical, since the operating voltage of the inverter does not exceed 15 V, and relatively small currents flowing through the shunt will not create major power losses. In this project, current is measured in three places: before, after the filter inductor, and in the DC circuit.

### 3.4 Protection systems

A system of protection against exceeding the maximum allowable current was developed for the converter. Overcurrent protection or short circuit protection is the most common type of protection because this type of malfunction can lead to the complete destruction of an electronic device. The installation of protection is especially important when developing a converter prototype due to possible flaws and errors in the printed circuit board layout.

A shunt with a 0.01 Ω resistance is included in the gap between the "ground" and the transistor emitters as a current sensor. An operational amplifier is connected to the shunt to amplify small voltage (from tens of millivolts to volts). The resulting amplified signal is compared with the reference signal using a comparator. If the measured voltage is above a certain threshold value, then the signal at the output of the comparator changes from "0" to "1", which disables the PWM signal to the transistor drivers. The trip current is set by a trimmer, which forms a voltage divider at the inverting input of the comparator. The functional diagram of the converter protection system is shown in Fig. 5.

## 4 Results

The work resulted in the development and manufacturing of a converter printed circuit board, a control system based on DSP TMS320F28379D, and a current protection system. To test the operation of the converter, a full-scale experiment was carried out with the connection of a resistive load and simulation in the MATLAB/Simulink software package to verify the results obtained.

For a full-scale experiment, a test bench was assembled (Fig. 6). A KORAD 3005D laboratory DC power supply was used as a power source and a RIGOL DS1054Z oscilloscope was used to record oscillograms. The main parameters of the test bench are shown in Table 1.

**Table 1.** Main parameters of the test bench.

| Parameter | Value |
|---|---|
| DC supply voltage | 20 V |
| Linear AC voltage at the output of the converter | 12.25 V |
| Load resistance | 6.8 Ω |
| Filter coil inductance | 1.7 mH |
| Filter capacitor capacity | 470 μF |
| Transistor switching frequency | 10 kHz |
| AC frequency | 50 Hz |
| Three-phase load power | 24.852 W |

After programming the DSP, the PWM signal generated at its outputs was checked. The PWM is tuned to 10 kHz frequency, with 50 Hz modulated signal frequency (Fig. 7).

Fig. 8 shows the output voltage oscillograms of the converter. Based on the data analysis, it was concluded that the inverter worked correctly, the voltage shape was close to a sinusoid, the total coefficient of harmonic components of the voltage at the output of the converter was 1.37%, as required by state standard GOST 32144-2013.

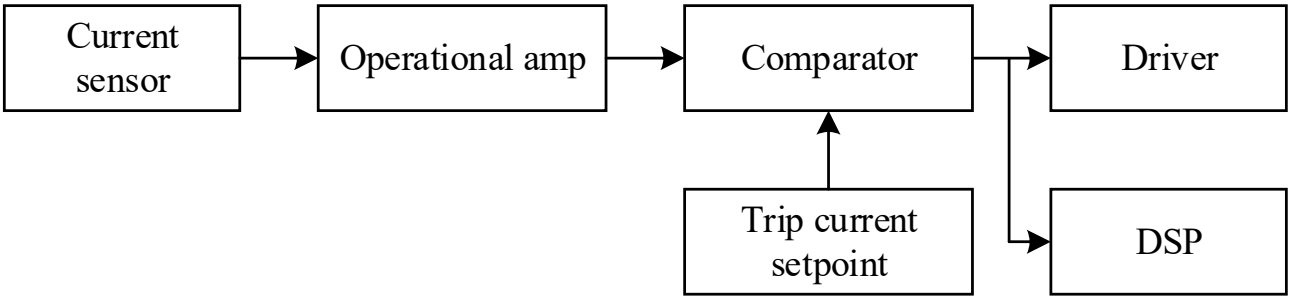


**Fig. 5.** Functional diagram of the converter protection system.

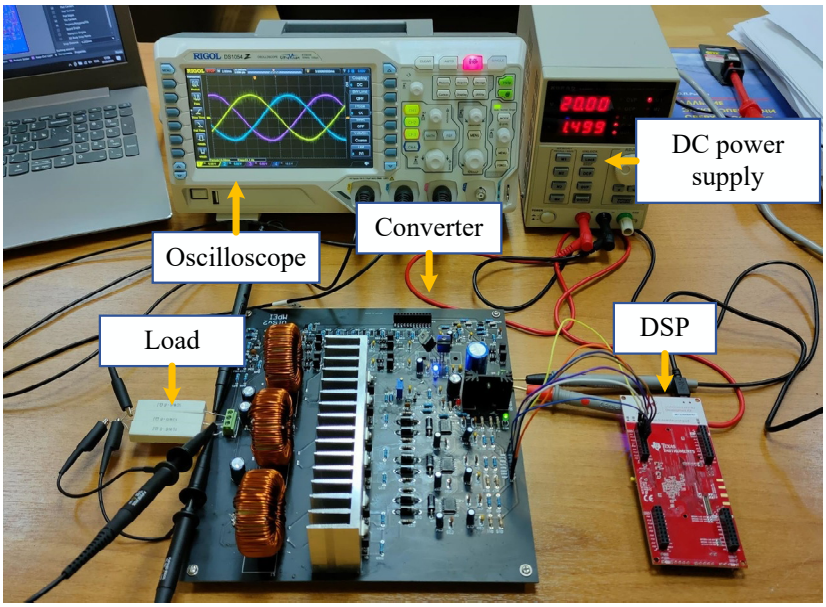


**Fig. 6.** Test bench for experiments.

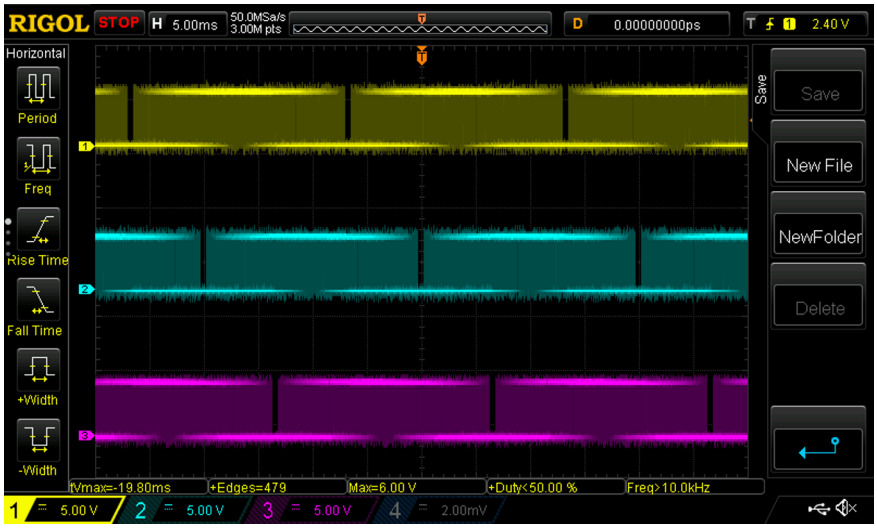


**Fig. 7.** PWM signal oscillograms of the upper keys of the developed phase converter A (yellow), B (blue), C (purple).

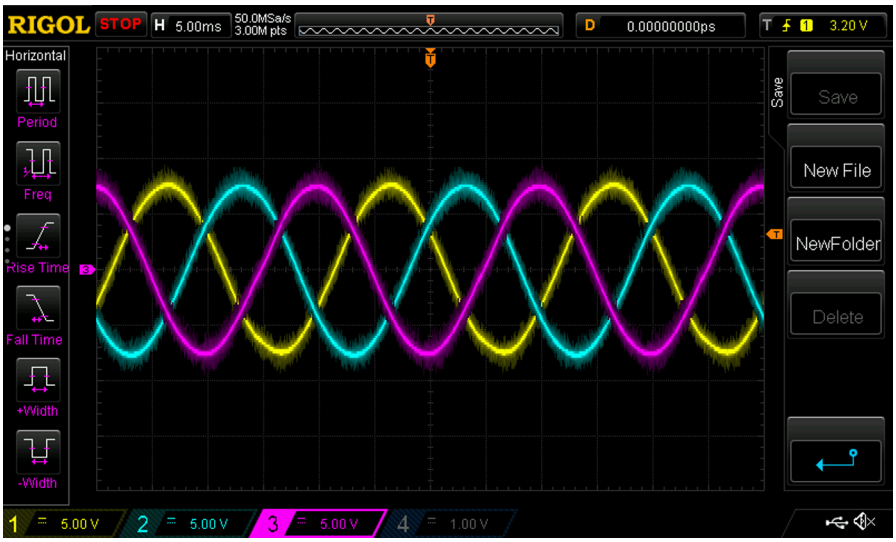


**Fig. 8.** Oscillograms of the output voltages of the developed phase converter A (yellow), B (blue), C (violet).

## 5 Conclusion

The work resulted in construction of a three-phase converter based on DSP TMS320F28379D, which was implemented using MOSFET power transistors. The converter generates 12 V three-phase sinusoidal linear voltage when powered by a 19.596 V power supply. For the DSP, the software code was written using the timers and interrupters built into the DSP, which allows for stable generation of control signals. In addition, as part of the work, a hardware current protection system was developed that disables drivers and the supply of control signals when the preset threshold is exceeded. To test the performance of the converter, an experiment was conducted with the connection of a 21.176 W resistive load. During the experiment, oscillograms of phase voltages at the output of the converter and control signals at the output of TMS 320F28379D were recorded.

The developed inverter is ready for use in the prototype of the virtual inertia system based on the frequency and active power connection. For this purpose, the converter is planned to be connected through a step-up transformer to an external network in the laboratory and finalize the software code of the virtual inertia algorithm for DSP.

The investigation has been carried out within the framework of the project "Development of a prototype virtual inertia system for use in solar and wind power plants as part of a microgrid" with the support of a subvention from the National Research University "MPEI" for implementation of the internal research program "Priority 2030: Future Technologies" in 2022-2024.

## References

1. *Renewable capacity statistics 2023*, International Renewable Energy Agency, Abu Dhabi.
2. B. Kroposki, B. Johnson, Y. Zhang, V. Gevorgian, P. Denholm, B.M. Hodge, B. Hannegan. *Achieving a 100% Renewable Grid: Operating Electric Power Systems with Extremely High Levels of Variable Renewable Energy.* IEEE Power Energy Mag. 2017, **15**, pp. 61–73.
3. F. Gonzalez-Longatt, E. Chikuni, E. Rashayi. *Effects of the Synthetic Inertia from wind power on the total system inertia after a frequency disturbance.* In Proceedings of the IEEE International Conference on Industrial Technology (ICIT), Cape Town, South Africa, 25–28 February 2013; pp. 826–832.
4. F. Dorfler, S. Bolognani, J.W. Simpson-Porco, S. Grammatico, *Distributed control and optimization for autonomous power grids,* in: 2019 18th European Control Conference, ECC 2019, 2019, pp. 2436-2453.
5. T. Ackermann, T. Prevost, V. Vittal, A.J. Roscoe, J. Matevosyan, N. Miller, *Paving the way: a future without inertia is closer than you think*, IEEE Power Energy Mag. **15** (6), 2017, pp. 61–69.
6. L. Zhang, H.P. Nee, L. Harnefors, *Analysis of stability limitations of a VSC-HVDC link using power-synchronization control,* IEEE Trans. Power Syst. 26 (3), 2011, pp. 1326-1337.
7. C. Li, I. Cvetkovic, R. Burgos, D. Boroyevich, C. Engineering, V. Tech, *Assessment of virtual synchronous machine-based control in grid-tied power converters,* in: 2018 Int. Power Electron. Conf. (IPEC-Niigata 2018 -ECCE Asia), 2018, pp. 790–794.
8. M.V. Burmeyster, R.V. Bulatov, K.A. Blinova. "*The use of virtual inertia systems to improve the quality of transients in electric power systems*". Fedorov Readings - 2021: LI international scientific and practical conference with elements of a scientific school, Moscow, November 17–19, 2021. - Moscow: MPEI Publishing House, 2021. - pp. 318–324 (In Russian).
9. H. Bevrani, T. Ise, Y. Miura. *Virtual synchronous generators: A survey and new perspectives.* Int. J. Electr. Power Energy Syst. 2014, **54**, pp. 244–254.