Analysis of studies of work processes of energy-saving hydraulic drives and devices of highly loaded technological machines and equipment

Petr Popikov[1], *Ivan* Derepasko[1], *Kostantin* Khomenko[1], *Dmitry* Rudoy[2,3], *Anastasiya* Olshevskaya[2], *Alexander* Rybak[2*], *Alexey* Pelipenko[2], *Svetlana* Teplyakova[2], and *Maxim* Romanov[2]

[1] Voronezh State Forestry Engineering University named after V.I. G.F. Morozova, st. Timiryazev, 8, 394087, Voronezh, Russia
[2] Don State Technical University, 1, Gagarin Sq., 344003, Rostov-on-Don, Russia
[3] Agricultural Research Centre "Donskoy", Lenin Str., 14, Zernograd, Rostov Region, 347740, Russia

Abstract: The analysis of studies of the work processes of energy-saving hydraulic drives and devices was carried out in order to identify effective ways to reduce the dynamic loading and energy intensity of highly loaded technological machines and equipment. When studying the working processes of an energy-saving pneumohydraulic fifth wheel coupling of a timber tractor with a trailer, it was found that the recuperated power was 5.1-5.9 kW, and the average acceleration of the semi-trailer was 0.8 ... 0.81 m/s^2. The energy-saving device of the Amkodor 208V front loader, which includes two torsion springs installed between the frame and the boom, reduces energy costs by 26%. The paper presents studies on energy saving during the operation of a hydraulic press with a pump-accumulator power supply. The results of studies of the energy-saving hydraulic drive of a forest manipulator and a chokerless skidding grip are presented. The energy-saving hydraulic drive of the manipulator column makes it possible to reduce the energy consumption of the column rotation by 25% and increase the productivity of the manipulator by 14%, and the chokerless grip hydraulic accumulator stores power in the range of 1.7 ... 2.1 kW. It is concluded that it is expedient to conduct further studies of the dynamics of energy-saving hydraulic drives of load-lifting mechanisms of manipulators of heavily loaded forestry vehicles.

1 Introduction

Currently, manipulator-type forest transport machines are widely used in logging in the forest complex. The priority direction in forest engineering is to increase the reliability and strength of manipulator-type forest machines. The main disadvantage of forest manipulators are large dynamic loads in transient modes and swinging of grips with logs, which greatly hinders the creation of new competitive manipulator equipment. One of the ways to reduce the dynamic load and energy intensity of the technological equipment of forest transport machines is the

* Corresponding author: 2130373@mail.ru

introduction of energy-saving hydraulic drives and devices that allow accumulating energy that is lost during operation, and then returns it back, i.e. energy recovery occurs. In addition, the energy-saving hydraulic drive helps to reduce the dynamic loading of metal structures of machinery and equipment. Considerable attention is paid to the issues of energy saving in technological processes both in our country and abroad. For the study of work processes, the method of mathematical modeling is widely used all over the world, which allows determining the dynamic characteristics of the designed technological process already at the design stage. equipment.

The purpose of the work is to identify ways to reduce the dynamic load and energy intensity of highly loaded technological machines and equipment based on the analysis of well-known studies of working processes of energy-saving hydraulic drives and energy recovery devices.

2 Materials and methods

To study the working processes of an energy-saving pneumohydraulic coupling device of a tractor for forest moving works with a trailer during the removal of long-length timber in various conditions of logging roads, the method of mathematical modeling was used [1]. The design scheme of the pneumohydraulic coupling device is shown in the Figure (Figure 1).

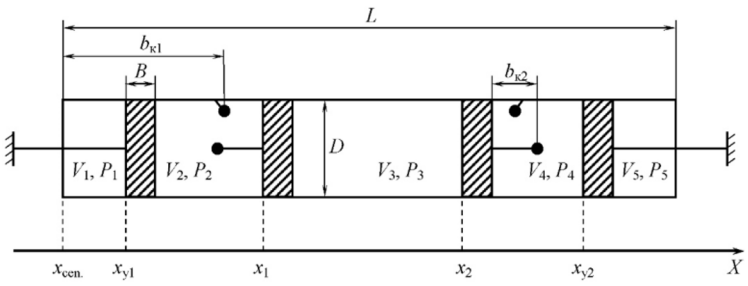

Fig. 1. The design scheme of the pneumohydraulic coupling device.

According to the design scheme, five disconnected cavities are identified in the proposed device. The coordinates in space are determined by the values x1, x1, x2, x2. Each cavity is connected to a pneumohydraulic accumulator. To solve the mathematical model, programs were created for modeling the kinematics of a forest machine of a logging truck train and modeling the operation of an energy-saving device. The dependences of the recovered power and longitudinal acceleration of a semi-trailer with timber on the diameter of the hydraulic cylinder of the recovery coupling device are obtained. (Figure 2).

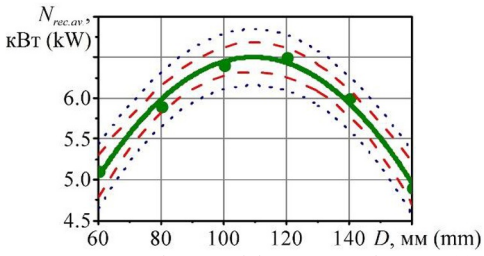

Fig. 2 a. Dependences of the recovered power (a) on the diameter of the hydraulic cylinder of the coupling device recovery.

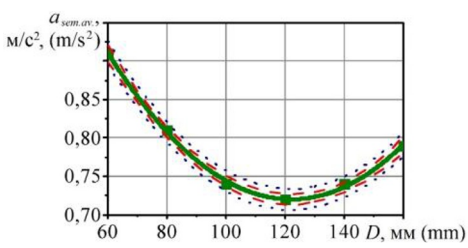

Fig. 2 b. The dependence of the longitudinal acceleration of a semi-trailer with timber (b) on the diameter of the hydraulic cylinder of the recovery coupling device.

It was found that the recovered power was 5.1–5.9 kW (Figure 2 a), the average acceleration of the semi-trailer was 0.8... 0.81 m/s2 (Figure 2, b).

In the work of the same authors [2], as a result of computer modeling, it was found that the optimal diameter of the hydraulic cylinder of the coupling device recovery was 100 ... 120 mm, the power value that can be recovered is in the range of 6.4 ... 6.5 kW, the minimum acceleration value of the semi-trailer relative to the tractor was 0.72 ... 0.73 m/s2.

In [3], a device for accumulating braking energy of the KAMAZ 5320 car was proposed, which made it possible to increase the fuel efficiency of the engine by (2-3%), reduce the wear of the braking system.

The article [4] developed a method for selecting a hydraulic accumulator from the model range, according to which the maximum pressure of the hydraulic drive is first determined, which depends on the torque on the shaft of the hydraulic motor, then the minimum pressure is determined from the absence of cavitation in the pump and hydraulic drive elements, the pre-charging pressure of the accumulator, the required useful volume of working fluid and the maximum volume of gas in the battery. Calculations are given for city buses, the operating mode of which is characterized by frequent stops and braking, taking into account the use of energy storage devices with a hydraulic accumulator. The total braking and stopping time will determine the charging time of the accumulator and its useful volume.

During operation of the forest hydraulic manipulator due to high dynamic loading at low air temperatures, failures of high-pressure hoses are 29.7–56%, and hydraulic cylinders are 14.0–24.1% [5]. A new method for diagnosing hydraulic cylinders is proposed, taking into account the limit value of the logarithmic decrement of the damping of the working fluid vibrations, which decreases with the wear of the seals to a value of $\delta = 0.533$, at which the repair of the hydraulic cylinder is necessary.

A number of works by foreign authors have been devoted to research on improving the energy efficiency of heavy-duty tractors with semi-trailers equipped with saddle-coupling devices [6-10]. Studies of the kinematics of the movement of a tractor with a semi-trailer, the influence of the indicators of aerodynamic qualities of a road train on reducing fuel consumption when transporting cargo over long distances, the reasons for the failure of the parts of the coupling device, as well as ways to improve the controllability of road trains during braking with the failure of the entire braking system are established.

To reduce energy consumption during the operation of the power plant of the oil-producing complex [11], a design of a hybrid electrohydrocylinder of regenerative action was created. The forward movement of the piston of the hydraulic cylinder under the influence of gravity of the working equipment of the rocking machine, due to the helical transmission, turns into the rotational movement of the rotor of the electric generator built into the sleeve of the hydraulic cylinder. Based on mathematical modeling, the amplitude-phase characteristics of the working fluid pressure for a standard hydraulic cylinder, curve- 1 and electrohydrocylinder, curve -2 (Figure 3) are obtained.

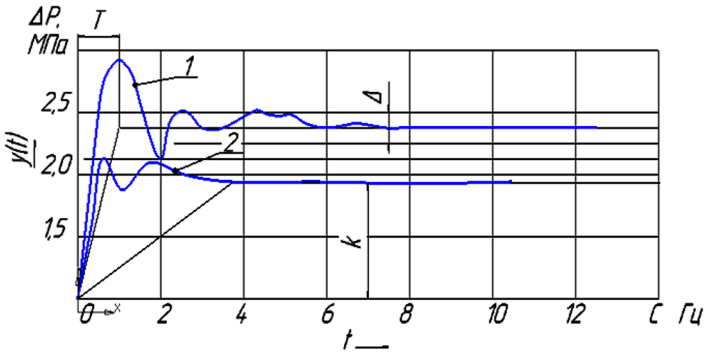

Fig. 3. Transients of working fluid pressure in hydraulic drive of working equipment.

Analysis of transient graphs shows that when using a standard hydraulic cylinder, the transient process lasts about 6 seconds, and when using an electrohydrocylinder with energy recovery about 3 seconds, while the efficiency of the power drive increases by 23%.

In the works of foreign authors [12,13], studies of the use of an electrohydrostatic drive on hydraulic manipulators of high load capacity have been carried out. The proposed electrohydrostatic drive meets the requirements of load retention, overload protection and differential flow compensation. An electrohydrostatic drive is compared with a traditional valve-controlled drive, an increase in the efficiency of the new drive and the possibility of energy recovery is established.

To recover the potential energy of the Amkodor208B single-bucket front loader, an energy-saving device is proposed, including two torsion springs installed between the frame and the boom [14;15]. The choice of springs is made from the condition that the torsion springs balance the gravity of the loading equipment without a load in the bucket in the lower position of the boom. As a result of the study of the working process of the loader, the energy characteristic of the system (Figure 4) is constructed. The dependence of the moment of lifting the load on the angle of lifting the boom MPG = f (φ), is depicted as a curve 2-3-4. The dependence of the torque on the torsion springs on the boom lifting angle MPR = f (φ) is a straight line 6-7. The area between points 1-2-3-4-5 is equal to the operation of boom hydraulic cylinders when lifting loading equipment. The area, 1-6-7-5 is equal to the useful work of the torsion springs. The proposed energy-saving device allows you to reduce energy consumption by 26%.

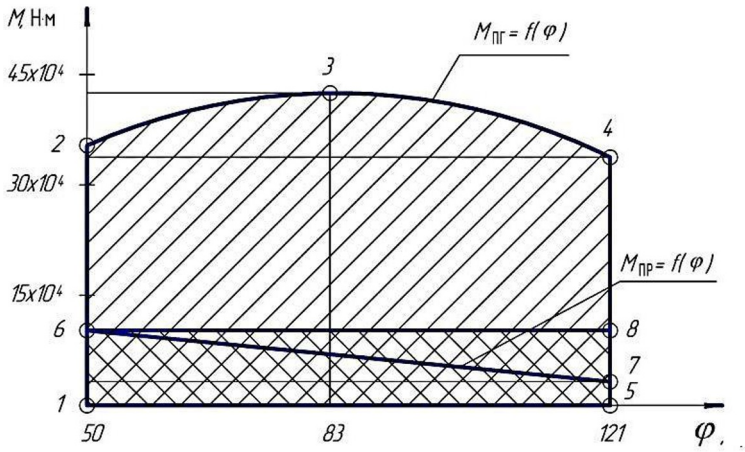

Fig. 4. Energy characteristics of the energy-saving loader system Amkodor208V.

In [16], research was conducted on energy savings during the operation of a hydraulic press with a pump-battery power source. The method of mathematical modeling based on the theory of volumetric rigidity of hydraulic systems is used. A program for calculating a mathematical model of a three-speed reciprocating drive of a hydraulic drive press based on a block of solutions of differential equations in the SimInTech environment has been developed. Graphs of the displacement and velocity of the hydraulic cylinder piston (Figure 5) are given, from which it can be seen that when the piston moves, it starts after 1.4 from the moment the pump is turned on. At this moment, the piston speed reaches 0.9 m/s, and then reaches the level of the average value of 0.4 m/s.

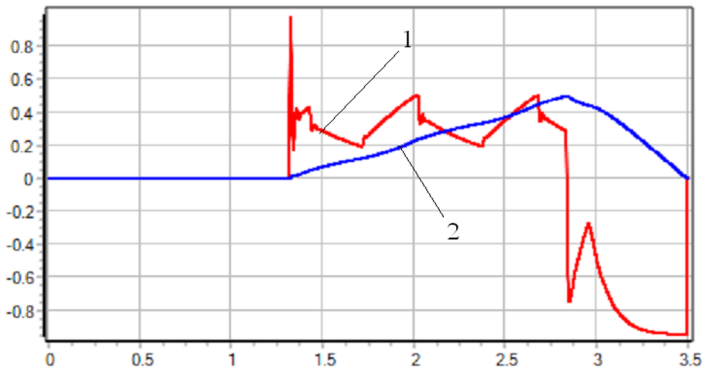

Fig. 5. The change in time of the parameters of the movement of the piston of the hydraulic cylinder: 1 – the speed of movement; 2 – displacement.

Pressure graphs at various points of the hydraulic system of the press are shown in Figure 6.

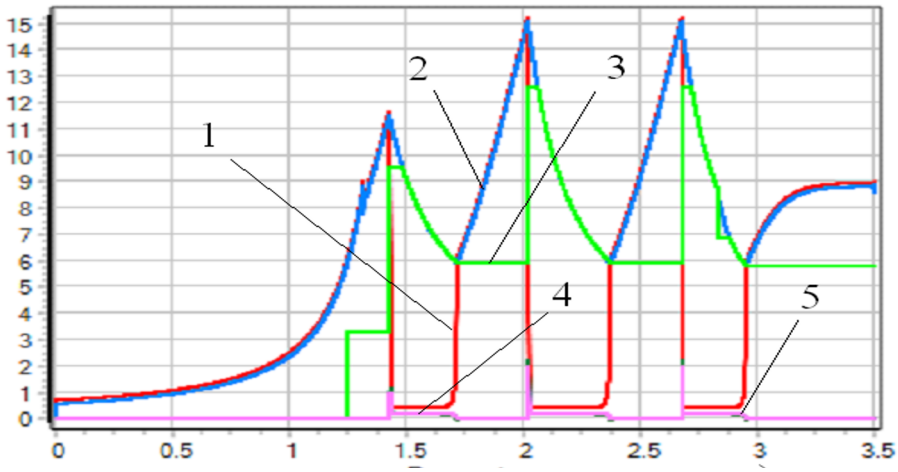

Fig. 6. Pressure changes in time at various points of the hydraulic system: 1 – the output of the hydraulic pump; 2 – the inlet to the accumulator; 3 – the working chamber of the unloading machine; 4 – the discharge chamber of the unloading machine; 5 – the drainage chamber of the gate of the unloading valve of the unloading machine.

When the hydraulic pump is switched on, the pressure of the working fluid at the outlet of the hydraulic pump (curve 1) and at the inlet of the accumulator (curve 2) increases to a

value of 15 MPa during 0.2 seconds as the accumulator is charged. When connected to the hydraulic system of the pump unloading machine, it allows you to increase the efficiency of the power supply system up to 27%.

A stand has been developed for resource testing of plunger hydraulic cylinders with energy recovery, in which one hydraulic cylinder performs the function of a hydraulic motor and acts on the second hydraulic cylinder, which performs the function of a hydraulic pump, through a transfer link in the form of a rocker arm. [17]. The influence of various design and functional parameters of the stand on the efficiency coefficient (Figure 7) has been studied.

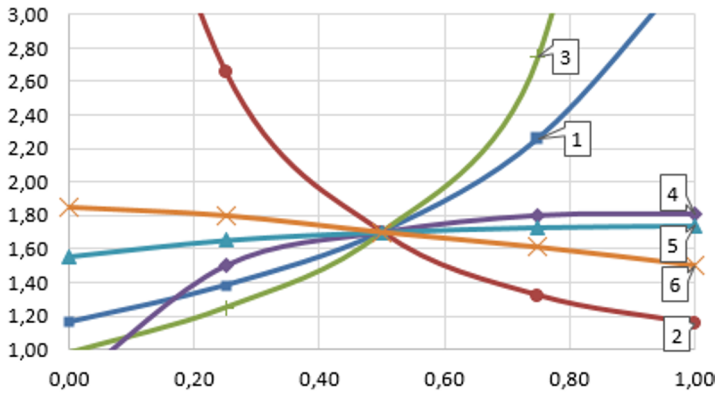

Fig. 7. Dependence of the efficiency coefficient kef on the design parameters

From the figure (Figure 7) it follows that the value of the efficiency coefficient depends more on the working volume of the hydraulic motor (curve 1), the working volume of the hydraulic pump (curve 2) and the gear ratio of the transmission from the shaft of the hydraulic motor to the shaft of the hydraulic pump (curve 3). Other parameters: gear ratio of the mechanism (curve 4); pressure setting of the loading valve (curve 5); angular speed of rotation of the shaft (curve 6) affect to a small extent. Therefore, when designing the hydromechanical system of the stand, the values of the working volume of the hydraulic motor and the gear ratio of the mechanism should be taken into account.

We have developed and manufactured a laboratory stand with an energy-saving hydraulic drive of the boom lifting mechanism of the manipulator (Figure 8) [18]. The modeling of the hydraulic system of the stand was carried out in accordance with a mathematical model, including the equation of boom motion and the equation of fluid flow taking into account the accumulator. Laboratory tests of the boom lifting mechanism with various loads were carried out using strain gauges D1 and D2 of the PD-100 type and a strain gauge laboratory. ZETLAB ZET 058. The results of laboratory studies of an energy-saving hydraulic drive, including a hydraulic recovery cylinder ГЦ2 and a hydraulic accumulator GA, confirmed the adequacy of the mathematical model.

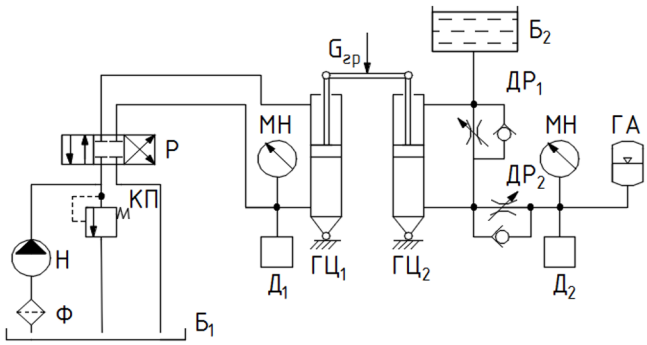

Fig. 8. Hydrokinematic diagram of the laboratory stand of the manipulator with energy recovery.

It is established that the energy-saving hydraulic drive of the laboratory stand of the manipulator stores about 70% of the energy of lowering the load.

The article [19] proposes a mechanism for turning the manipulator column with an energy-saving hydraulic drive, which accumulates energy when the column is decelerated and gives it away at the time of start-up and acceleration. A mathematical model of the working process has been compiled, in which the hydraulic system of the manipulator is presented in the form of separate cavities. (Figure. 9). The mathematical model includes differential equations of the rotational motion of the column, the flow rate of the working fluid and the working process of the accumulator. During computer and laboratory experiments, it was found that the energy-saving hydraulic drive of the manipulator column allows reducing the energy intensity of the column rotation by 25% and increasing the manipulator performance by 14% by reducing the amplitude of the load rocking.

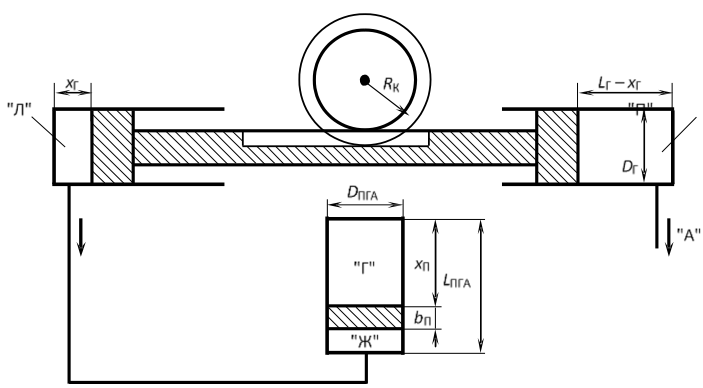

Fig. 9. Design scheme of energy-saving hydraulic drive of the manipulator column rotation mechanism

An energy-saving hydraulic drive has been developed in an aggregate with a wheeled agricultural tractor to ensure the recovery of the oscillation energy of a trilled bundle of wood by a lockless skidding gripper [20]. The stored energy of the accumulator in the range of 1.7 ... 2.1 kW is used to preload a bundle of timber with the jaws of the gripper, which eliminates the loss of individual sortings during the skidding process. The results of the study of the working process of the skidding gripper with an energy-saving hydraulic drive can be used in the design of gripping devices of manipulators of timber transport machines to assess the

energy consumption of the modes of pulling the sortings during loading and unloading operations.

4 Conclusions

Based on the analysis of the conducted studies of the working processes of energy-saving hydraulic drives and devices of technological machines and equipment, it was found that the lifting mechanisms of hydraulic manipulators of forest transport machines are the most highly loaded, however, studies to reduce dynamic loading and energy intensity have been conducted, in our opinion, insufficient. Therefore, it can be concluded that in order to achieve this goal, it is necessary to solve the following tasks:

1. To develop a new scheme of energy-saving hydraulic drive of the boom lifting mechanism of the manipulator of the forest transport machine;
2. To develop a mathematical model of loading and unloading operations of a manipulator boom with an energy-saving hydraulic drive;
3. To identify the patterns of operation of the energy-saving device of the lifting mechanism of the forest manipulator;
4. To justify the parameters of the energy-saving hydraulic drive of the manipulator to achieve minimum energy costs;
5. To determine the expected economic effect from the use of energy-saving damping devices on hydraulic manipulators.

5 Acknowledgements

The study was supported by a grant within the framework of the “Nauka-2030”.

References

1. Posmetyev V.I., Nikonov V.O., Manukovsky A.Yu., Posmetyev V.V., Izv. vuzov. Lesn. zhurn.. **5.** 85-99 (2022)
2. Posmetyev V. I., Zelikov V. A., Nikonov V. O., Posmetyev V. V., Chuikov A. S., Avdyukhin A.V., Forestry Journal 12**. 4 (48).** 114-129 (2022)
3. Polivaev O.I., Yanin A.N., Krivtsov V.A., Vikulin S.V. *Improving the operational properties of the Kamaz 5320 car by accumulating braking energy.* // Energy efficiency and energy saving in modern production and society. Materials of the international scientific and practical conference. Volume Part II. Voronezh Publishing House: Voronezh State Agrarian University named after Emperor Peter I (Voronezh), pp. 368-372 (2021)
4. Vorozhtsov O.V. Hydraulic drive of vehicle energy recovery. In the collection: Mathematical modeling of systems and processes. Materials of the international scientific and practical conference. Pskov State University. Pskov, pp. 57-62. (2022)
5. Piskunov M. Croatian Journal of Forest Engineering: Journal for Theory and Application of Forestry Engineering. **42**. 3. 391-403. (2021) Https://doi.org/10.5552/crojfe.863 .
6. Guang Xia, Mingzhuo Zhao, Xiwen Tang, Shaojie Wang, Linfeng Zhao, Control Engineering Practice **104** 104625 (2020). DOI: 10.1016/j.conengprac..104625.
7. Anil K. Madhusudhanan, Daniel Ainalis, Xiaoxiang Na (et al.) Transportation Research Part D**92.** 102717 (2021). DOI: 10.1016/j.trd.2021.102717.
8. Qing Zhang, Shuo Wei, Youming Chen 2020 Engineering Failure Analysis **109** (2020) 104352. DOI: 10.1016/j.engfailanal.2019.104352.

9. Zhileykin M., Skotnikov G. 2020 IOP Conf. Series : Materials Science and Engineering **820** (2020): 012017. DOI 10.1088/1757-899X/820/1/012017.
10. Zdravko Pandur, Hrvoje Nevečerel, Marijan Šušnjar, Marin Bačić, Kruno Lepoglavec 2021 Forestist, pp. 9-10. (31 titles). DOI 10.5152/ for-estist.2021.21012.
11. Savinkin V.V. 2021 Proceedings of Tomsk Polytechnic University.Georesources Engineering. **332**. 2. 229-244.
12. Jensen K. J., .Ebbesen M. K.,. Hansen M. R. 2021 Energies **14**. 20. 6566. Https://doi.org/10.3390/en14206566.
13. Jensen K. J., Ebbesen M. K., Hansen M. R., 2021, Mechatronics. **77**. 102599. Https://doi.org/10.1016/j.mechatronics.2021.102599 .
14. Smirnov A.N., Avramenko P.V. 2020 Recommendations for improving the energy efficiency of single–bucket front loaders during operation / Minsk, BGATU, - 76 p.
15. Smirnov A.N., Avramenko P.V., 2021, Scientific and technical fundamentals of front-end loader design: monograph. – Minsk BGATU – 172 p .
16. Vyalov S.A., Rybak A,T.,Tsybri I.K., Pelipenko A.Yu. 2021 Journal "Assembly in mechanical engineering, instrumentation" **9**, 397-401.
17. Pelipenko A., Rybak, A., Sarkisian, D., Saakian, S., Zhyravlyova, 2022, Modeling and CalculationLecture Notes in Networks and Systems **246**, 198-206.
18. Popikov P.I., Konyukhov A.V. 2022 Test bench for lifting mechanisms of forest manipulators with energy recovery. In the collection: Energy efficiency and energy conservation in modern production and society. Materials of the international scientific and practical conference. Voronezh, pp. 105-110.
19. Popikov P.I., Khomenko K.G. 2022 Improvement of rotation mechanisms of support-rotary devices of manipulator-type forest machines/ In the scientific and electronic journal "Innovations. The science. Education." number 71, pp. 47-58.
20. Chetverikova I.V.,.Zimarin S.V., Burdykin A.V. 2021 On the issue of improving the hydraulic drive of the lockless skidding grip // In the collection: Improving the efficiency of the forest complex. Materials of the seventh All-Russian National Scientific and Practical Conference with international participation. Petrozavodsk, pp. 197-199.