Development of a simulation model for controlling energy storage systems on electric trains

Stanislav Istomin*, and *Andrej Shatohin*

Omsk State Transport University, Marks ave. 35, Omsk, 644046, Russia

Abstract. The article discusses the experience of using electrical energy storage devices on multiple unit rolling stock, both in Russia and abroad. It is noted that the use of energy storage systems in railway transport in Russia lags somewhat behind its foreign colleagues. The main assumptions taken when performing simulation modeling of the operation of energy storage systems on an electric train are presented. Simulations of the operation of energy storage systems were carried out using the MatLab software package. Simulation models of an electric train with an energy storage device, a model of a heater for heating an electric train car, a model of a hybrid energy storage system, a model of a supercapacitor unit, and batteries are presented. The algorithm of operation of the active topology of a hybrid drive is considered. The developed simulation models have been tested. Graphs of the voltage at the pantograph and the current consumed by the electric train were obtained, as well as graphs of the operation of the battery and supercapacitor in charge/discharge modes.

1 Introduction

Carbon neutrality and autonomy of rolling stock in non-electrified sections are modern global trends in the field of railway transport [1-3]. Various manufacturers of multi-unit rolling stock are engaged in secret competition to see whose electric train has a greater autonomous range and is more energy efficient.

For example, Siemens has developed the Desiro ML ÖBB Cityjet eco electric train for Austrian railways with lithium titanate batteries with a total energy capacity of 528 kWh. Based on the Desiro ML ÖBB Cityjet eco, Siemens has developed the Mireo Plus B with a battery range of up to 120 km. Bombardier Transportation has developed an alternative to diesel trains, the Talent 3 electric train, capable of covering 100 km of non-electrified section. The Spanish rolling stock manufacturer Construcciones y Auxiliar de Ferrocarriles (CAF) has developed a whole series of electric trains for various operating conditions, which includes the Civity BEMU electric train with batteries. Alstom will supply smart and energy-efficient electric trains of the X'trapolis series for Melbourne. For British operators TransPennine and Great Western Railway, Hitachi supplied the Nova 1 series and GWR 802 series electric trains, respectively, with batteries. Stadler has developed the FLIRT Akku

* Corresponding author: istomin_sg@mail.ru

series electric train with a range of up to 150 km. Vivarail has developed a system for fast charging batteries for three-car trains of the 230 series (D78), which allows them to cover 60 km of non-electrified section after charging. In 2021, the Dutch carrier Arriva Nederland began operating an electric train of the Stadler WINK series with batteries with a capacity of 180 kWh. Alstom supplied 8 electric trains with energy storage devices of the Régiolis series. Stadler has developed an IPEMU train for the UK Underground, the charging time of which is less than 15 minutes, the battery is designed for more than 10,000 recharging cycles. Hitachi Rail has unveiled the Blues, a hybrid commuter train developed jointly with Italian passenger operator Trenitalia. The first Blues trains will arrive in the Tuscany region at the end of 2022.

The Russian Railways company tries to keep up with the world community and has in its arsenal such a development as the TEM5X hybrid diesel locomotive equipped with lithium-ion batteries from Rusnano, as well as various proposals from the country's scientific teams for the implementation of energy storage systems [4].

2 Materials and methods

The use of regenerative braking by multiple-unit rolling stock, the use of recovered energy for traction, own needs, or transmission through the contact network to neighboring trains requires attention to the interaction of the traction power supply system (STE) and the MVPS when developing a simulation model.

It was decided to take the following option as the basis for the STE simulation model [5, 6].

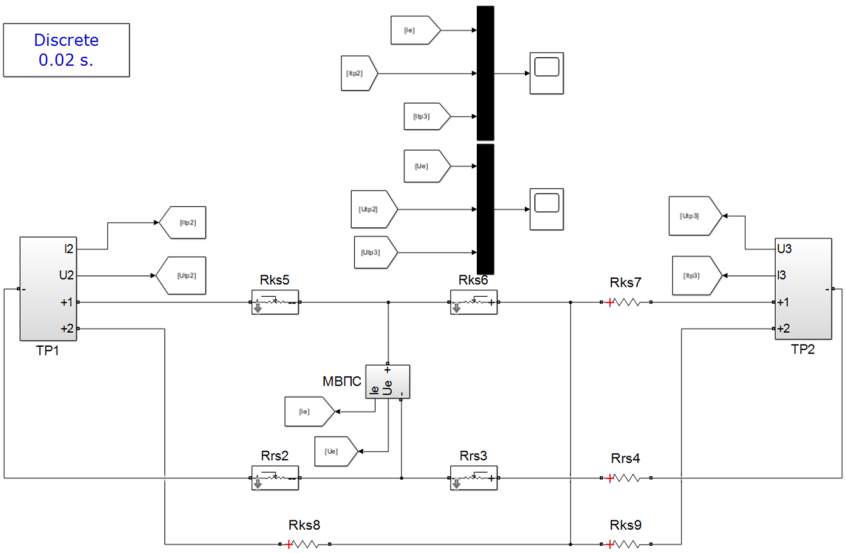

Fig. 1. Simulation model of power supply system.

The main assumptions for modeling are:

1) the external power supply voltage system is symmetrical and sinusoidal;
2) the open circuit voltage on the TP 3.3 kV buses is 3600 V;
3) the parameters of step-down and conversion transformers, as well as rectifier converters on TP are identical;
4) the external power supply system has infinite power;
5) PS sectioning post is located in the middle of the intersubstation zone;

6) the speed of multiple unit rolling stock when moving along the section of the intersubstation zone is assumed to be constant;
7) the current of the electric train changes in accordance with the data obtained during measurements on the change in the MVPS current;
8) during modeling, one electric train consisting of 5 cars (two head cars, two motor cars, one trailed car) will travel through the intersubstation zone.

A general view of the simulation model of the power supply system is presented in Figure 1. The model will allow you to obtain graphs of current and voltage along the feeders of the contact network at the time the electric train passes through the intersubstation zone.

The simulation is carried out with a time discretization of 0.01 s.

The simulation model of an electric train consists of two head cars, two motor cars and one trailer car (Figure 2).

A distinctive feature of motor cars is a controlled current source, with the help of which the operating modes of the electric train are set (traction, coasting, braking). The cars are heated using air heaters. Heat exchange in an electric train car generally depends on the temperature inside the car (t_{vag}), heat inflow from heaters (Q_{heater}), heat losses (Q_{los}) transferred from the car to the environment with temperature (t_{ave}), as well as on the thermal conductivity of the *R* car. Then the losses heat will be:

$$\frac{dQ_{los}}{dt} = \frac{(t_{vag} - t_{ave})}{R}$$

When the electric train operates in the “warm-up” and “heating” modes, depending on the cabin temperature, either all three sections of the heater (24 kW) or combinations of them (one -8 kW, two-16 kW) are turned on, in the "mode" ventilation" heater is turned off. The heat transfer diagram is shown in Figure 3.

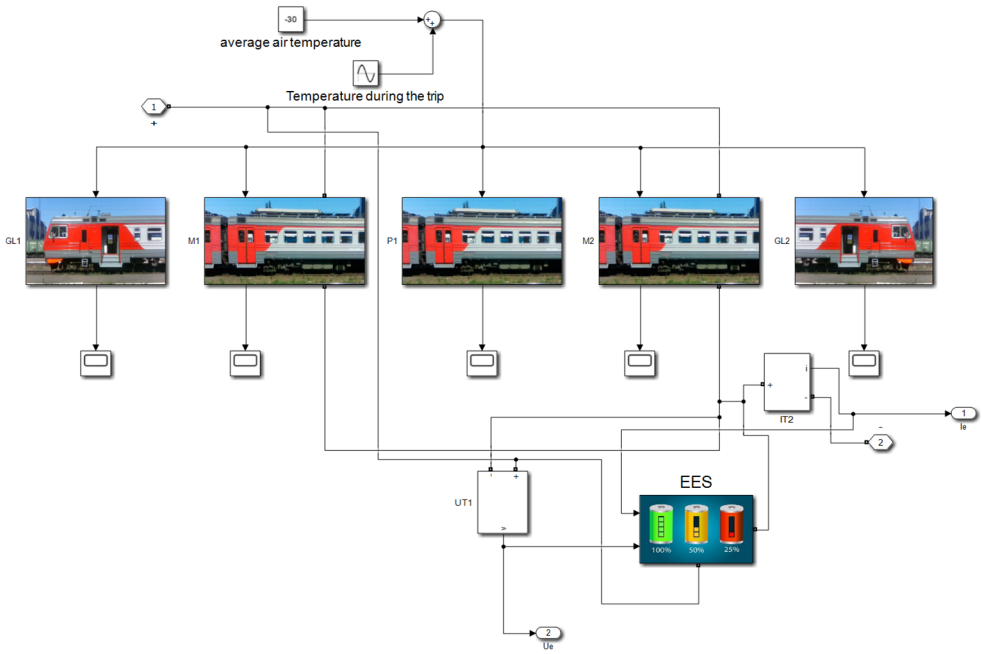

Fig. 2. Simulation model of an electric train with energy storage.

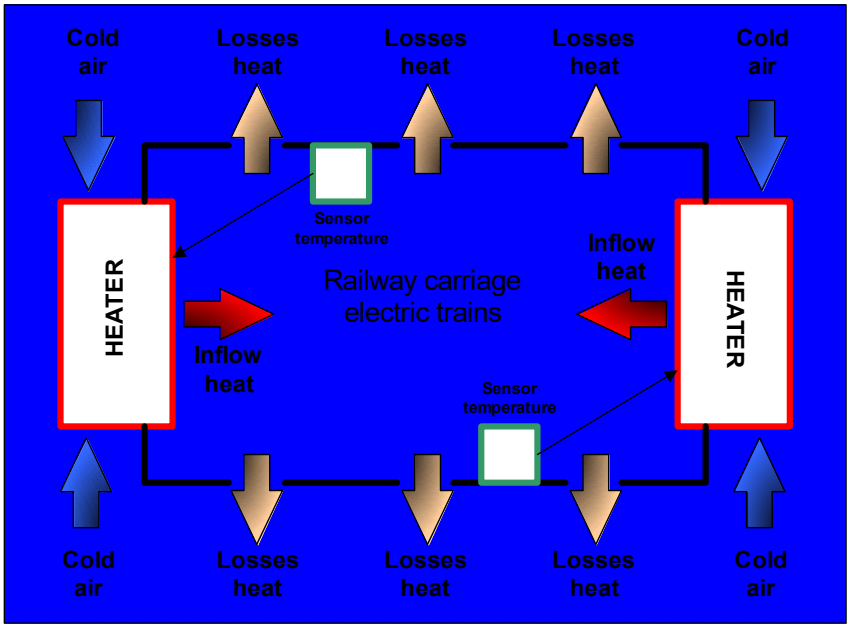

Fig. 3. Heat exchange in an electric train car.

A simulation model of the air heater is presented in Figure 4.

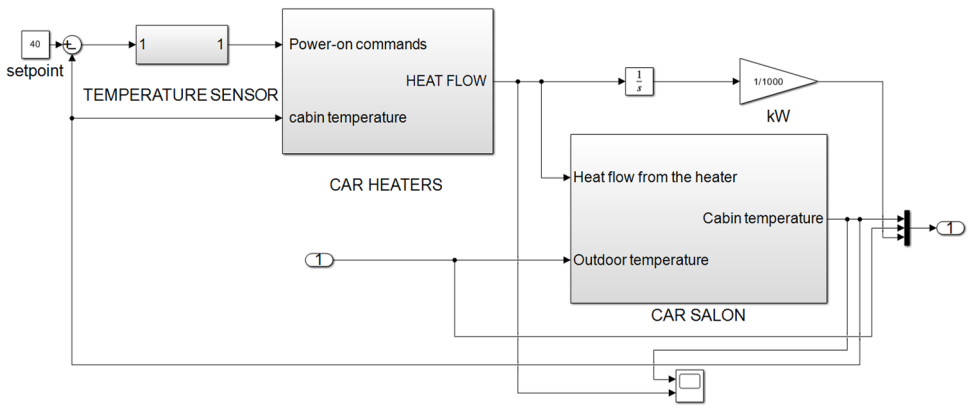

Fig. 4. Simulation model of a heater for heating an electric train car.

Thermostats installed in the car allow you to maintain the appropriate temperature set by the driver. In general, the process of supplying heat to the car is represented by the following equation:

$$\frac{dQ}{dt} = (T_{heat} - T_{car}) \cdot M_{air} \cdot c$$

where, T_{heat} – temperature of hot air supplied to the car from the heater; T_{car} – current air temperature in the car; M_{air} – mass air flow through the heater; c – specific heat capacity of air.

The modern classification of the topology of hybrid drives is as follows: active, semi-active, passive [7]. Active topology is divided into the following types: series active topology, parallel active topology, isolated active topology, multi-level topology (Figure 5).

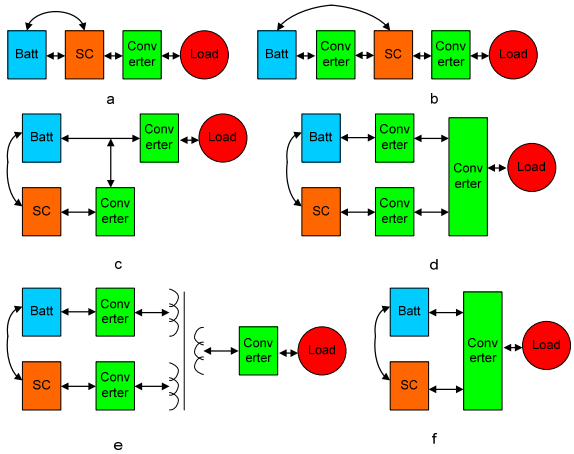

Fig. 5. Classification of hybrid topologies: a – passive; b – semi-active; c – row of active topology; d – parallel active; e – isolated active; f – multi-level.

The electric train simulation model (Figure 2) includes a hybrid energy storage device, the model of which is presented in Figure 6.

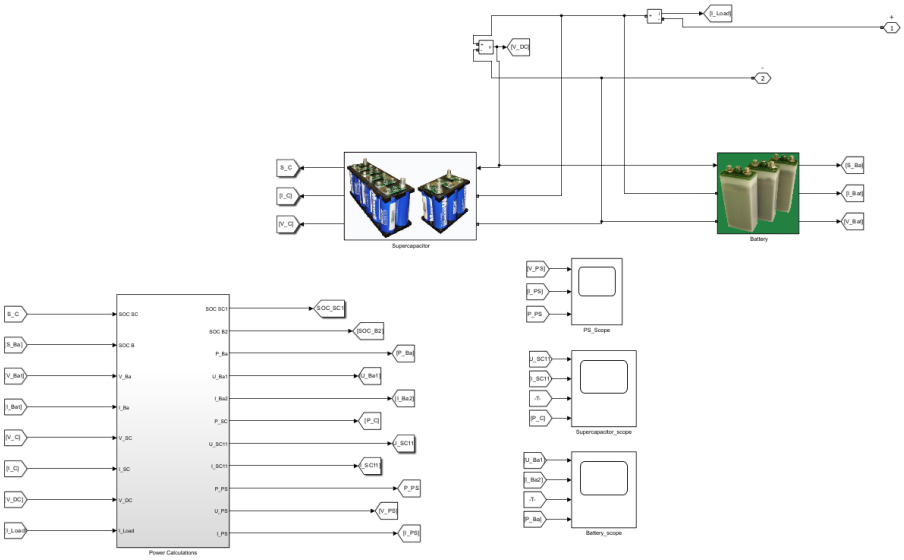

Fig. 6. Simulation model of a hybrid energy storage system.

The model of supercapacitors (Figure 7) and rechargeable batteries (Figure 8) is based on the corresponding discharge characteristics.

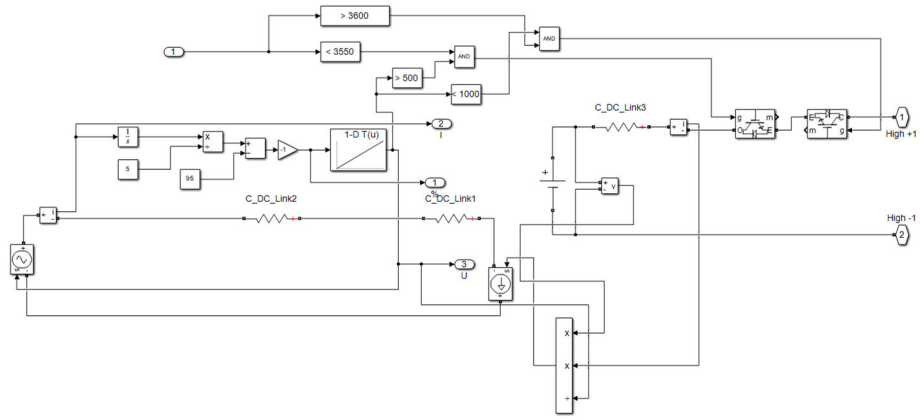

Fig. 7. Supercapacitor unit model.

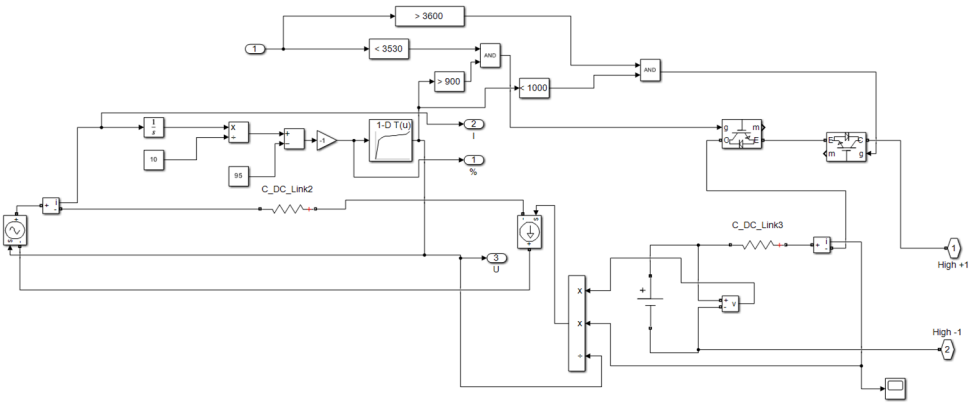

Fig. 8. Battery model.

3 Results and discussion

When implementing storage systems on multi-unit rolling stock, it is proposed to at least use the active topology of a hybrid storage device, since it is this type that is characterized by the ability to control the input or output power of modules and select a rational control algorithm depending on the assigned tasks. The control algorithm for a hybrid drive with an active topology is shown in Figure 9. The difference between this algorithm and the control algorithm for a drive with a passive topology is the dynamic change in the maximum value of the charge and discharge current in the corresponding modes. At the initial moment of time, the readiness of the device for operation and the voltage level at the current collectors of the electric train are determined. When the voltage on the current collectors of the electric train Umvps increases to the level U_{max}, corresponding to the regenerative braking mode of the electric train, and the voltage on the battery U_{accb} is below the maximum possible level Ucharge, corresponding to a full charge of the battery, the voltage on the SC U_{sk} is below the maximum possible level U_{zar}, corresponding to the full charge of the SC, battery and The SC switches to charging mode. In this case, the converter maintains a constant voltage value supplied to the terminals of the storage elements U_{in} and limits the charging current to the value $I_{zar\ max}$(t).

When the voltage at the current collectors of the electric train Umvps drops to the level Umin and the voltage at the battery and SC U_{akb} and U_{sk} is higher than the level U_{time} that provides discharge, the battery and SC switch to discharge mode to maintain the appropriate power on the traction motors. In this case, during the voltage drop on the storage elements, the energy converter maintains a constant level of the output voltage U_{out}, while reducing the current depending on the specified characteristic $I_{times\ max}$ (t).

If there are no conditions for the battery and SC to switch to discharge or charge mode, the storage device on the MVPS is in standby mode. Among other things, based on the above, the power of the machine converter on the ED4M is overestimated and, in theory, can be used to recharge the energy storage system with low currents. The operating algorithm provides for stopping the operation of the battery and SC in emergency modes.

The adopted simulation model uses two power semiconductor converters with bidirectional energy flow, one for each module (Figure 7, 8).

The simulation is performed under the assumption that power and energy losses in the converter are not taken into account. The energy intensity of batteries and supercapacitors is assumed to be 10 and 5 kWh, respectively.

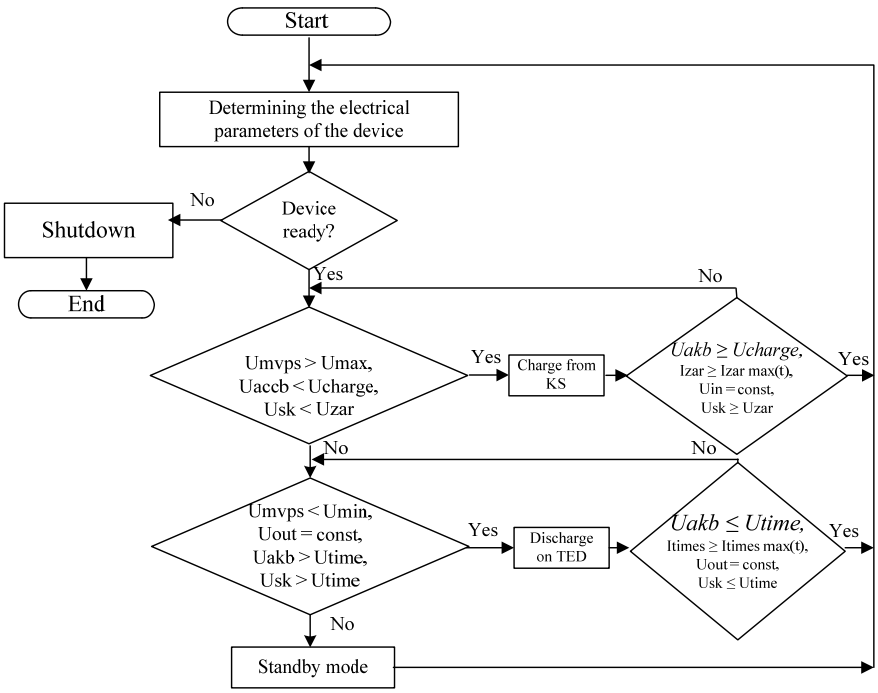

Fig. 9. Algorithm for the operation of the active topology of a hybrid drive.

Figure 10 shows the change in the current and voltage graph on the ED4M electric train during the trip. The specified current graph is used in the controlled current source of the electric train simulation model.

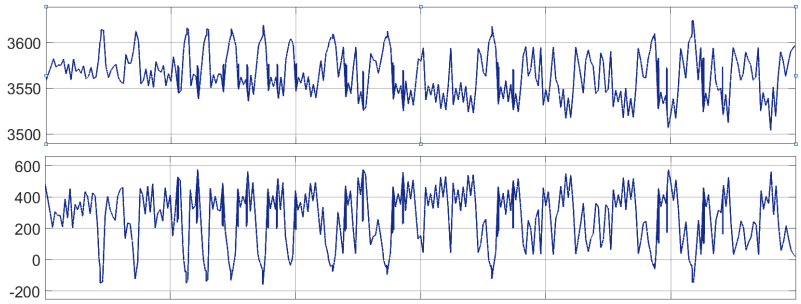

Fig. 10. Graph of voltage at the pantograph and current consumed by the electric train.

When performing the algorithm above (Figure 9), the operation of the battery looks like in Figure 11. The charge level does not drop below 80%, this has a positive effect on the battery life (there is no deep discharge). The battery is connected at the most difficult moment of electric train operation (significant decrease in voltage at the pantograph or its increase)

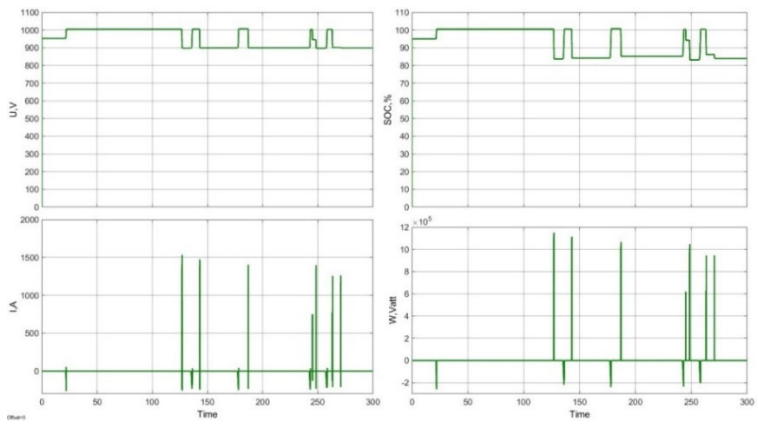

Fig. 11. Battery operation in charge/discharge mode.

The main work is done by the supercapacitor unit. Its work schedule is shown in Figure 12.

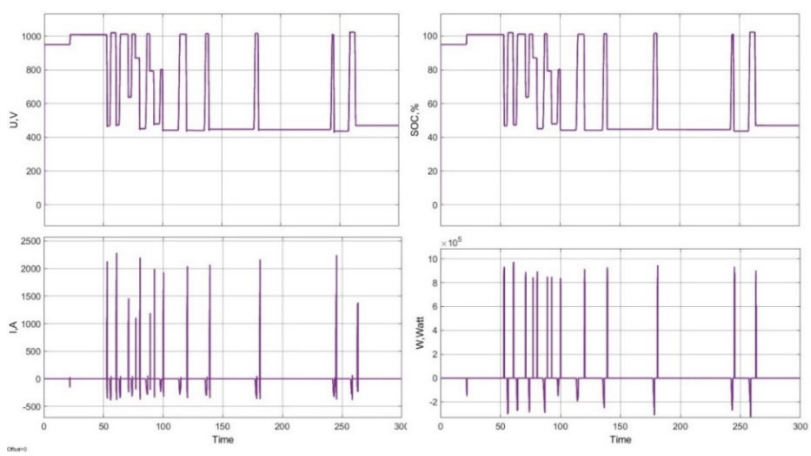

Fig. 12. SC operation in charge/discharge mode.

4 Conclusions

Simulation modeling will reduce the costs of implementing energy storage systems and shows fairly adequate results, and the implementation of control algorithms will select the most effective version of the system.

Algorithms for controlling energy storage systems are varied and allow not only to effectively manage charge/discharge modes and reduce the final cost of the storage device.

The conducted research makes it possible to identify a number of tasks that are relevant for the implementation of energy storage systems on multi-unit rolling stock, namely: the development of a more intelligent system for controlling the charge/discharge modes of storage devices, conducting a feasibility study for the implementation of energy storage systems and reaching a physical model of the storage system. Solving these problems will allow us to fully approach the problem of increasing the energy efficiency of multi-unit rolling stock.

«The research was carried out with the support of Russian Science Foundation Grant No. 22-79-00209**,** https://rscf.ru/project/22-79-00209/».

References

1. N. Khan, S. Dilshad, R. Rhalid, A. Kalair, N. Abas, J. Energy Storage **1**, 1-49 (2019)
2. C. Moraes, S. Brockveld, M. Heldwein, A. Franca et al., IEEE Transactions on Industrial Electronics **68**, 9081-9091 (2020)
3. Y. Wongthong, T.Rattanapanyalert, T. Supopat, C.Techawatcharapaikul, A Design of Energy Storage System for Electric Locomotive, in: *2021 9th International Electrical Engineering Congress (iEECON)* (Pattaya, Thailand)
4. V. Cheremisin, V. Nezevak, K. Domanov, A. Shatokhin. Improving the technology of operating electric locomotives using electric power storage device, in: *International Science Conference on Business Technologies for Sustainable Urban Development* (WOSCE, 2019) **110**, pp. 1–11
5. V.T. Cheremisin, V.L. Nezevak, A.P. Shatokhin, *Improving the DC traction power supply system with electrical energy storage devices at heavy train circulation areas* (Omsk State University of Communications, Omsk, 2018)
6. V. Cheremisin, V. Nezevak, A. Shatokhin, *International Scientific Conference Energy Management of Municipal Facilities and Sustainable Energy Technologies* EMMFT 2018. EMMFT-2018 2018. Advances in Intelligent Systems and Computing, **982** (Springer, Cham). https://doi.org/10.1007/978-3-030-19756-8_50
7. T. Zimmermann, P. Keil, M. Hofmann, M. F. Horsche, S. Pichlmaier, A. Jossen, J. Energy Storage **8**, 78-90 (2016)