Design Build an Off Grid Based Solar Power Plant System Using The Bidirectional Buck And Boost Topology In The Conservation Of Sea Pearl Turtles

Anggara Trisna Nugraha[1, a)] *Purwidi* Asri[2, b)], *Epyk* Sunarno[3, c)], *Rachma* Prilian Eviningsih[4, d)], *Zindhu* Maulana Ahmad Putra[5, e)], *Suci* Indaryani[6, f)], *Sindy* Yurisma Sheila[7, g)], *Nur* Wakhidatur Rochmawati[8, h)], *Yulian* Fatkur Rohman[9, i)], *Ari* Eka Surya Pramudika[10,j)]

Author Affiliations
[1,2,5,6,7,8,9,10]*Departmen of Marine Electrical Engineering, Shipbuilding Institute of Polytechnic Surabaya, Road Teknik Kimia, Keputih Sukolilo, Surabaya, 60111, Indonesia*
[3,4]*Departmen of Electronic Engineering, Electronic Engineering Polytechnic Institute of Surabaya, Road Raya ITS Kampus PENS Sukolilo, Surabaya, 60111*

Author Emails
[a)]anggaranugraha@ppns.ac.id
[b)]purwidi@ppns.ac.id
[c)]epyk@pens.ac.id
[d)]rachmaevin@pens.ac.id
[e)]zindhu@ppns.ac.id
[f)]suci.indaryani@ppns.ac.id
[g)]sindy.yurisma@student.ppns.ac.id
[h)]nurwakhidatur@ppns.ac.id
[i)]yulianfatkur@ppns.ac.id
[j)]aripramudika@student.ppns.ac.id

Abstract. Turtles are one of the fauna that is threatened with extinction. The cause of its extinction is inadequate management of conservation techniques. The Lantera Trenggalek Community sees the problem of the high operational costs of turtle conservation faced by the people of Masaran Village, Trenggalek, East Java. The operational costs of turtle conservation are high, including the costs of turtle feed, turtle maintenance and the electricity costs for turtle egg incubators reaching 1800 watts, so they require high PLN electricity. Therefore, this research aims to innovate to overcome partner problems by utilizing off grid PLTS using Bidirectional Buck and Boost Converter. The aim of using PLTS in Masaran village is to increase the availability of electricity sources at relatively low prices. However, in the PLTS implementation system, the electrical energy produced is unstable. So the PLTS system is equipped with batteries to store energy. The energy storage process requires a converter which functions to stabilize the output voltage of the PLTS. This research used Bidirectional Buck and Boost Converters because these converters are able to work in two directions so they can optimize the output voltage from PLTS. The results of testing the

PLTS system with Bidirectional Buck and Boost Converter show that when in buck mode, the converter output voltage can reach 14.4V which is used for battery charging. The output of this research is that the Off Grid PLTS system can produce maximum electrical energy so that it can overcome partner problems in increasing the turtle population.

1 INTRODUCTION

Indonesia is a country that has various types of fauna [1]. This condition is caused by Indonesia's strategic geographical area, high rainfall and vast archipelago. Although Indonesia has a variety of fauna, there is currently a scarcity and even extinction of various types of animals in Indonesia [2]. This rarity is caused by several factors, namely the rapid growth of population settlements, illegal logging and lack of public awareness. One of the endangered species of Indonesian fauna is the sea turtle [3]. The main factors causing sea turtle kills are related to inadequate management of sea turtle conservation techniques, disease and uncontrolled collection of sea turtles and their eggs [4].

Masaran Village, Trenggalek, East Java, has a beach that is used as a turtle habitat and turtle conservation. The turtle habitat in this village is decreasing every day, if left unchecked it will eventually become extinct. In this village there is a community called "Lentera Trenggalek", this community sees that the diminishing turtles are caused by the lack of facilities and infrastructure in turtle conservation. One of the lack of infrastructure is the availability of electricity which is inadequate because it requires high PLN power. Sea turtle conservation in this village consumes quite a lot of electrical energy because the total load reaches 1800 watts. In addition, this village often has blackouts due to disasters. Therefore, this research will utilize new renewable energy in the form of energy from the sun. The process of utilizing PLTS requires a converter to meet the electricity needs of the load.

Research on the utilization process of PLTS with bidirectional converters has been carried out by previous researchers. The first research conducted in 2019 focused on bidirectional DC-DC converters used for charge and discharge on batteries. The drawback of this research is that there is no method of charging the battery so that battery charging can be faster [5]. Furthermore, in 2020 research was conducted on the design and simulation of non-isolated bidirectional DC-DC converters using bidirectional buck-boost DC-DC converters with photovoltaic sources. This research has used the PI (Proportional Integral) control method to maintain a constant voltage on the output side both on the buck side and the boost side [6]. In 2021, research has been carried out that focuses on designing a bidirectional buck-boost converter. The advantages of this research have used the Proportional-Integral control method with triggering the bidirectional buck-boost converter using Pulse Width Modulation (PWM) to get a precise reference signal [7].

Based on existing references, research and service is carried out with the aim of carrying out innovations to overcome partner problems. This innovation is in the form of an off-grid based solar power generation system using a bidirectional buck and boost topology for turtle conservation. Generally, the electrical energy produced by solar power plants fluctuates so it requires batteries to be used to store energy. The energy storage process requires a converter so that the voltage for charging the battery is stable at 14.4V so as not to damage the battery.

Therefore, in this research a bidirectional buck and boost is used which can work in two directions. This converter will work in two modes, namely buck (charging) when the power produced by the solar panels is more than the load requirements and boost (discharging) when the power produced by the solar panels is less than the load requirements [8]. The output of this research is that the Off Grid PLTS system can produce maximum electrical energy so

that it can overcome the problems of Masaran Trenggalek Village in increasing the turtle population.

2 MATERIALS AND METHOD

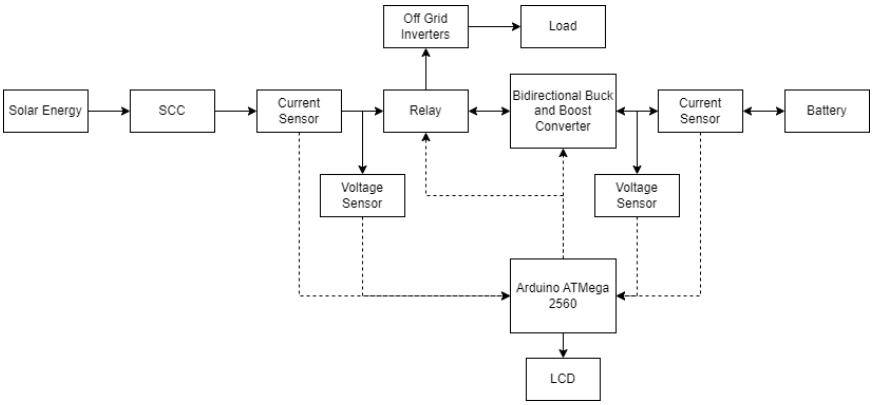

FIGURE 1. Diagram block

The working principle of this system has 2 input sources, namely a source of electricity from solar energy and a source of electricity from batteries. The main source of solar energy will be converted by solar cells to produce electricity. The output of solar cells will be stabilized by solar charge control which will then be read by current and voltage sensors. The readings from the sensor will be sent by the bidirectional converter. If from the sensor reading the power generated by the solar cell is more than the load demand then this system can enter into the battery charging process. In determining the PWM value, current and voltage sensors are needed as feedback to the microcontroller. During the process (charge and discharge process), the current and voltage sensors continue to work to monitor the input and output of the bidirectional converter circuit. In the input and output process, Arduino Uno is needed which will be represented with a duty cycle to control the bidirectional converter. Input from current and voltage sensors will be processed by Arduino Uno to produce a stable voltage output. For the second input source is to use a battery. If the power generated by the solar cell is less than the load demand, the battery will work in boost (discharge) mode to help PLTS in supplying the load.

2.1 Solar Power Plant

PLTS is one of the new renewable energies that converts solar energy or solar heat into electrical energy [9]. Sunlight is a form of energy from natural resources that are abundant in Indonesia [10]. This solar energy has been widely used to supply electrical power because it can produce an unlimited amount of energy. Currently, many people utilize energy because it has many advantages, one of which is that it can save electricity costs. This PLTS consists of several components, namely, solar panels, charger controller, battery and inverter [11].

2.2 Solar Panel

Solar panels are a device that converts solar energy into electrical energy with the photovoltaic effect process, hence the name photovoltaic cell (Photovoltaic cell - abbreviated

as PV) [12]. Solar panels are made of semi-conductor materials that will release electrons when there is stimulation from sunlight so that it will cause an electric current. Silicon is one of the semi-conductor materials that are often used by solar panels, in silicon there are at least two layers, namely positively charged and negatively charged layers that can form a flow of electrons or what is usually called DC current. The magnitude of the current gate is directly proportional to the amount of incoming sunlight intensity. As a result of the amount of current produced is directly proportional to the intensity of sunlight, it is not the same between sunny weather conditions and cloudy weather conditions.

2.3 Battery

The battery is a component to store electrical energy from the solar power plant [13]. The battery is a component to provide power to the load when the solar module cannot provide overall power to the load and store the power generated by the solar module in case of excess [14]. Batteries in PLTS are usually deep cycle types that can produce stable currents for a long time. One type of battery that is commonly used in solar power plants is lead acid batteries.

2.4 Inverter

An inverter is an electronic device that converts direct current (DC) into alternating current (AC) [15]. Inverters play an important role in PLTS because the current produced by PV modules is direct current (DC) while the current used in electrical equipment and electrical networks in general is in the form of alternating current (AC) [15] The output of an inverter can be an AC voltage by forming a sine wave, square wave and sine wave modified. To convert the voltage from DC to AC voltage the inverter requires a multivibrator [16].

2.5 Bidirectional Buck and Boost Converter

The purpose of the Bidirectional Buck and boost Converter is to regulate the DC bus voltage through battery charging-discharging settings through a bidirectional buck and boost converter [17]. Bidirectional converter has 2 operating modes and 1 command mode to disconnect the power flow, namely charging mode, discharging mode, and off mode [18]. The triggering of the Bidirectional DC- DC Converter uses Pulse Width Modulation (PWM) to obtain a precise reference signal. The following is the Bidirectional Buck and boost Converter circuit that will be used in this study [19].

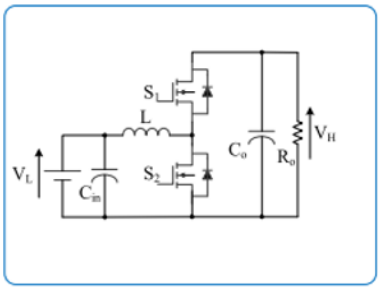

FIGURE 2. Bidirectional buck and boost converter circuit [20]

2.5.1 Mode Boost

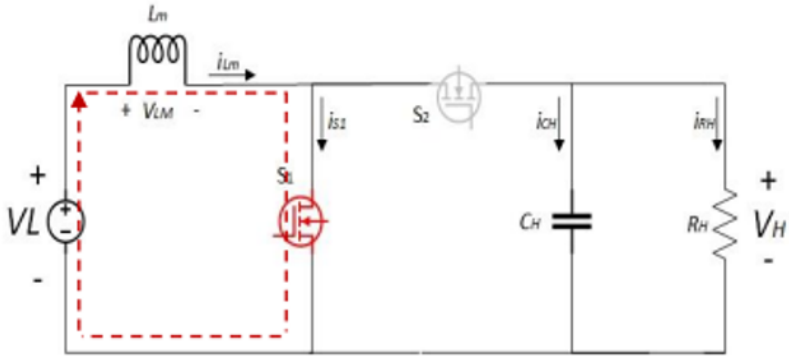

FIGURE 3. Equivalent Circuit of Boost Mode When S1 is ON and S2 is OFF

FIGURE 3 is the equivalent circuit of boost mode when S1 is ON and S2 is OFF. During boost mode, the low voltage side (VL) becomes input and the high voltage side (VH) becomes output. Because this condition causes the power flow to come from the low voltage side to the high voltage side. Boost mode is a condition where S1 is in the ON state, which is the main switch, while S2 is in the OFF state and only the flying diode works. This aims to ensure that the current from the load side does not return to the source side

2.5.2 Mode Buck

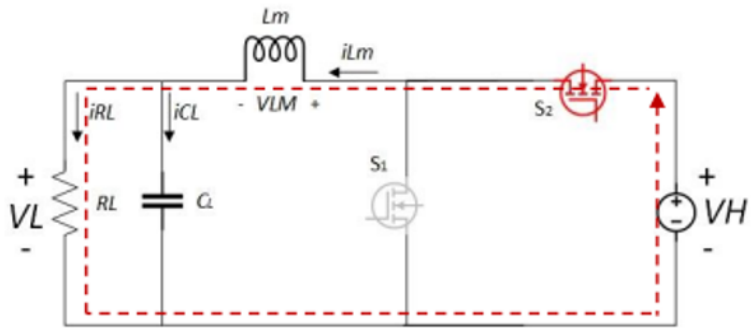

FIGURE 4. Buck Mode Equivalent Circuit When S2 is ON and S1 is OFF

FIGURE 4 depicts an equivalent configuration with buck mode, where the low voltage is used as output (VL) and the high voltage is used as input (VH). Therefore, the power flow flows from low voltage to high and back to low. When S2 is active, S2 acts as the main switch, while S1 is deactivated, so that what functions is the fly diode. The flying diode's job is to inhibit the flow of current so that it does not return to the voltage source.

3 RESULT

Based on the system design that has been proposed, the converter testing process is carried out. Bidirectional buck and boost converter testing was carried out using two methods. The first method is testing in buck mode and the second is testing in boost mode. The working system in this test is when the solar panel has an output voltage of more than 19 volts, the bidirectional converter system will work in buck mode which is used for charging the battery. However, when the output voltage of the solar panel is less than 19 volts, the system will

work in boost mode which is used to supply the load. Testing when in buck mode is expected that the voltage from the solar panel can match the set point voltage, which is 14.4 volts. Meanwhile, during boost mode, it is hoped that the output voltage can match the set point of 24 volts. On table 1 is bidirectional test data in buck and boost converter mode.

TABLE 1. Test Data in Buck Mode

Buck Mode										
Vin (V)	Iin (A)	D	Vo (V)	Vo teory (V)	Io (A)	R (Ω)	Pin (VA)	Po (VA)	Eff (%)	Error (%)
20	0.39	73	14,42	14,4	0.48	30	7.80	6,92	89%	0,14
22	0.35	66	14.40	14,4	0.48	30	7,70	6,91	90%	0
24	0.32	59	14.38	14,4	0.48	30	7,68	6.90	90%	0,14
26	0.3	52	14.38	14,4	0.48	30	7.80	6.90	88%	0,14
28	0.28	46	14,41	14,4	0.48	30	7,84	6,92	88%	0,07
30	0.26	40	14.37	14,4	0.48	30	7.80	6.90	88%	0,21
32	0.24	34	14.35	14,4	0.48	30	7,68	6.89	90%	0,35
34	0.23	28	14,42	14,4	0.48	30	7,82	6,92	89%	0,14
								Average	89%	0,15

Based on the tests that have been carried out, it can be seen that the bidirectional converter when in buck mode can reduce the voltage according to the set point of 14.4 with different duty cycle values. The duty cycle value greatly affects the voltage output so it needs to be considered when looking for the right duty cycle. The average efficiency obtained is 89%. In these conditions it can be concluded that the converter has functioned as needed, namely used for charging batteries.

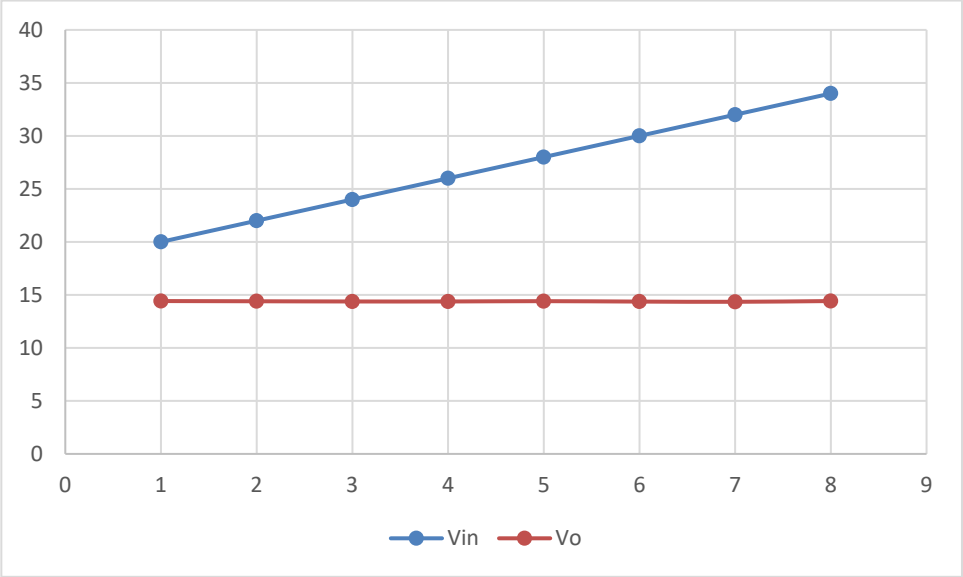

FIGURE 5. Graph of Input Voltage Comparison with Buck Mode Output

In the graph it can be seen that the output produced in buck mode is stable at a voltage of approximately 14.4 volts with a changing input voltage. Which input voltage starts from 20 volts, this is because the set point used during buck mode is more than 19 volts.Table 2 shows the results of testing the bidirectional converter in boost mode.

TABLE 2. Test Data in Boost Mode

Boost Mode										
Vin (V)	Iin (A)	D	Vo (V)	Vo teory (V)	Io (A)	R (Ω)	Pin (VA)	Po (VA)	Eff (%)	Error (%)
12	1.87	54	24.10	24,4	0.80	30	22.44	19.28	86%	0,42
13	1.65	49	24.15	24,4	0.80	30	21.45	19.32	90%	0,62
14	1.59	44	24.08	24,4	0.80	30	22.26	19.27	87%	0,33
15	1.44	40	24.12	24,4	0.80	30	21.60	19.30	89%	0,50
16	1.39	36	24.08	24,4	0.80	30	22.24	19.26	87%	0,33
17	1.35	33	24.10	24,4	0.80	30	22.95	19.28	84%	0,42
18	1.22	29	24.02	24,4	0.80	30	21.96	19.22	88%	0,08
19	1.15	24	24.11	24,4	0.80	30	21.85	19.29	88%	0,46
								Average	87%	0,40

Based on table 2 it can be seen that during boost mode, the converter has been able to issue an output voltage according to the set point of 24 V from an input voltage of 11-19 volts. The efficiency generated during boot mode is also fairly good at 87%. With these conditions it can be concluded that the converter can be implemented.

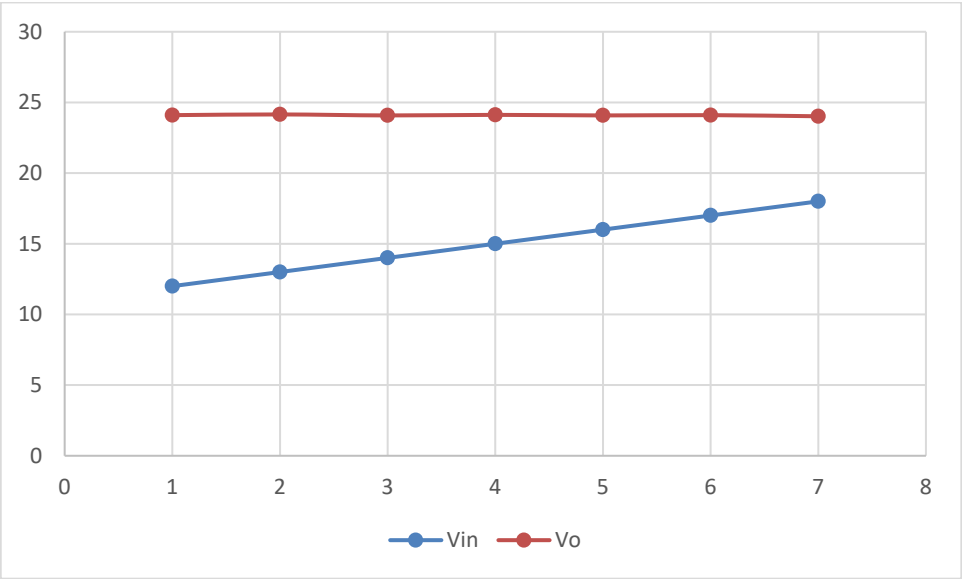

FIGURE 6. Graph of Input Voltage Comparison with Output Boost Mode

From graph 2 it can be seen that the resulting output is stable at 24 volts. While the input used varies with the lowest voltage of 11 volts and the voltage limit for boost mode is 18 volts.

Table Description:

- Vin = Input Voltage (V)
- Iin = Input Current (A)
- D = Duty Cycle

- Vo = Output Voltage (V)
- Vo Teory = Theory Output Voltage (V)
- Io = Output Current (A)
- R = Obstacle (Ω)
- Pin = Input Power (Watt)
- Po = Output Power (Watt)
- Eff = Efisiensi (%)

4 DISCUSSION

Solar power generation using a bidirectional buck and boost converter topology is a type of converter that is capable of working in two directions which can be applied to renewable energy. The difference between the research conducted and previous research is that in previous research many conventional converters were still used. This conventional converter has the disadvantage that it is only able to work in one direction so that if applied in this research it can only be used for charging batteries. Therefore, in this research a bidirectional buck-boost converter is used which can work in two directions which can be used for charging the battery and supplying it to the load.

5 CONCLUSION

Based on the results of the tests that have been carried out, it can be concluded that an offgrid-based solar power generation system using a bidirectional buck and boost topology in turtle conservation can produce voltage and electrical energy according to a predetermined setpoint. This can be seen in the converter being able to work in two directions in accordance with the previous concept. When in buck mode with a minimum voltage limit of 20 volts, it can produce a stable voltage output of 14.4 volts which is used for charging the battery. When in boost mode, the voltage limit for this mode is 19 volts, it can produce an output voltage of 24 volts to supply the load. Apart from that, this converter has a high efficiency value of 89% in buck mode and 87% in boost mode. Therefore, a high efficiency value can be said to mean efficient energy use. From the success of this research, greater development can be carried out in order to produce maximum electrical energy

REFERENCES

1. R. I. Maulany, A. Mutmainnah, N. Nasri, A. Achmad, and P. O. Ngakan, "Tracing current wildlife trade: An initial investigation in makassar city, indonesia," *For. Soc.*, vol. 5, no. 2, pp. 277–287, 2021, doi: 10.24259/fs.v5i2.9097.
2. D. Bergin, S. C. L. Chng, J. A. Eaton, and C. R. Shepherd, "The final straw? An overview of Straw-headed Bulbul Pycnonotus zeylanicus trade in Indonesia," *Bird Conserv. Int.*, vol. 28, no. 1, pp. 126–132, 2018, doi: 10.1017/S0959270917000302.
3. F. R. Harjiyatni *et al.*, "Sea Turtle Protection: A Case Study of Protected Sea Turtle Capture in Gunungkidul Regency, Indonesia," *IOP Conf. Ser. Earth Environ. Sci.*, vol. 1030, no. 1, 2022, doi: 10.1088/1755-1315/1030/1/012018.
4. R. Rudianto and G. Bintoro, "Future Turtle Management: Opportunities for Habitat Restoration Governance in East Java, Indonesia," *Int. J. Environ. Agric. Biotechnol.*, vol. 3, no. 5, pp. 1721–1731, 2018, doi: 10.22161/ijeab/3.5.20.
5. P. Sulistomo, I. Setiawan, and M. Facta, "Implementasi Pengendalian Sistem Pengisian/Pengosongan Baterai Pada Sistem Photovoltaic Stand-Alone Menggunakan Bidirectional Converter Dengan Metode Proportional-Integral Berbasis Mikrokontroler Dspic30F4011," *Transient*, vol. 7, no. 4, p. 832, 2019, doi: 10.14710/transient.7.4.832-837.
6. Armadilla Sukma Pratiwi, Syechu Dwitya Nugraha, and Epyk Sunarno, "Desain dan Simulasi Bidirectional DC-DC Converter untuk Penyimpanan Energi pada Sistem Fotovoltaik," *J. Nas. Tek. Elektro dan Teknol. Inf.*, vol. 9, no. 3, pp. 305–310, 2020, doi: 10.22146/.v9i3.377.
7. Hamlah Nadela Ilif Baridatul Jannah and H. Hariyadi, "Implementasi Kontrol Proportional - Integral Pada Bidirectional Converter Untuk Sistem Pengisian Baterai Turbin Angin," *J. Appl. Smart Electr. Netw. Syst.*, vol. 2, no. 01, pp. 30–35, 2021, doi: 10.52158/jasens.v2i01.194.
8. S. Battula, M. Mohan Garg, A. Kumar Panda, M. Preetam Korukonda, and L. Behera, "Analysis and Dual-loop PI Control of Bidirectional Quasi Z-Source DC-DC Converter," *IECON Proc. (Industrial Electron. Conf.*, vol. 2020-October, pp. 2939–2944, 2020, doi: 10.1109/IECON43393.2020.9255017.
9. Yanatra Budi Pramana, A. Solikin, A. Faisal, D. A. Walujo, Rusdiyantoro, and M. A. Titisari, "Manufacture of Solar Panel with 300W Inverter for Household Electricity Needs," *Tibuana*, vol. 5, no. 01, pp. 41–45, 2022, doi: 10.36456/tibuana.5.01.4604.41-45.
10. A. D. W. M. Sidik and Z. Akbar, "Analyzing the Potential for Utilization of New Renewable Energy to Support the Electricity System in the Cianjur Regency Region," *Fidel. J. Tek. Elektro*, vol. 3, no. 3, pp. 46–51, 2021, doi: 10.52005/fidelity.v3i3.66.
11. B. Harianto and M. Karjadi, "Planning of Photovoltaic (PV) Type Solar Power Plant as An Alternative Energy of the Future in Indonesia," *ENDLESS Int. J. Futur. Stud.*, vol. 5, no. 2, pp. 182–195, 2022, doi: 10.54783/endlessjournal.v5i2.87.
12. M. W. Aljibory, H. T. Hashim, and W. N. Abbas, "A Review of Solar Energy Harvesting Utilising a Photovoltaic–Thermoelectric Integrated Hybrid System," *IOP Conf. Ser. Mater. Sci. Eng.*, vol. 1067, no. 1, p. 012115, 2021, doi: 10.1088/1757-899x/1067/1/012115.
13. J. Koskela, A. Rautiainen, and P. Järventausta, "Using electrical energy storage in residential buildings – Sizing of battery and photovoltaic panels based on electricity cost optimization," *Appl. Energy*, vol. 239, no. October 2018, pp. 1175–1189, 2019, doi: 10.1016/j.apenergy.2019.02.021.
14. J. Liu, X. Chen, S. Cao, and H. Yang, "Overview on hybrid solar photovoltaic-

electrical energy storage technologies for power supply to buildings," *Energy Convers. Manag.*, vol. 187, no. December 2018, pp. 103–121, 2019, doi: 10.1016/j.enconman.2019.02.080.

15. N. Evalina, A. Azis H, Rimbawati, and Cholish, "Efficiency analysis on the inverter using the energy-saving lamp," *IOP Conf. Ser. Mater. Sci. Eng.*, vol. 674, no. 1, 2019, doi: 10.1088/1757-899X/674/1/012034.
16. M. Kozak, "Alternating Current Electric Generator Machine Inverters in a Parallel Power Sharing Connection," *IEEE Access*, vol. 7, pp. 32154–32165, 2019, doi: 10.1109/ACCESS.2019.2902647.
17. S. A. Gorji, H. G. Sahebi, M. Ektesabi, and A. B. Rad, "Topologies and control schemes of bidirectional DC–DC power converters: An overview," *IEEE Access*, vol. 7, pp. 117997–118019, 2019, doi: 10.1109/ACCESS.2019.2937239.
18. S. Sunkara and N. Kondrath, "Design and PSpice simulation of synchronous bidirectional PWM DC-DC buck-boost converter operating in CCM," *2013 Annu. IEEE India Conf. INDICON 2013*, no. 2, pp. 0–5, 2013, doi: 10.1109/INDCON.2013.6725989.
19. V. V. and V. S. R. R., "Microcontroller based bidirectional buck–boost converter for photo-voltaic power plant," *J. Electr. Syst. Inf. Technol.*, vol. 5, no. 3, pp. 745–758, 2018, doi: 10.1016/j.jesit.2017.04.002.
20. F. Caricchi, F. Crescimbini, F. G. Capponi, and L. Solero, "Study of bi-directional buck-boost converter topologies for application in electrical vehicle motor drives," *Conf. Proc. - IEEE Appl. Power Electron. Conf. Expo. - APEC*, vol. 1, pp. 287–293, 1998, doi: 10.1109/apec.1998.647705.