Development of Low-Speed Generator for Rural Energy Self Power Plant

Muhammad Alfian Mizar[1], *Mokh. Sholihul* Hadi[2], and *Hasan* Ismail[1*]

[1]Department of Mechanical Engineering, Universitas Negeri Malang, Malang, East Java, Indonesia 65114
[2]Department of Electrical Engineering and Informatics, Universitas Negeri Malang, Malang, East Java, Indoneisa 65114

Abstract. This study investigates the potential for wind energy generation in various regions of Indonesia, which have been identified to potentially produce over 100 megawatts (MW) of electrical energy. In response to the need for rural electrification and the utilization of this wind potential, we developed a low-speed generator suitable for rural, energy-independent power plants. The objectives were twofold: to design a low-speed generator optimized for low rotational speeds reflective of local wind conditions, and to assess its performance in electricity generation. Our research methodology encompassed an analytical comparison of exploratory data and literature to devise a generator design compatible with rural wind patterns. This involved calculating the necessary wind acceleration to actuate the designed generator. Subsequently, a prototype was designed, constructed, and tested, examining variables such as iron core composition, winding wire, magnetic strength, and electrical output under wind-driven conditions. The performance tests revealed that the Low-Speed Generator produced an average voltage output scaling with rotational speed—from 5.3V at 100rpm to 21.1V at 500rpm. The peak voltage output at 500rpm rotation reinforces the generator's efficacy in higher rotational regimes. Such findings advocate for the Low-Speed Generator's application as a sustainable solution to the rural energy crisis, aligning with the broader objectives of equitable energy distribution and the Sustainable Development Goals (SDGs).

1. Introduction

In the narrative of modern civilization, the advent of affordable fossil fuels has been a cornerstone, underpinning industrialization and facilitating social progress over the past centuries [1]. In the Indonesian context, fossil fuels constitute a staggering 95% of the nation's energy consumption, as noted by Kusumastanto [2]. However, the nation's heavy reliance on fossil fuels is an unsustainable trajectory, with oil reserves estimated to be less than 9 billion

* Corresponding author: hasan.ismail.ft@um.ac.id

barrels—depletable within the next two decades at the current extraction rate of 500 million barrels per year. This, coupled with the environmental detriments of fossil fuel consumption, casts a pressing need for alternative energy solutions [3].

Renewable energy emerges as a beacon of potential amidst this looming energy crisis. However, the erratic nature and inherent instability of some renewable sources necessitate the design of energy systems that are not only safe and reliable but also intelligent in operation [4-6].

Focusing on the electrification ratio, a significant indicator of energy accessibility, Indonesia has seen commendable progress, yet as of 2017, only 92.8% of the populace had access to electricity [7]. This statistic is a stark reflection of the broader challenge highlighted by the International Energy Agency: approximately 23 million Indonesians, predominantly in remote and insular regions, remain off the grid [8].

Wind energy, a formidable constituent of Non-Renewable Energy (NRE) potentials, is poised for utilization. The global capacity of Wind Power Plants (WPP) has seen a tenfold increase over the past decade [9], and corroborating this trend, the Indonesian Ministry of Energy and Mineral Resources year 2018 identified several regions with wind energy potential exceeding 100 megawatts (MW).

This paper addresses the critical need and latent potential for rural electrification through the development of a low-speed generator tailored for energy-independent power plants. Such innovation not only aligns with the aspirations to enhance energy independence in rural and underserved areas but also encapsulates a response to the uneven distribution of energy. The initiative for low-speed generator development is grounded on multifaceted considerations—technical, economic, and environmental safety—aiming to establish a sustainable and equitable energy landscape in line with the Sustainable Development Goals (SDGs).

2. Materials and Method

2.1 Research Design and Procedure

To fabricate a Low-Speed Generator (LSG) apt for a region's wind potential, a multi-step procedure was employed: Initially, wind data from an exploratory study were analyzed and juxtaposed with literature to inform the LSG's design, factoring in rural wind characteristics and calculating required wind acceleration for optimal rotation. Following design finalization, the LSG was constructed, ensuring adherence to low-speed wind conditions. Comprehensive performance testing ensued, examining variables such as iron core composition, winding wire type, magnetic strength, and electrical output under wind-driven conditions. Field applications of the prototype informed subsequent refinements, enhancing efficiency and reliability for rural use. The culmination of this methodology was an engineered LSG product, compatible with a verified wind power drive system, poised for addressing rural energy needs.

2.2 Wind Measurement

Wind potential measurements were conducted using an empirical approach based on the Beaufort scale. This involved employing a flag apparatus affixed to a bamboo pole, with the pole extending 6 meters in height and the flag measuring 40 x 60 cm. Over the course of one week, the flag's movements were meticulously recorded to derive accurate wind speed data. The collected data were systematically cataloged in Observation Table 1, which serves as a reference for the study's findings on local wind dynamics.

Table 1. Wind Speed Data.

No	Day and Date	Time	Wind Velocity	Notes
1	Monday	06.00-08.00 08.00-12.00 12.00-24.00 24.00-06.00	m/s	Boufort Scale 12.13.14.15
2	Tuesday			

Based on the acquired data, we can determine the suitability of the area for wind power generation. Should the area be deemed appropriate, we will advance to the design and production phase of the equipment. Conversely, if the location is unsuitable, we will explore alternative solutions for the utilization of natural energy.

2.3 Determination of Location Points

The determination of the location involves collaboration with local stakeholders, , and Community Association, where the equipment will be installed. The purpose of this is to provide information about the intentions and objectives behind the development of the wind power plant. Socialization and information that help residents understand the system's workings and functions will inspire the local community to maintain and preserve the equipment for future use. Put simply, if there are residents interested in being involved in the construction process, it will significantly impact the security of the equipment. Technicians responsible for maintenance, care, and repairs will also be sourced from local residents who have the necessary technical skills in electricity.

2.4 Low Speed Generator Design

The design phase of the low-speed generator commences with the selection of an appropriate stator, followed by the winding of coils, and culminates with the functional testing of the generator. Upon verification that the generator operates effectively with the available wind potential at the chosen location, the next step involves integrating it into the marketable Wind Power Plant (WPP) system. This integration encompasses the fabrication of components such as the rotor blades, gearbox, safety mechanisms, and support structures.

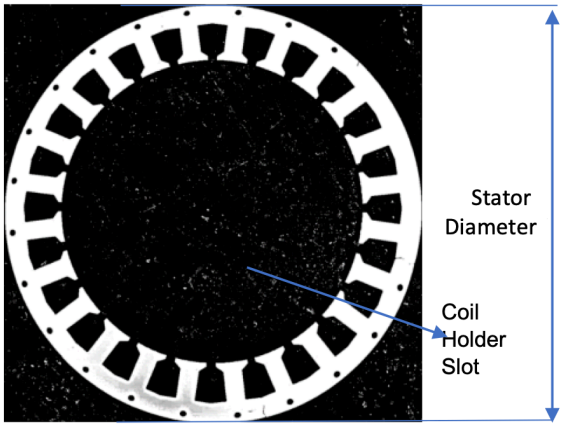

Fig. 1. The proposed Stator with 24 Grooves

Upon acquisition of the stator, the subsequent procedure involves the careful insertion of enameled wire into the designated slots. The wiring is meticulously arranged using a concentric winding system, incorporating a three-phase configuration with 1 mm diameter

wire. The design specifications include a stator with six poles and a rotor comprising twelve poles, ensuring optimal magnetic interaction for the generation process.

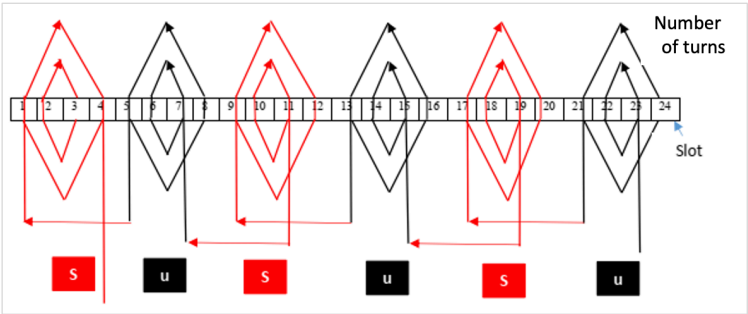

Fig. 2. Stator Coil Schematic

The rotor of the low-rotation generator employs NdFeb-type permanent magnets, each measuring 30 mm x 5 mm x 5 mm. These magnets are securely affixed to the rotor using both bolt reinforcements and adhesive application to ensure safety during high-speed rotations.

2.5 Data Analysis and Its Instrument

The operational performance of the wind power generation system is meticulously documented in a monitoring table, which facilitates the evaluation and further enhancement of the system. For each variable treatment combination, we conduct performance testing in quintuplicate to ascertain the system's output relative to the available wind potential and to determine the electrical load capacity, as detailed in Table 2. Subsequently, we compile an average capacity graph for each variable combination, enabling a comprehensive analysis of system efficacy.

Table 2. Observation of PLTB performance results.

No	Day/ Date	Wind Velocity	Output	Notes
1		m/s	Volt	load / no load
2		m/s	Volt	load / no load
3		m/s	Volt	load / no load
4		m/s	Volt	load / no load

3. Results and Discussion

3.1 Stator Design

The initial stage of making a low-speed generator begins with the design and production of a rotor-stator consisting of 24 slots. The stator is a stationary part that will be occupied by the enamel guard, while the rotor is a moving part that is placed by a Fe magnet. The stator-rotor material is made of an iron core having the construction as shown in Figure 3. the following. Both ends of the stature are equipped with housings and bearings that facilitate the process of lubrication and repair if there is damage.

Fig. 3. Stator-Rotor

The second stage is the coil design of the enamel wire which is placed on the stator, the low rotation generator winding design that we tried is, the double layer type. At this stage, it is carried out after the stator-rotor is available for a low-speed generator whose output results are 3 phases, on the stator each phase consists of 4 poles (poles), of 24 slots (groove) on the stator.

The initial steps in planning the stator rotor include:

1. Calculate the electrical angle 24/2 x 360 = 720.
2. Then calculate the slot/pole (Coil Pitch) 24/4 = 6
3. Then calculate Slot/pole/phase = 6/3 = 2
4. Then calculate the angle/slot = 720 /24 = 30 percent

5 For 3 phase 120 degree = 120 / 30 = 4

The application on the R stator winding design starts at slot 1, then Y =1+4 = 5 (fifth slot) then B ; 5 + 4 = 9 slot number nine)

R----> 1

Y----> 5

B-----> 9

The Roll design drawings are as in Fig. 4.

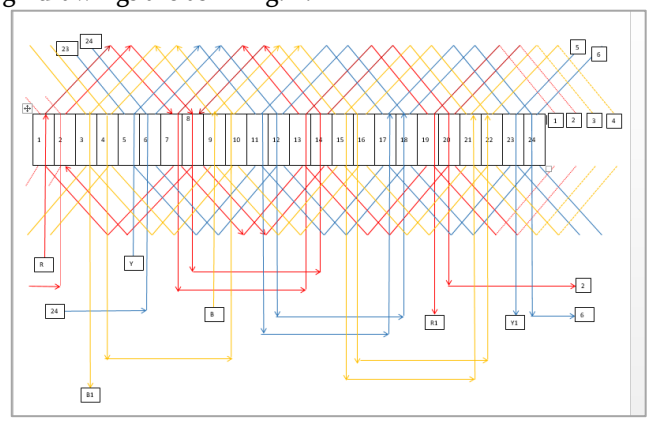

Fig. 4. Wire reel design

The arrangement of the connections of this generator is stellar, as shown in Fig. 5.

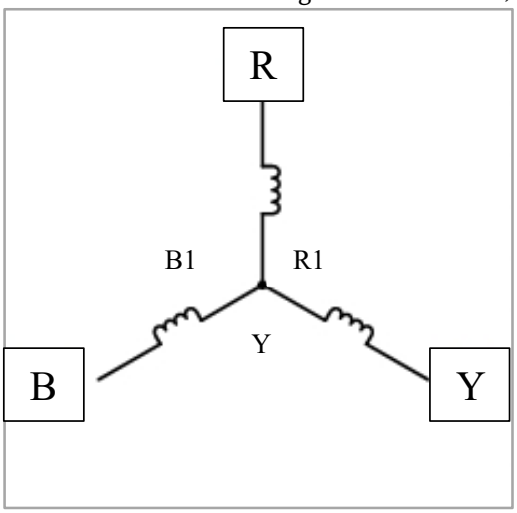

Fig. 5. Wire connection arrangement

Three-wire coil lines, at the generator stator position, are arranged using a double layer technique, all three have an angle of 1200. Each coil has two ends of the wire, one end of which is connected to the other end of the coil wire in a wye (Y) or star configuration as shown above. While the other ends of the coil wire function as outputs to channel AC electrical energy that is generated towards the load.

After being neatly arranged, reinforcement is carried out by adding stitches and tidying up the cable connection. Provide an insulator in each slot and add reinforcement in the form of bamboo to close the position of the windings with the stator.

Fig. 6. Wire winding results

3.2 Rotor Manufacturing

The rotor is a moving part that rotates clockwise or counterclockwise. Alternating rotation of the rotor still generates low-speed generator electricity. The rotor part consists of a magnet housing and a neodymium magnet, a magnet that has a very strong magnetic power, is permanent and stable.

Because the magnetic power is static and cannot be increased or decreased, the output power of this low-speed generator is also limited to a certain point, according to the magnetic power that is paired.

Fig. 7. Rotor and Magnet Arrangement

There are 12 magnets at each pole, 10mm wide, 25mm long and 5mm thick. The total number of poles is 4 (four). The magnet is placed on the magnet housing and hooked to the stator, so it is safe when rotated at high speed.

3.3 Finishing and Product Inspection

After assembling and installing the output cable, the next step is to complete and inspect the product, in which this stage performs bearing adjustment, lubrication, and arrangement of the holder so that the generator is ready to be tested. In this activity, the low-speed generator is connected to an electric motor whose speed can be adjusted using a 220-volt input working voltage dimmer.

Fig. 8. Product Inspection

Generator output with 3 phases in the form of 3 output cables is connected to the AC voltage measuring system using a needle model measuring scale and a digital system.

After checking the cable connections on the measuring instrument and the drive, the next step is to test the relationship between the rotational speed and the electricity generated

3.4 Trial and Data Collection

The equipment used in the low-speed generator trials are:

1. Tachometer
2. Digital Ampere Pliers
3. AVO meter
4. Dimmer

The tachometer is used to measure rotational speed by reading paper illuminated by infrared. Digital ampere pliers have a function as an electric current reader at the same time can also be used to measure the voltage issued by the generator with the output data in the form of digital data

Fig. 9. Measuring Instrument

Table 3. Results Of Voltage Measurement (Volt-DC) On Variations in Rotation (rpm) Low Speed Generator

Rotation/minutes (rpm)		100	200	300	400	500
Voltage (Volt) – DC	1	5,3	7,3	13,5	16,3	20,2
	2	5,5	6,8	12,6	16,5	20,4
	3	5,2	7,2	13,2	15,8	19,7
Average		5,3	7,1	13,1	16,2	20,1

4. CONCLUSION

In conclusion, our study has demonstrated the efficacy of a Low-Speed Generator in harnessing wind energy to produce electricity. Empirical data indicates a positive correlation between rotational speed and voltage output, with the generator producing an average voltage

of 5.3V at 100rpm, escalating to 21.1V at a rotation of 500rpm. This linear relationship highlights the generator's capacity to produce a substantial voltage output at higher rotational speeds, with the peak voltage achieved at 500rpm. These findings not only reinforce the potential of Low-Round Generators in renewable energy applications but also suggest scalability for larger power generation needs. Future work could focus on optimizing the efficiency of the generator at varying wind speeds, integrating energy storage solutions, and evaluating the long-term performance of the generator in real-world environmental conditions. The promising results of this study advocate for further research and development in low-cost, efficient wind energy conversion systems, which are pivotal for the advancement of sustainable energy technologies.

The author wishes to extend his sincerest appreciation to Universitas Negeri Malang for their generous support in funding this research. Special thanks are due to the chairperson, whose guidance was invaluable, as well as to the dedicated researchers and working group members whose technical expertise and support were crucial to the success of this study. Their collective efforts have significantly contributed to the research outcomes, and this acknowledgment serves as a testament to their esteemed collaboration.

References

1. V.S. Arunachalam, E.L. Fleischer, The global energy landscape and materials innovation, MRS Bull. 33. 264–288. (2008)
2. Kusumastanto, Tridoyo. Analisis Kebijakan Energi Nasional. Bogor: IPB Press. (2014)
3. J.B. Goodenough, Electrochemical energy storage in a sustainable modern society, Energy Environ. Sci. 7 14–18. (2014)
4. Z. Yang, J. Zhang, M.C.W. Kintner-Meyer, X. Lu, D. Choi, J.P. Lemmon, J. Liu, Electrochemical energy storage for green grid, Chem. Rev. 111 3577–3613. (2011)
5. X. Fan, X. Liu, W. Hu, C. Zhong, J. Lu, Advances in the development of power supplies for the Internet of Everything, InfoMat 1 130–139. (2019)
6. X. Fan, B. Liu, J. Liu, J. Ding, X. Han, Y. Deng, X. Lv, Y. Xie, B. Chen, W. Hu, C. Zhong, Battery technologies for grid-level large-scale electrical energy storage, Transactions of Tianjin University 26 92–103. (2020)
7. Dirjen Ketenagalistrikan (DJK). Electricity Statistics Book 2017. Jakarta: Ministry of Energy, Resources and Minerals (ESDM). (2017)
8. International Energy Agency (IEA).. World Energy Outlook 2016. Paris: OECD/IEA. (2016)
9. Postnikov, I., Stennikov, V. & Penkovskii, A. Integrated Energy Supply Schemes on Basis of Cogeneration Plants and Wind Power Plants. Energy Procedia 158 154-159https://doi.org/10.1016/j.egypro.2019.01.063. (2018)