Optimization of parameters and operating modes of the unit for preparing soil for planting rice in Burundi

Angelos Niyomuvunyi[1*], *Boris* Tarasenko[1], *Viktor* Drobot[1], *Abdul-Mudalif* Dzjasheev[2], *Venera* Yumagulova[3], *Ekaterina* Miroshikhina[3], and *Vladimir* Zyryanov[3]

[1]Kuban State Agrarian University named after I.T. Trubilin, 350004 Krasnodar, Russia
[2]North-Caucasian State Academy, 369000 Karachay-Cherkess Republic, Cherkessk, Russia
[3]Kazan Federal University, 420008 Kazan, Russia

Abstract. In Burundi, according to ISTEEBU projections, the area of arable land per household could be around 0.3-0.5 ha over 20-25 years. In modern conditions, the use of large tractors is possible only on the Imbo plain and in the Kumoso basins in the east of the country. At the same time, the practice of polyculture does not contribute to the mechanization of agriculture. Under these conditions, the use of walk-behind tractors will facilitate the work, since instead of machines with passive plow and disk working bodies, it is more rational to use machines with active, rotary working bodies, such as tillage cutters, which are characterized by high quality loosening of the arable layer and soil mixing with fertilizers. However, when working with a walk-behind tractor, the operator is subject to high physical stress and vibration, which affects his health. There is also no fertilization operation.

1 Introduction

In Africa in general and in Burundi [1] in particular, tillage methods have not yet been developed. Most farmers use a traditional tool, the hoe, which is considered inefficient. It is in this situation that it takes a long time to complete tillage operations.

At present, most African countries are starting to invest in the agricultural sector from a scientific point of view to reverse this trend by taking the lead in using the most efficient implements for tillage, which will lead to increased production.

The object of research is the technological process, methods (methods, modes of operation) of the main tillage in the production of rice [2].

Improving the technology and technical means of basic tillage in the cultivation of rice in the Republic of Burundi is very relevant at the present time, since the entire rural population of the republic is engaged in the cultivation of crops, while rice is the main food product. In its production, primitive production technologies based on the manual labor of peasants are used. The use of modern mechanized technologies would make it possible to release a significant part of the population, which could be engaged in cattle breeding, would work at

* Corresponding author: angemuvunyi@gmail.com

industrial enterprises. The introduction of motor cultivators of medium and high power and tools for them will significantly accelerate this transition from manual to mechanized labor.

That is why, in the course of our study, we proposed an innovative tool developed by us in the form of an aggregate for soil preparation for planting rice in Burundi (Patent of the Russian Federation No. 215678).

The purpose of the study: to optimize the parameters and operating modes of the unit for soil preparation for planting rice in Burundi.

To achieve the goal, the following research tasks are proposed.

1. Develop a program and methodology for experimental research.
2. Carry out experimental studies.

2 Materials and methods

The program and methodology of experimental studies include the study of indicators during operation (tests) and measurements taken during the experiment. It includes:

- production of a prototype cutter with L-shaped knives, equipped with flat wedge-shaped teeth (Figure 1);
- development of an experimental setup (Figure 2).

3 Results and discussion

In our case, the "Soil preparation unit for planting rice in Burundi" (Patent of the Russian Federation No. 215678) is equipped with additional mechanisms and devices [3].

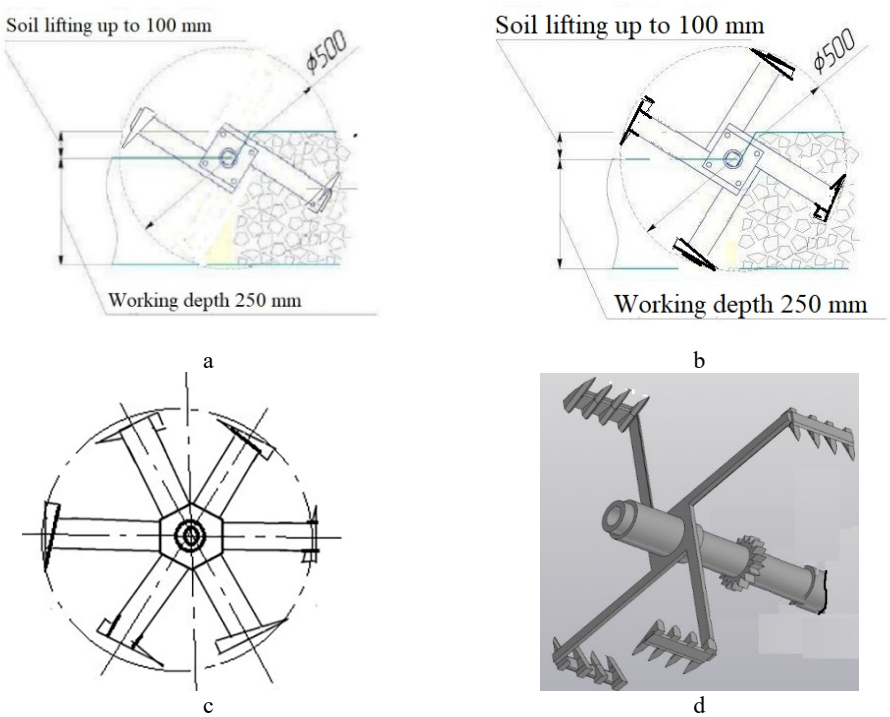

a - cutter with 2 knives; b - cutter with 4 knives; c - cutter with 6 knives; d - serrated knife with 4 knives

Fig. 1. Scheme of a tillage cutter with L-shaped knives equipped with wedge-shaped teeth.

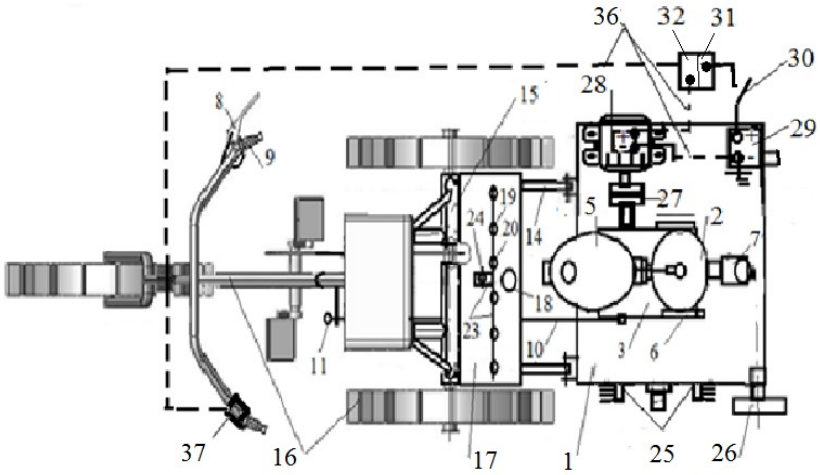

a

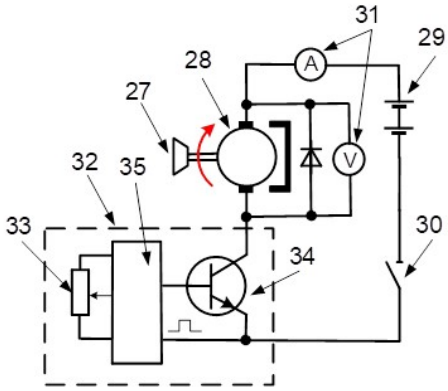

b

Fig. 2. Scheme of the experimental setup (top view), a; electric circuit, b.

As an add-on, a connecting device 27 with the secondary shaft of the motor-block gear box, a DC gear motor 28 (RTD) with permanent magnets, for example, DC110ZYT type with a supply voltage of 24 Volts, a battery 29, a mass switch 30, a recorder of electrical indicators 31, for example type HIOKI MR8870-20 - a digital recorder (2 channels), a control unit 32 consisting of a speed controller in the form of a potentiometer 33 of a power transistor 34 with a PWM controller 35 based on a microcircuit, for example KR1006VI1, wiring 36, speed control knob of the experimental setup 37.

Pre-lever 11 include a neutral gear box 3 with lowered transport wheels. After that, the mass switch 30 is turned on. The speed control knob for the experimental setup 33 sets different speeds from zero to maximum. In this case, the registrar 31 records the electrical parameters of the internal combustion engine. These will be the idle losses of the experimental setup.

At the end of the experiment, the recorded electrical indicators are taken and, using known formulas, determine

$$\sum M_{load} = k \cdot \Phi \cdot I_{load} \tag{1}$$

where $\sum M_{load}$ is the total moment of movement during tillage;

$k = pN/(2\pi a)$ is a design coefficient depending on the design parameters of the machine; N is the number of active conductors of the armature winding; p is the number of pairs of poles; α is the number of parallel branches of the armature winding; ω is the angular velocity, s^{-1}; Φ - magnetic flux, Wb;
I_{load} is the total DCT current during movement and tillage.

Traction resistance during processing is determined

$$M_{traction} = \sum M_{load} - M_{xx}. \quad (2)$$

where M_{xx} is the moment of idling losses of the experimental setup.

$$M_{xx} = k \cdot \Phi \cdot I_{xx} \quad (3)$$

Processing power

$$P_{traction} = M_{traction} \cdot \omega. \quad (4)$$

Processing of experimental data was carried out according to the method based on the provisions of the theory of experiment planning [4].

The estimation of measurement errors in the experiments was carried out according to a technique based on the provisions of the theory of errors.

According to the results of experimental studies, the following indicators are presented:

- Plans for conducting experiments and levels of variation, where the following indicators were chosen as variable factors: forward speed of the cutter V, km/h; angle of inclination of the knife with wedges α, degrees; number of knives z, pcs.
- Optimization of the parameters of the process of the main tillage with a cutter with L-shaped knives equipped with wedge-shaped teeth, a symmetrical composition plan B_k was chosen for setting up a three-factor experiment [5, 6, 7, 8].

The factors, intervals and levels of variation of the experiment are shown in Table 1. In each experiment, the specific traction resistance was measured at a depth of 10-12 cm. The measurements were carried out along the length of the unit in 3 replications, and the average value was recorded in Table 2 [9, 10].

Table 1. Factors, intervals and levels of variation.

Factors	**Coded designation**	**Variation interval**	**Factor levels**		
			-1	**0**	**+1**
Forward speed of the cutter V, km/h	x_1	2	3	5	7
Angle of inclination of the knife with wedges α, deg.	x_2	5	80	85	90
Number of knives z, pcs.	x_3	2	2	4	6

Table 2. Experiment Design Matrix.

Encoded value of variables			Natural value of variables			Specific traction resistance to soil loosening in rice fields, P, N
x_1	x_2	x_3	Forward speed of the cutter V, km/h	Knife tilt angle α, deg.	Number of knives z, pcs.	
+1	+1	+1	7	90	6	164
-1	+1	+1	3	90	6	139
+1	-1	+1	7	80	6	161
-1	-1	+1	3	80	6	131
+1	+1	-1	7	90	2	168
-1	+1	-1	3	90	2	147
+1	-1	-1	7	80	2	162
-1	-1	-1	3	80	2	137
+1	0	0	7	85	4	151
-1	0	0	3	85	4	126
0	+1	0	5	90	4	161
0	-1	0	5	80	4	154
0	0	+1	5	85	6	157
0	0	-1	5	85	2	162

For the response function, a second order regression equation was used. After processing the obtained data, we obtained the following equation with imaginary coefficients:

$$Y = 152.187 + 12.600x_1 + 3.400x_2 + 2.400x_3 - 1.125x_1x_2 + 1.125x_1x_3 - 0.625x_2x_3 - 13.687x_1^2 + \\ +5.312x_2^2 + 7.312x_3^2 , \quad (5)$$

where y is the specific traction resistance P, N; x_1 – translational speed of the cutter; x_2 – angle of inclination of the knife; x_3 – the number of knives.

All coefficients of this equation were tested for significance by the Cochran criterion, and the resulting model by the Fisher criterion.

Formulas for converting real values of factors into imaginary ones are carried out according to the data in Table 1 and the formulas given below:

$$x_1 = \frac{X_1 - 5}{2}; x_2 = \frac{X_2 - 85}{5}; x_3 = \frac{X_3 - 4}{2} .$$

The resulting equation was checked for adequacy according to the Fisher criterion, having previously done 5 experiments in the center of the plan in order to determine the variance of the experience.

Differentiating Equation 5 with respect to each of the variables, we equated the derivatives to zero and obtained a system of linear equations.

$$\begin{cases} \frac{dy}{dx_1} = +12.600 - 27.374x_1 - 1.125x_2 + 1.125x_3 \\ \frac{dy}{dx_2} = 3.420 - 1.125x_1 + 10.624x_2 - 0.625x_3 \\ \frac{dy}{dx_3} = 2.400 + 1.125x_1 - 0.625x_2 + 14.624x_3 \end{cases} \quad (6)$$

Having solved the system of linear equations, we found the coordinates of the center of the response surface: $x_1 = 0.476$; $x_2 = -0.263$; $x_3 = 0.116$.

Substituting the values x_1, x_2, x_3 into the original regression equation (5), we found the values of the optimization parameter in the center of the response surface.

The value of the response at the new origin (free term of the canonical equation) Y_s = 154.599, N.

Performed a canonical transformation. To do this, equation (5) was transferred to a new coordinate system and the coordinate axes were rotated by the rotation angle α = 8.647° from the initial coordinate axes of the response surface to coincide with the main axes of the figure.

After transformations, equation (5) in the canonical form has the following form:

$$Y - 154.599 = -13.687X_1^2 + 5.265X_2^2 + 7.360X_3^2 \quad (7)$$

For further study of the response surfaces (5), its two-dimensional sections were performed in order to determine the influence of two factors on the response near the optimum, when the value of the third factor is optimal.

Initially, we considered the section of the response surface by the X_1SX_2 plane. For this, $x_3 = +0.116$ was substituted into equation (5) and we got:

$$Y_{12} = 152.564 + 12.731x_1 + 3.328x_2 - 1.125x_1x_2 - 13.687x_1^2 + 5.312x_2^2 , \quad (8)$$

where Y_{12} is the specific traction resistance P at the interaction of the 1st and 2nd factors, when the 3rd factor is in the center of the experiment plan.

After performing the canonical transformation and solving the system of linear equations, we found the coordinates of the center of the response surface: $x_1 = 0.476$, $x_2 = -0.263$.

Substituting the found values x_1, x_2 into equation (8), we determined the value of the optimization parameter in the center of the response surface, at $x_3 = 0.116$ and soil resistivity $Y_s = 154.599$

The angle of rotation α of the coordinate axes was determined. It is equal to 1.694 degrees, and the coefficients for the unknowns in the canonical form are equal: for $X_1^2 = -13.704$; with $X_2^2 = 5.329$. We have obtained the equation of the response surface in canonical form:

$$Y - 154.599 = -13.704X_1^2 + 5.329X_2^2 , \quad (9)$$

The resulting response surface is a hyperboloid of revolution (Figure 3, a). Given the values of the response Y and substituting them into the canonical equations (9), we obtained a family of conjugate isolines in the form of an image (Figure 3, b). The isolines obtained as a result of the section of the response surface have the form of a mini-max.

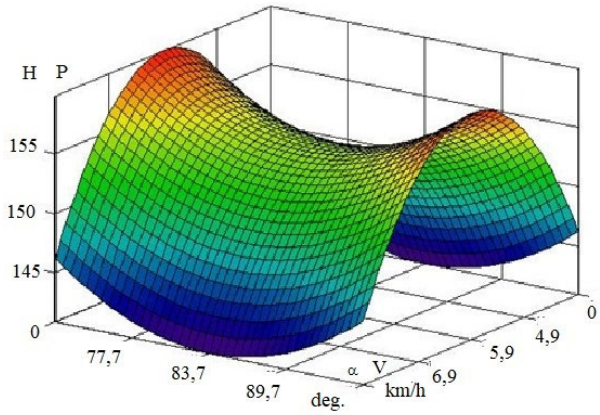

a

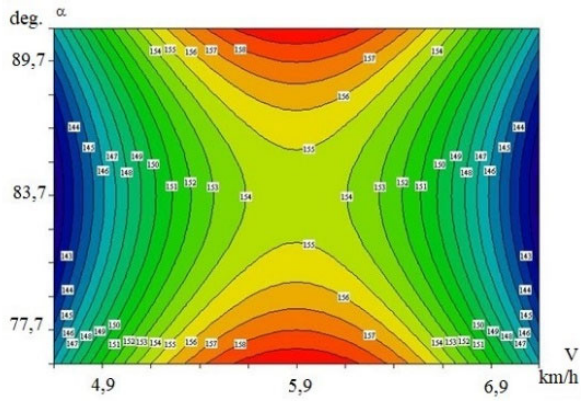

b

Fig. 3. The response surface for the dependence of the specific traction resistance of the soil on the forward speed of the cutter and the angle of the knife (a). Two-dimensional section of the response surface for the dependence of soil resistivity on the forward speed of the cutter and the angle of inclination of the knife (b).

We considered the section of the response surface by the X_1SX_3 plane. For this, x_2 = -0.263 was substituted into the regression equation (5). The regression equation took the form:

$$Y_{13} = 151.660 + 12.887x_1 + 2.565x_3 + 1.125x_1x_3 - 13.687x_1^2 + 7.312x_3^2 \quad (10)$$

Having performed canonical transformations and solving a system of linear equations, we obtained the response surface equation in canonical form:

$$Y_{13} - 154.399 = -13.703X_1^2 + 7.328X_3^2 \quad (11)$$

The response surface has the shape of a hyperboloid of revolution (Figure 4, a), and the sections of the response surface in the experimental area give isolines in the form shown in Figure 4, b.

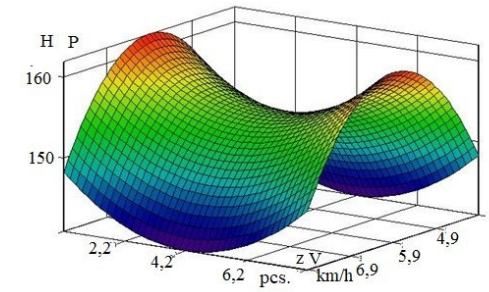

a

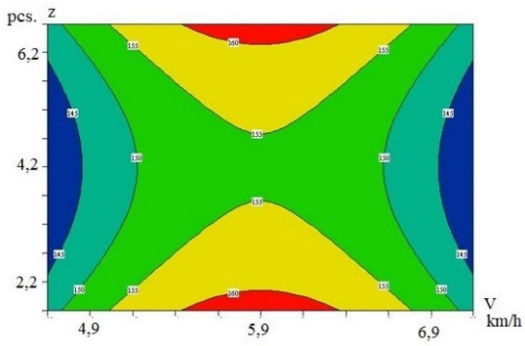

b

Fig. 4. Response surface for the dependence of soil resistivity on the forward speed of the cutter and the number of knives (a). Two-dimensional section of the response surface for soil resistivity on the forward speed of the cutter and the number of knives (b).

We considered the section of the response surface by the X_2SX_3 plane. For this, $x_1 = 0.476$ was substituted into the regression equation (5), obtaining it in the canonical form:

$$Y_{23} = 155.083 + 2.865x_2 + 2.936x_3 - 0.625x_2x_3 + 5.312x_2^2 + 7.312x_3^2 \quad (12)$$

Having performed canonical transformations and solving a system of linear equations, we obtained the response surface equation in canonical form, which has the form:

$$Y_{23} - 154.599 = 5.265X_2^2 + 7.360X_3^2 \quad (13)$$

The response surface is a paraboloid of revolution (Figure 5, a), and the isolines of the response surface sections in the experimental area have the shape of ellipses (Figure 5, b), which are elongated along the axis corresponding to the angle of inclination of the knives.

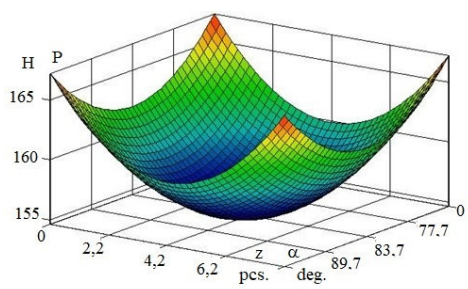

a

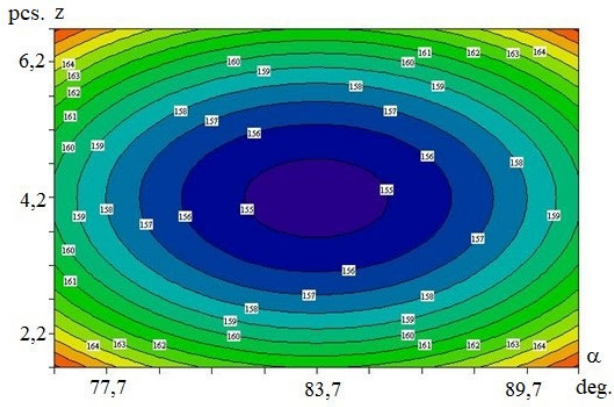

b

Fig. 5. The response surface of the dependence of soil resistivity on the number of knives and the angle of inclination of the knives (a). Two-dimensional section of the response surface for the dependence of soil resistivity on the number of knives and their angle of inclination (b).

All calculations related to the construction of response surfaces and graphs were carried out using electronic Windows applications: Microsoft Excel, etc. [11].

Figure 6 shows graphs 1 and 2 that characterize the dependence of traction resistance on the translational speed of the cutter (V, km/h) with L-shaped knives equipped with wedge-shaped teeth, obtained on the basis of experimental data and obtained on the basis of theoretical calculations, respectively, carried out verification of convergence by the Cochran criterion [12].

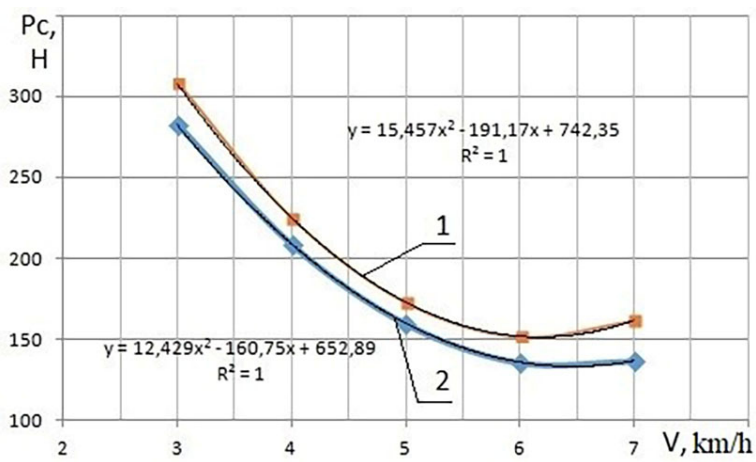

Fig. 6. Graphs 1 and 2 characterizing the dependence of traction resistance on the translational speed of the cutter (V, km/h) with L-shaped knives equipped with wedge-shaped teeth, based on experimental data and theoretical calculations, respectively.

4 Conclusion

The tasks set to ensure the purpose of the research have been completed.

A constructive-technological scheme for tillage with the use of motor-block technology with the use of L-shaped knives equipped with wedge-shaped teeth has been developed.

A setup for conducting experiments and working bodies in the form of L-shaped knives equipped with wedge-shaped teeth have been developed.

Using the method of planning a three-factor experiment according to plan B_k, we experimentally determined the optimal parameters of soil resistivity, provided that agro-requirements are met.

References

1. O.V. Konstantinova, Bulletin of the University **4**, 70-76 (2016)
2. B.F. Tarasenko, A. Niyomuvuni, Michurinsky Agronomic Bulletin **4**, 72-76 (2022)
3. S.V. Melnikov, *Planning an experiment in the study of agricultural processes, ed. 2nd revision and additional* ("Kolos", Moscow, 1982), p. 171
4. V.V. Tsybulevskiy, B.F. Tarasenko, S.V. Oskin, IOP Conf. Ser.: Earth Environ. Sci. **666**, 032090 (2021)
5. B. Tarasenko, S. Oskin, Engineering for Rural Development. Proceedings (2009, 2014)
6. B.F. Tarasenko, V.A. Drobot, V.V. Tsybulevsky, S.G. Rudnev, Sel'skii mekhanizator **3**, 4-5 (2019)
7. Valery Tsybulevsky, Boris Tarasenko, Irina Troyanovskaya, Sergey Voinash, Ramil Zagidullin, Ilgam Kiyamov, Linar Sabitov, E3S Web of Conferences **390**, 06002 (2023)
8. V.A. Drobot, Polythematic network electronic scientific journal of the Kuban State Agrarian University **91**, 702-711 (2013)
9. V.A. Drobot, B.F. Tarasenko, Polythematic network electronic scientific journal of the Kuban State Agrarian University **91**, 712-720 (2013)
10. V.A. Drobot, A.S. Brusentsov, *Agroreclamation techniques for surface tillage*, in Collection of abstracts based on the materials of the All-Russian Scientific and Practical Conference, Krasnodar, 252 (2021)
11. I.A. Petunina, S.G. Rudnev, *Sustainability of the movement of the plow*, in Theory and practice of modern agrarian science. Collection of the III national (all-Russian) scientific conference with international participation. Volume 2. Novosibirsk State Agrarian University. Publisher: ITs NSAU "Golden Ear", 80-83 (2020)
12. R. Dobretsov, I. Troyanovskaya, S. Voinash, R. Zagidullin, L. Sabitov, A. Nurullin, FME Transactions **51**, 415-422 (2023)