Designing a Precision Seed Sowing Machine for Enhanced Crop Productivity

M Sudha Paulin[1*], Rajesh Pant [2], S.Sathiya Naveena [3], Myasar Mundher adnan, [4] , Saurabh Aggarwal[5] & R Kandavel[6]

[1] Assistant Professor ,Business and Management-Kengeri campus
Christ (Deemed to be University)Bangalore
[2]Uttaranchal Institute of Management ,Uttaranchal University
Uttarakhand, India . rajeshpant.mech@gmail.com
[3]Assistant Professor, Department of MBA, Prince Shri Venkateshwara Padmavathy Engineering College, Chennai - 600 127, sathyanaveena_mba@psvpec.in
[4] The Islamic university, Najaf, Iraq. Maiser.monther@iunajaf.edu.iq
[5]Uttaranchal Institute of Technology, Uttaranchal University, Dehradun-248007, India
[6]Associate Professor,School of Management, Jeppiaar University,
Chennai, Tamilnadu.

Abstract :A seed sowing machine is a valuable agricultural device that facilitates the precise and efficient sowing of seeds in fields. When designing and optimizing such a machine, several crucial factors need consideration including seed size, seed rate, soil type, and field conditions. The primary objective is to achieve uniform seed distribution and optimal seed-to-soil contact, which can be accomplished by incorporating a seed metering mechanism to control the seed rate accurately. Versatility is another important aspect of the machine's design, as it should be able to handle different seed sizes, types, soil conditions, and field variations. To achieve this, utilizing advanced technologies such as sensors, automation, and precision farming techniques can significantly enhance the machine's performance and efficiency while also reducing costs and minimizing environmental impact. The optimization of a seed sowing machine plays a crucial role in ensuring successful crop production. By implementing cutting-edge technologies and precision farming techniques, farmers can increase their yields and decrease the amount of seed and fertilizer needed for a specific area. Ultimately, this leads to improved productivity, increased profitability, and a more sustainable approach to agriculture.
Keywords: Seed machine, design ,CATIA and analysis

1. Introduction

Agriculture holds a crucial position as one of the oldest and most vital industries globally, providing essential sustenance and resources to billions of people. The success of

*Corresponding Authour : sudha.paulin@christuniversity.in

agriculture hinges on several factors, including seed quality, soil conditions, water availability, and other resources. Among the critical stages in crop production, seed sowing significantly influences both crop yield and quality. The conventional manual method of seed sowing is time-consuming, labor-intensive, and often results in uneven seed distribution. To address these challenges, the development of seed sowing machines has revolutionized the sowing process. Seed sowing machines are purpose-built devices designed to facilitate the efficient sowing of seeds in agricultural fields. These machines come in both manual and tractor-mounted variants and possess the ability to handle a wide range of seed sizes and types. The primary goal of these machines is to achieve uniform seed distribution and ensure optimal seed-to-soil contact, as this factor is critical for successful crop production. The design of a seed sowing machine requires meticulous consideration of various factors, including seed size, seed rate, soil type, and field conditions. It should be versatile enough to adapt to different seed sizes and types, as well as varying soil and field conditions. Furthermore, incorporating a seed metering mechanism to regulate the seed rate and ensure accurate seed sowing is vital. Optimizing the design and operation of seed sowing machines plays a pivotal role in enhancing their overall performance and efficiency, while simultaneously reducing costs and mitigating environmental impact [1]. The successful achievement of this objective can be facilitated through the integration of advanced technologies, including sensors [2], automation [3,4], and precision farming techniques. For instance, employing sensors to monitor soil moisture and temperature enables the adjustment of the seed rate, leading to optimized seed-to-soil contact and improved crop yields. In this context, this paper aims to thoroughly explore the design and optimization of seed sowing machines. It will delve into various essential factors that must be considered during the design phase, such as seed size, seed rate, soil type, and field conditions. Additionally, the paper will investigate the optimization of seed sowing machines, with a specific focus on the integration of advanced technologies and precision farming techniques. Furthermore, the paper will discuss the potential future advancements of seed sowing machines, highlighting opportunities for development and their potential integration with other precision farming technologies. The Babylonians used primitive single-tube seed drills around 1500 BCE, although this invention did not spread to Europe. The Chinese, on the other hand, developed multi-tube iron seed drills in the 2nd century BCE. This innovative technology played a crucial role in establishing an efficient food production system in China, supporting its large population for many centuries. There are indications that this multi-tube seed drill might have influenced European agriculture through contacts with China.. Subsequently, Jethro Tull further refined the seed drill in 1701 during the Agricultural Revolution in England. However, these early seed drills and their subsequent versions were expensive, unreliable, and delicate. It wasn't until the mid-19th century that seed drills became widely adopted in Europe. Initially, these drills were small enough to be pulled by a single horse, and some remained in use until the 1930s. With the advent of steam and later gasoline tractors, larger and more efficient drills were developed, enabling farmers to sow vast areas in a single day. Recent advancements in seed drills have allowed for direct seed drilling without prior tilling. This practice protects soils from erosion or moisture loss until the seeds germinate and grow sufficiently to anchor the soil. Consequently, this method helps prevent soil loss by avoiding erosion after tilling. One significant pre-1900 farming technology innovation was the press drill. For small-scale cropping, the ideal cropping machines should be suitable for small farms, [5]designed with simplicity and versatility to perform various farm operations. manually operated template row planter was designed and developed . Seed planting can be achieved for different seed

sizes, depths, and spacing between seeds. This advancement has resulted in improved seed planting accuracy and precise seed/fertilizer placement. Moreover, the seed planter is constructed using durable and cost-effective materials, making it affordable for small-scale peasant farmers. The machine's operation, adjustment, and maintenance principles are kept simple to enable easy handling by unskilled operators (farmers). In contrast, the manual method of seed planting often leads to inefficient seed placement and spacing, as well as causing backaches for the farmers, limiting the size of fields that can be planted.

To ensure optimal performance from a seed planter, it is essential to address these limitations through proper design and careful selection of components tailored to suit the specific needs of different crops.In the past, various types of seed planter designs have been developed, including hand-pushed and tractor-mounted row seeders.These machines usually require a well-prepared seed-bed, which can be either ridged or flat. However, each design approach comes with its own set of advantages, disadvantages, and operational limitations. However, it was unsuitable for use on ridged seed beds and required considerable effort and time to adjust the seed drill size and spacing. The transplanter had a field capacity of 0.19 ha/h and demonstrated 20% field efficiency. These previous designs showed promising results in their respective applications., P. Vijay [6] designed a Multi-Purpose Seed Sower cum Plougher to address the challenges faced by farmers during sowing. They identified that existing sowing machines were expensive and had high rental costs. To provide a cost-effective solution, they aimed to create a device with multiple functions, including levelling, sowing, and ploughing. However, they also observed that the device's heavy weight could affect soil porosity.

2. Design of seed-sowing machine

Creating a seed sowing machine with CATIA V5 entails several essential stages, encompassing concept development, 3D modeling, and simulation. Here is a general outline of the design process.The initial phase of designing a seed sowing machine involves conceptualizing a design that aligns with the user's specific requirements [7-10]. This step entails identifying crucial factors such as the types of crops to be sown, desired planting density, field conditions, and any other elements that could impact the machine's design.

3D Modelling

After the concept has been formulated, the subsequent stage is to generate a 3D model of the seed sowing machine using CATIA V5. This phase entails utilizing diverse tools and features within the software to design individual components and assemble them to form the complete machine. The 3D model should encompass essential details, including the seed hopper, seed metering mechanism, seed distribution system, and any other components necessary for the machine's efficient operation.

Simulation

Once the 3D model of the seed sowing machine is complete, the subsequent stage is to perform a simulation of the machine's operation to verify its intended functionality[11,12]]. This process utilizes specialized software tools to simulate the motion of the machine and the behavior of the seeds during the sowing process. By conducting this simulation, potential design issues or areas for improvement can be identified and addressed before the actual construction of the machine takes place.

Analysis

To ensure that the design of the seed sowing machine meets safety, performance, and other essential requirements, it may be necessary to conduct thorough analyses. These analyses

can involve various engineering assessments, such as stress analysis, vibration analysis, and other relevant evaluations [13,14]. By performing these analyses, potential weaknesses or areas of concern can be identified and addressed, ensuring that the final design meets the necessary standards for safe and efficient operation.

Finalization

After optimizing and analyzing the design, the last stage is to finalize the 3D model and make it ready for manufacturing. This involves creating detailed drawings and specifications for each component and assembling them into a comprehensive set of plans for the machine.

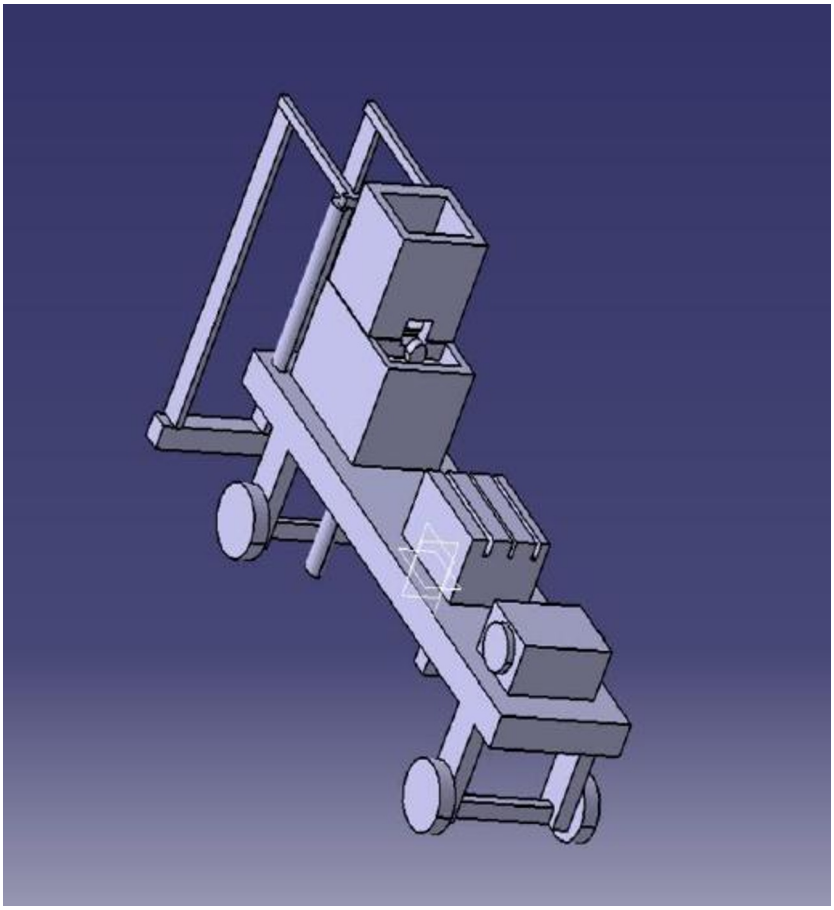

Figure 1 ***Design of seed-sowing machine***

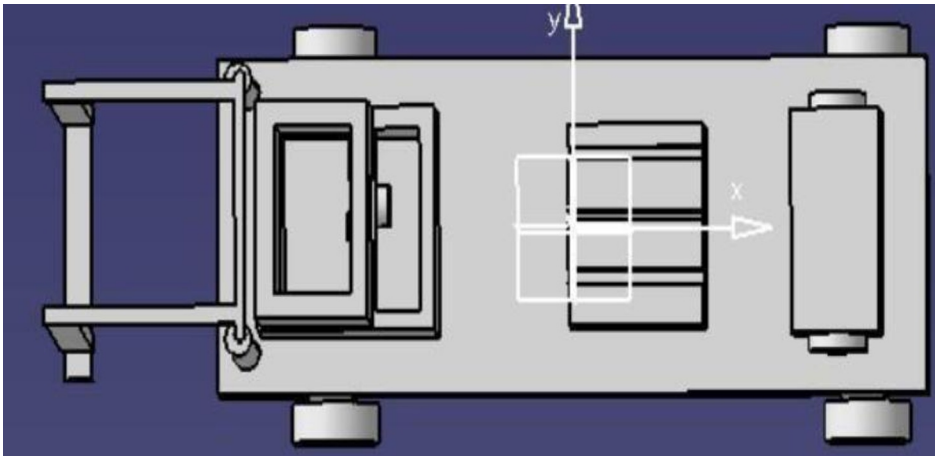

Figure 2 Top view of seed-sowing machine

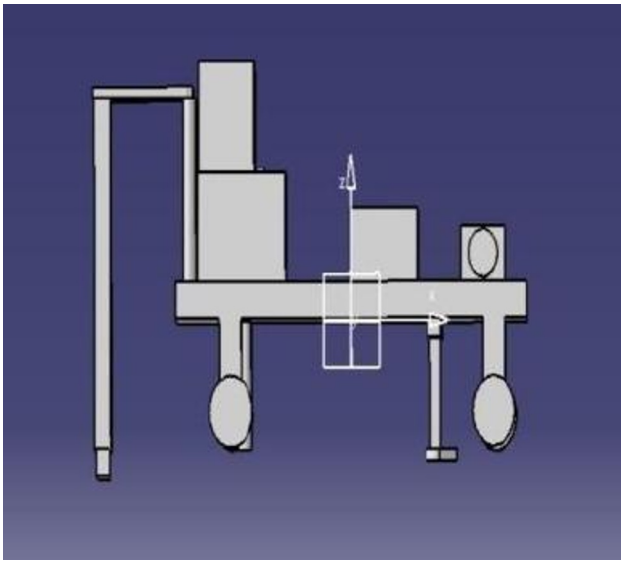

Figure 3 side view of seed sowing machine

3. Optimization of seed sowing machine

The optimization of a seed sowing machine revolves around enhancing its performance and efficiency through design or operational modifications. Improvements can be achieved by identifying areas for enhancement, such as reducing seed waste, enhancing seed placement accuracy, and increasing planting speed. Precision agriculture technology, such as GPS or sensors, can be employed to enhance seed placement accuracy. By incorporating these

tools, the machine can ensure that seeds are planted at the appropriate depth and spacing, resulting in improved crop yield and reduced seed waste. Another aspect of optimization involves improving the seed metering mechanism, which regulates the seed flow from the hopper to the distribution system. By optimizing this mechanism, a consistent flow of seeds can be maintained, leading to enhanced seed placement accuracy and reduced seed waste. The design of the distribution system also plays a crucial role in optimization. Implementing multiple outlets or adjustable nozzles can ensure even seed distribution across the field, reducing the need for additional passes and improving overall efficiency. Furthermore, optimizing the power source is vital. Replacing a diesel engine with an electric motor [15], for example, can improve the machine's efficiency and minimize its environmental impact. the optimization of a seed sowing machine involves identifying areas for improvement and implementing changes in design or operation to enhance performance and efficiency. Utilizing precision agriculture technology, improving the seed metering mechanism, optimizing the distribution system [16,17], and employing efficient power sources can contribute to the creation of a highly effective and efficient seed sowing machine for agricultural use.

4. working of seed-sowing machine

The seed sowing process begins with filling the seed hopper with the desired quantity of seeds, either manually or using a separate seed filling machine. Afterward, start the machine and activate the remote-control system[18,19], ensuring proper synchronization between the remote-control device and the machine's control system. Next, utilize the depth control mechanism to set the sowing depth according to the specific seed type and prevailing soil conditions. This can be achieved through adjustment using a lever or hydraulic control system.To ensure even seed distribution across the field[20,21], the seed distribution system should be appropriately adjusted. This adjustment can involve using a fan or air pressure system to regulate the seed dispersal process. By fine-tuning the distribution system, uniform seed placement can be achieved, enhancing the efficiency of the sowing process.To begin sowing, maneuver the machine across the field, following the desired path using the remote-control device. Engage the machine's drive system to provide power and facilitate forward movement. As the machine advances, the seed metering mechanism releases the seeds from the hopper into the seed tube. The seed tube delivers the seeds to the coulter or opener, which creates a furrow in the soil and sows the seeds at the desired depth.

Figure 4 Assembly model of seed sowing machine

Continue sowing the seeds across the field until the hopper is empty or the intended area has been covered. Utilize the remote-control system to adjust the machine's speed, turn radius, and other settings, ensuring even and efficient seed sowing.Upon completing the sowing process, stop the machine's engine or motor and disengage the remote-control system. Conduct an inspection of the machine for any potential issues or maintenance requirements.The use of a remote-control system grants the operator precise control over the machine's movements and functions, minimizing the risk of crop and machinery damage. Additionally, operating the machine from a safe distance enhances operator safety and reduces fatigue, thanks to the remote-control system's capabilities.

5. Conclusion

The incorporation of a seed metering mechanism, which effectively controls the seed rate and ensures precise seed sowing, is instrumental in achieving the desired objective of uniform and efficient seed distribution. The optimization of a seed sowing machine is of utmost importance as it leads to enhanced performance, increased efficiency, and reduced costs and environmental impact. By leveraging advanced technologies such as sensors, automation, and precision farming techniques, farmers can further improve the machine's capabilities and outcomes. The utilization of sensors to monitor soil moisture and temperature allows for accurate adjustments to the seed rate, optimizing seed-to-soil contact, and ultimately resulting in improved crop yields. Furthermore, the optimization of

the seed sowing machine offers the added advantage of minimizing the amount of seed and fertilizer required for a given area, aligning with the principles of sustainable agriculture. This responsible approach is essential in maximizing crop productivity while minimizing the environmental footprint of crop production.In conclusion, the design and optimization of a seed sowing machine play a pivotal role in achieving efficient and precise seed distribution, leading to improved crop yields and reduced environmental impact. The adoption of advanced technologies and precision farming techniques can significantly contribute to accomplishing these objectives, and farmers should give careful consideration to these factors when selecting and employing seed sowing machines on their farms.

References

1. J R Murray, J N Tullberg and B B Basnet, "Planters and their Components, (Types, attributes, functional requirements, classification and description)", School of Agronomy and Horticulture, University of Queensland, Australia.
2. Kyada, A. R., Patel D. B., "Design And Development Of Manually Operated Seed Planter Machine", (AIMTDR 2014) December 12th–14th, 2014, IIT Guwahati, Assam, India.
3. B. Mursec, P. Vindis, M. Janzekovic, F. Cus , M. Brus, (2008)"Testing of quality of sowing by pneumatic sowing machines", Journal of Achievements in Materials and Manufacturing Engineering, volume 26, issue 1January 2008.
4. Ronald J. Esdaile, Prof. Richard Bell, Mr Israil Hossain, Mr. Enamul Haque, Mr Pao Sinath and Mr Leigh Vial,(2009) "Development of conservation farming implements for two-wheel tractors (power tillers) in Cambodia", Lao PDR and Bangladesh Australian centre for international agricultural research, September 2009.
5. P. Vijay, K.V.N. Rakesh, B. Varun, (2013)"Design of a Multi-Purpose Seed Sower Cum Plougher", International Journal of Emerging Technology and Advanced Engineering, Volume 3, Issue 4, April 2013.
6. Book By Robert D Walters "Department of Soil Science", North Carolina State University, soil draft and traction.
7. Gugulothu, B., Bharadwaja, K., Vijayakumar, S., Rao, T. V. J., Sri, M. N. S., Anusha, P., & Agrawal, M. K. (2023). Modeling and parametric optimization of electrical discharge machining on casted composite using central composite design. International Journal on Interactive Design and Manufacturing (IJIDeM). https://doi.org/10.1007/s12008-023-01323-7
8. Anusha, P., Sri, M. N. S., Vijayakumar, S., Rao, T. V. J., Paramasivam, P., Jeyakrishnan, S., & Saxena, K. K. (2023). Design and optimization the wear characteristics for Al7178/TiO2/B4C/FA central hybrid composite. International Journal on Interactive Design and Manufacturing (IJIDeM). https://doi.org/10.1007/s12008-023-01341-5
9. Vijayakumar, S., Arunkumar, A., Pradeep, A., Satishkumar, P., Singh, B., Rama Raju, K. S., & Sharma, V. K. (2023). Optimization of process variables for shielded metal arc welding dissimilar mild steel and medium carbon steel joints. Journal of Adhesion Science and Technology, 1–18. https://doi.org/10.1080/01694243.2023.2227461
10. Sharma, P., Paramasivam, P., Bora, B. J., & Sivasundar, V. (2023). Application of nanomaterials for emission reduction from diesel engines powered with waste cooking oil biodiesel. International Journal of Low-Carbon Technologies, 18, 795–801. https://doi.org/10.1093/ijlct/ctad060.

11. Vijayakumar, S., Satheesh Kumar, P. S., Sampath kumar, P., Manickam, S., Ramaiah, G. B., & Pydi, H. P. (2022). The Effect of Stir-Squeeze Casting Process Parameters on Mechanical Property and Density of Aluminum Matrix Composite. In M. A. Khan (Ed.), Advances in Materials Science and Engineering (Vol. 2022, pp. 1–10). Hindawi Limited.
12. Pradeep, A., Kavitha, N., Janardhana Rao, T. V., & Vijayakumar, S. (2022). Influence of nano alumina/vegetable oil based cutting fluid on MQL turning of stainless steel 304. Materials Today: Proceedings. https://doi.org/10.1016/j.matpr.2022.06.547
13. Pal, D., Vijayakumar, S., Rao, T. V. J., & Babu, R. S. R. (2022). "An examination of the tensile strength, hardness and SEM analysis of Al 5456 alloy by addition of different percentage of SiC/flyash",Materials Today: Proceedings.
14. Paramasivam, P., & Vijayakumar, S. (2021). "Mechanical characterization of aluminium alloy 6063 using destructive and non-destructive testing", Materials Today: Proceedings.
15. MekonnenLibenNekere, Ajit Pal Singh, "Optimization of aluminium blanks sand casting for process by using Taguchi Robust Design Method", International Journal for Quality research Vol. 6, No. 1, **(2012)**, pp. 81- 97.
16. Guharaja, S, A, NoorulHaq , K, M, Karuppannan, 'Optimization of green sand casting process parameters by using Taguchi's method', International Journal of Advanced Manufacturing Technology, vol. 3, **(2006)**, 30: pp. 1040–1048.
17. Vijayakumar, S., Anitha, S., Arivazhagan, R., Hailu, A. D., Rao, T. V. J., & Pydi, H. P. (2022). Wear investigation of aluminum alloy surface layers fabricated through friction stir welding method. Advances in Materials Science and Engineering, 2022, 1–8.
18. Sheeba Rani S., Kamatchi Sundari V., Subha Hency Jose P., Sivaranjani S., Stalin B., Pritima D.,(2020),"Enrichment of material subtraction rate on Eglin steel using electrical discharge machining process through modification of electrical circuits",Materials Today: Proceedings,Vol.33,pp.4430
19. Dhaya R., Ujwal U.J., Sharma T., Singh P., Kanthavel R., Selvan S., Krah D.,(2022),"Energy-Efficient Resource Allocation and Migration in Private Cloud Data Centre",Wireless Communications and Mobile Computing,Vol.2022. doi:https://www.scopus.com/inward/record.uri?eid=2-s2.0-85126998057
20. Mr. Ather Parvez Abdul Khalil. (2012). Healthcare System through Wireless Body Area Networks (WBAN) using Telosb Motes. International Journal of New Practices in Management and Engineering, 1(02), 01 - 07. Retrieved from http://ijnpme.org/index.php/IJNPME/article/view/4
21. Ms. Ritika Dhabalia, Ms. Kritika Dhabalia. (2012). An Intelligent Auto-Tracking Vehicle. International Journal of New Practices in Management and Engineering, 1(02), 08 - 13. Retrieved from http://ijnpme.org/index.php/IJNPME/article/view/5