Development and research of an intelligent system for controlling the modes of power supply systems

Mussa Bashirov[1*], *Ilvina* Yusupova[1], *Mariya* Shvan[1], *Nargiz* Daminov[1], *Kirill* Kuznetsov[1], and *Timur* Sagitov[1]

[1]Ufa State Petroleum Technological University, 1, Kosmonavtov st., Ufa, 450064, Russia

Abstract. The development of active-adaptive electrical networks with an intelligent control system involves the creation of energy information complexes with the possibility of continuous monitoring and remote control of the operating modes of all its components in order to optimize network parameters. This necessitates the need to adapt educational programs and training technologies to train specialists with skills in related fields. The paper describes a developed research complex with elements of artificial intelligence for performing research and studying intelligent systems and means of controlling the modes of power supply systems based on a set of educational equipment using real and virtual objects of electric power systems with adjustable parameters. Pychram Community Edition was chosen as the integrated development environment. The software part of the complex has been developed, including a digital twin of the stand, an executive part and a neural network model. The neural network allows you to optimize the parameters of an active-adaptive electrical network to minimize technical losses during electricity transmission.

1 Introduction

The innovative organizational and technological platform (concept) of an intelligent energy system and the tools of this platform are being implemented in many developed countries. The result of the implementation of this concept, among other things, is the minimization of technical losses during electricity transmission. The task of reducing losses in the distribution of electricity is one of the main areas of research carried out by such large companies as Siemens, ABB and Shneider Electric. As part of these studies, this problem is solved by introducing solutions related to artificial intelligence technologies [1-2].

In connection with the modernization of energy systems around the world, the need for highly qualified specialists capable of operating intelligent systems and using artificial intelligence tools has arisen and is growing every day. All this requires a qualitatively different level of employee training and changes in approaches to training.

* Corresponding author: eapp@yandex.ru

The Institute of Oil Refining and Petrochemistry of the Federal State Budgetary Educational Institution of Higher Education Ufa State Petroleum Technical University (branch of USPTU in Salavat) has begun training masters in the program “Intelligent means and systems for control, protection and diagnostics of electric power complexes”, training direction 04/13/02 “Electrical power engineering and electrical engineering”. Training is carried out in a project format, which implements advanced training of specialists for intelligent electric power complexes. It is worth noting that in foreign technical universities, the training of specialists in a similar master's program began only slightly ahead of time, on the initiative of the world's leading companies specializing in the electricity sector.

The implementation of the master's program involves performing laboratory work using laboratory installations with elements of artificial intelligence, including the special discipline “Intelligent means of controlling the modes of power supply systems.” During the analysis of the market for domestic laboratory installations, no suitable educational complex with elements of artificial intelligence was found for conducting laboratory work in this discipline. Therefore, it was decided to create an educational and research complex based on a set of educational equipment “Active-adaptive electrical networks”, supplementing it with real and virtual objects, control tools, a digital twin and an intelligent control system based on an artificial neural network.

Before the start of the project, an analysis of publications in the field of research and development of intelligent electric power complexes and in the field of development of educational installations for study and research in the field of intelligent tools and control systems for the modes of electric power complexes was carried out.

Control of operating modes of power supply systems using artificial intelligence is discussed in works [3-6]. Feng, Q., Zhang, J., Zhang, W., and Hodge, B.M. used neural networks to predict solar activity to control autonomous electrical networks [7].

Manobanda A., Patricia O. and Granda N. in [8] presented a methodology for forecasting electricity demand in an oil production company in Ecuador. The model was written in Python. In the final part, the authors compared the developed algorithm with the methods used in industry for predicting consumption; the result demonstrated sufficient accuracy indicators.

Talaat M., Elkholy M., Alblawi A. and Said T. write about the positive effect of using artificial intelligence in the integration of renewable energy sources in their work [9].

Bagdasaryan M., Oganesyan V., Akopyan T. in [10] compare the use of various artificial neural networks for controlling dynamic electric drive systems with PID controllers. As a result of the work, it was concluded that the joint use of genetic algorithms and artificial neural networks provides better accuracy indicators compared to other neural network models and reduces training time, but it is also noted that in a number of problems it makes sense to choose a different algorithm. Therefore, it is important to analyze and compare metrics obtained from different approaches.

Virtual reality systems are being introduced into the training system in order to obtain skills in servicing electrical power systems. The works of foreign authors show the development and implementation of a learning environment based on virtual reality for servicing high-voltage energized overhead lines in distribution networks [11] and for designing networked photovoltaic power plants [12]. A virtual reality substation is shown in [13]. Works [14-15] show the use of digital twins in the power system. A digital twin of the educational stand developed and implemented in the educational process is presented in [16]. A software package using artificial intelligence methods for automated design of digital substations has been developed on the basis of the National Research University (NRU) MPEI [17].

Literary analysis at the start of the project showed the lack of solutions for creating educational and research complexes containing physical installations and their digital twins

with intelligent means of controlling operating modes, which could be used in the implementation of the master's program "Intelligent means and systems for control, protection and diagnostics of electric power complexes" training area 04/13/02 "Electrical power engineering and electrical engineering".

2 Materials and methods

During the implementation of the project, the technical and methodological documentation of the laboratory stands “Model of an electrical system with a complex load unit”, “Automation of electrical power systems”, a virtual simulator, a set of virtual laboratory works on active-adaptive electrical networks of LabSys LLC and GalSen LLC were studied. Also, the basis for the creation of the complex was the technical documentation and experience in the development of educational laboratory stands on the basis of the hardware and software software "OVEN", JSC "Ekoresurs" [16], an intelligent system for diagnosing machine units with electric drive.

On the basis of a set of equipment in the educational laboratory of the department, the task was set to model a section of the power system, which is a branch of a radial distribution network in which electricity passes from the 6 kV bus of the source substation to a separate electrical receiver in the form of an active-inductive load. In this case, a one-time voltage drop occurs at the 6/0.4 kV transformer substation. To achieve the set goals, modules of the laboratory benches “Model of an electrical system with a complex load unit” (MES-KN-SK) of LabSys LLC and “Automation of electric power systems” (AES-SK) of LabSys LLC were selected (Figure 1).

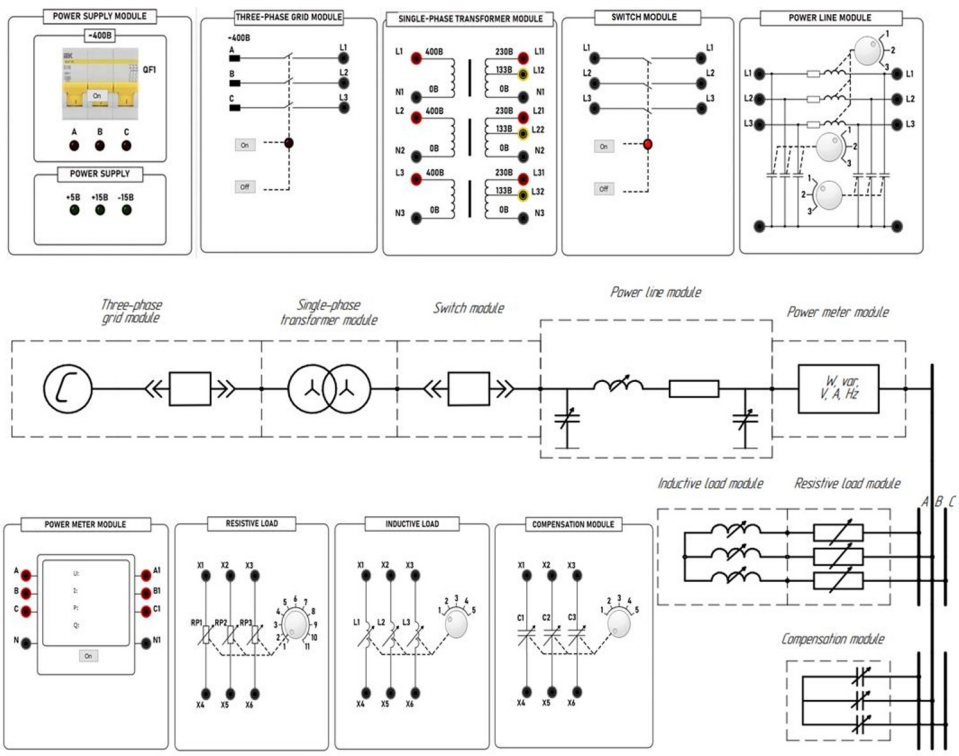

Fig. 1. Involved modules of physical stands.

A standard power module and a three-phase network module of laboratory benches were used as an alternating voltage source. The difference between the modules is that the three-phase network module has the ability to be remotely controlled. The power module is connected to a network with a voltage of 0.4 kV industrial frequency. The laboratory power network models a high voltage line, and the selected modules model a distribution substation (Figure 1).

The next step is to simulate the process of reducing the voltage to a nominal value of 0.4 kV, which was achieved through the use of a single-phase transformer module. In this case, the lowest voltage in the module is 230 V; the module is a set of three single-phase transformers in a molded case. Next, in the simulated process, the reduced voltage is distributed along the power line, the physical processes of which are simulated in the module of the same name. This stand component has three-position rocker switches. In this case, two of them are responsible for changing the capacitance of the phase relative to the ground at the beginning and end of the line, and the third is responsible for the inductive and active resistance of the line itself. Selecting the position of the capacitance switch changes the number of capacitors connected in parallel from zero to two, and choosing the inductance comes down to changing the number of series-connected chokes, the maximum number of which is three.

It is known that changes in the nature of the consumer load and the parameters of generating sources lead to changes in the parameters of the network as a whole. The use of active network elements and controlled alternating current transmission systems (FACTS) technologies allows optimizing the operating mode of the energy system, in which consumers receive the necessary power with minimal transmission losses. Thus, a power transmission line with a controlled change in the active and reactive components of resistance is implemented. The simulated electrical network provides for the use of a controlled source of reactive power, for which the stand's capacitive load module (compensation module) is used. By choosing the optimal position of the compensation module switches, students can achieve minimal power losses in the line at a given complex load.

The electrical load itself is represented by series-connected modules of active and inductive loads, simulating the connection of an electric motor and a heater. The first component has eleven positions, and the second - five. By selecting a unique combination of load switch positions and power line module, the initial state of the power supply system is set for performing laboratory work, the essence of which is, as previously stated, to minimize losses. A power measurement module was also used, with which it is possible to measure such parameters as active, reactive and apparent power, linear and phase currents and voltages and their frequency.

In this way, the stand modules were adapted to the objectives of the project. The essence of the laboratory work is to set the initial position of the load switches and the power line module according to the options presented in the manual. Students are asked to find such positions of the switches of the compensation module at which the minimum value of voltage losses is achieved. In this case, certain line parameters characterizing the material of the cable core, its length and cross-section are set by the position of the switches of the power line module.

Performing laboratory work using a physical stand is possible both in person and remotely, since it is planned to place all-round cameras in the classroom, connected to a computer on which the teaching assistant software is installed, also developed at the department of "Electrical equipment and automation of industrial enterprises" .

The educational and research complex is complemented by a virtual reality system. To achieve this goal, the tasks were set to develop three-dimensional computer models of real physical equipment and electrical devices, a simplified representation of which is the

modules used in the physical stand. Thus, through this solution it is planned to achieve greater visibility and increase student involvement in the educational process. Also, the laboratory complex is supplemented with control and protection equipment from domestic manufacturers PC "OVEN", LLC NPP "Microprocessor Technologies", explosion-proof equipment from the company "GORELTEX" and a stand "Intelligent system for accounting, monitoring and management of electricity consumption" produced by LLC "MILUR IS". Thus, students receive not only academic knowledge and form an understanding of the physical processes that describe the transmission of electricity from generating facilities to the consumer, and the equipment used in this process, but also have the opportunity to develop practical work skills.

It seems possible to further improve the quality of the educational process through the design and implementation of the software part of the educational and research complex, which includes three components: a digital twin of the stand, an artificial intelligence algorithm, and the executive part of the program. In Figure 2. A functional diagram of an intelligent control system for operating modes of the electrical network using a digital twin model of the stand is presented [18].

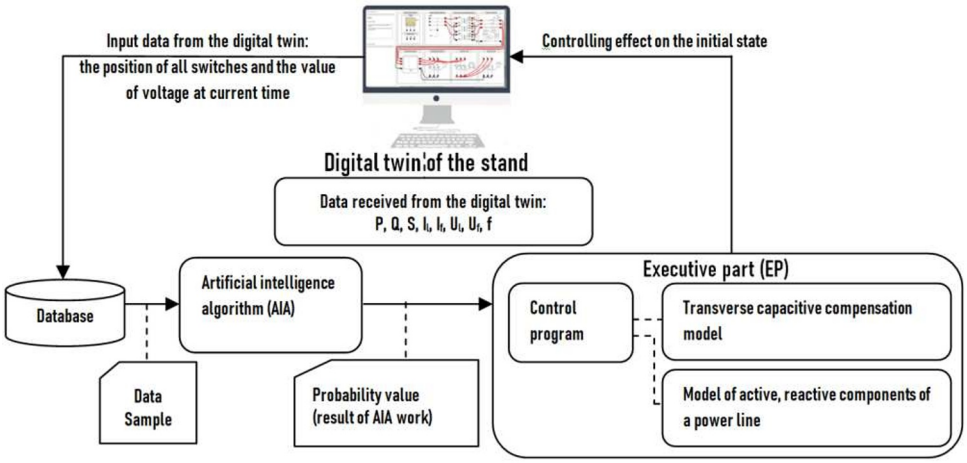

Fig. 2. Functional diagram of an intelligent control system for operating modes of a simulation model of a power system section.

Thus, through the development of a digital twin, it is proposed to transfer the experience of working with a physical stand into a distance learning format, which provides the opportunity to organize a network form of training and conduct laboratory work in a remote format as part of interuniversity cooperation.

The artificial intelligence algorithm makes it possible to introduce students to the use of promising technologies in the electric power industry, and also provides an opportunity to verify the reliability of the results obtained when working with a physical stand, and to evaluate the sufficient accuracy and efficiency of neural networks.

The executive part of the program is designed to apply the results of machine learning to the digital twin of the stand, automatically changing the position of the compensation module switches.

At the first stage of the project, measurements and studies of changes in the physical parameters of the stand were carried out at different switch positions.

The next step was choosing a programming language. Possible options considered were C# and Python. The first option offers an open machine learning library built into the .NET platform, providing access to popular frameworks such as Tensorflow, PyTorch and ONNX

through a simplified user interface. However, the choice was made in favor of the Python language due to its greater popularity in the programming community and the scientific community, as well as the availability of detailed documentation and training materials.

PyCharm Community Edition was used as an integrated development environment due to the presence of a convenient debugger and code completion, as well as ease of working with the version control system. At the same time, the latter is a particular advantage, since the work in the project format was carried out by a team and it was necessary to conduct parallel development. For this purpose, a distributed version control system (Git) was used and development was carried out in several branches, which were ultimately merged into a common code. Next, the structure of the neural network model was formed. It was decided to use the "Sequential" model supplied with the Keras library, presented in the form of seven layers.

3 Results

Figure 3 shows a fragment of the digital twin of the laboratory stand "Electrical System Model" [18], which implements loss control in a power transmission line. The model used an electrical machine load module.

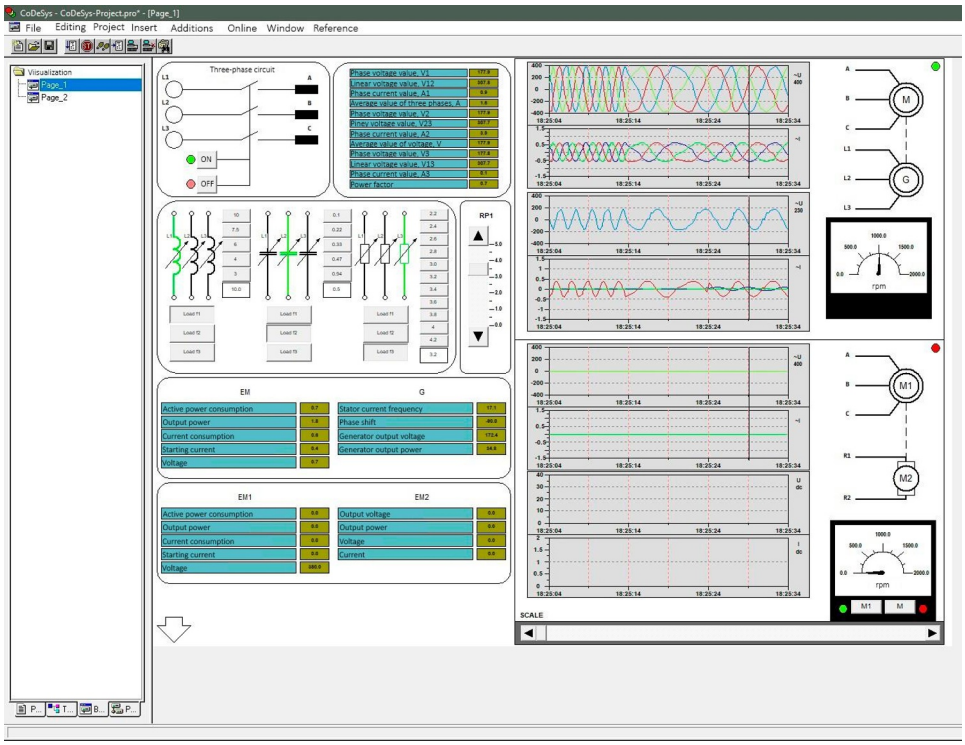

Fig. 3. Fragment of the digital twin of the laboratory stand "Electrical system model" [18].

Creating a digital twin is carried out according to the following algorithm: searching and importing libraries necessary for development; variables with constants used in further calculations are registered; processes are launched; the operating logic of the switches is set; the conditions for selecting laboratory work and event handlers for the buttons of the input switch module, power supply and three-phase network are prescribed. Then the selection conditions are written one by one and the corresponding values are indicated for

all possible positions of all switches presented in the model. The following describes the functions that involve the calculation of the physical process. The output data obtained as a result of executing these functions is converted into matrix form and transmitted to the artificial intelligence algorithm (Figure 2).

Figure 4 shows a listing of the part of the program responsible for calculating voltages, currents and power, as well as voltage losses in the line.

The user interface provides for the built-in operation of the developed neural network algorithm. Figure 5 shows the program window for the digital twin of the stand. On the left side, laboratory work is selected, recommended parameters for optimizing the power system are displayed, and vector diagrams are displayed.

On the right side, the operating principle and graphical representation of the elements correspond to the modules of the physical stand.

```
def current_calculation(voltage, resistance):
    """
    Функция расчета величины силы тока
    :param voltage: задаем величину напряжения
    :param resistance: задаем величину сопротивления
    :return: возвращаем величину тока
    """
    global current
    current = voltage / resistance
    return current
def voltage_calculation(current, resistance):
    """
    :param current: задаем величину тока
    :param resistance: задаем величину сопротивления
    :return: возвращаем величину напряжения
    """
    global voltage
    voltage = current * resistance
    return voltage
def power_calculation(current, voltage):
    """

    :param current: задаем величину тока
    :param voltage: задаем величину напряжения
    :return: возвращаем величину мощности
    """
    global power
    power = current * voltage
    return power
complex_circuit_resistance = line_complex_resistance +
load_complex_resistance  # полное комплексное сопротивление цепи
common_current = current_calculation(initial_voltage,
complex_circuit_resistance)  # общий ток в цепи
line_voltage_drop = voltage_calculation(common_current,
line_complex_resistance)  # падение напряжения на линии
```

Fig. 4. Listing part of the program.

The research carried out with a physical stand and its digital twin makes it possible to create a database for subsequent training of an artificial neural network. Supervised machine learning was used to train the model.

By processing the input data, the developed neural network produces probabilistic values characterizing the optimality of each individual position of the lateral compensation module switches for a given power system mode. The code designation of the highest probabilistic value, corresponding to the switch position at which losses in the network will be minimal, is sent to the executive part of the program for automatic control of the digital twin of the stand (Figure 2).

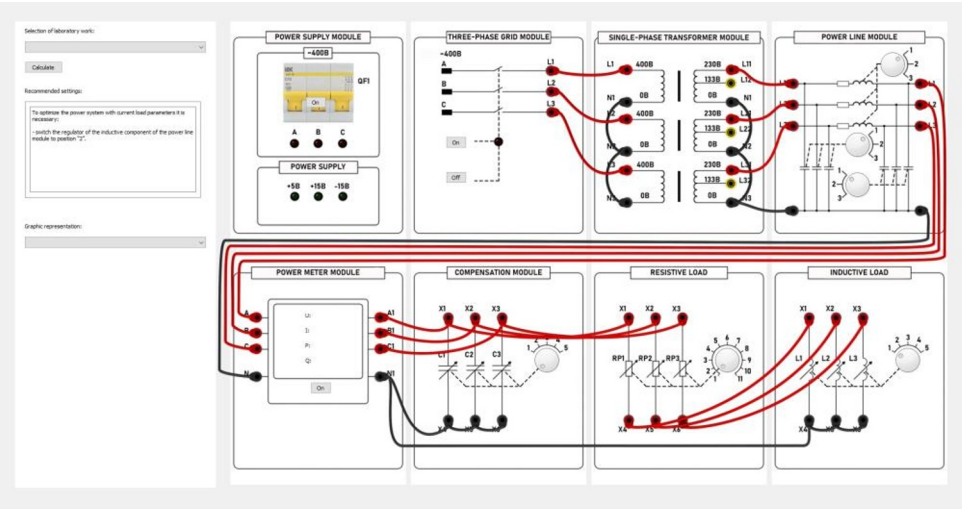

Fig. 5. Fragment of a simulation model of a digital twin of the stand.

4 Discussion

The accuracy of the neural network algorithm was assessed using a test sample, and an additional check was carried out to ensure that the algorithm was not overtrained. The adequacy of the model (unbiasedness, consistency, efficiency) was checked. As the sample size increases, the estimated value gets closer and closer to the true value, which is characteristic of the consistency of the model. According to the bias-variance dilemma, the robustness of the model was tested.

When comparing different methods of training neural networks, differing in the number of layers of neurons, training epochs and neuron activation functions, the best option turned out to be the type of training of a neural network algorithm with seven layers with the following number of neurons in a layer, respectively: 3; 4; 5; 4; 3; 2; 1. The activation function of the first layer had the “Relu” property, and the rest had the “Sigmoid” property. “ADAM” – adaptive moment estimation, based on the stochastic gradient descent method, was chosen as an optimizer. The MSE metric – mean squared error – was used as a loss function.

5 Conclusion

A digital twin of the stand has been implemented for research into intelligent systems and means of controlling the modes of power supply systems. The general program includes a developed neural network algorithm that makes it possible to recognize one of the possible operating modes of the power supply system, as well as to issue a solution for optimizing the parameters of an active-adaptive electrical network for given initial values of electrical load parameters. The educational and research complex allows you to study the operating principle of components used in basic technologies for adaptive control of an electrical network. The next stage after putting the laboratory complex into operation will be the addition of virtual and augmented reality software and hardware to study the design and operation of smart power systems equipment.

Acknowledgement

Work on the creation of an educational and research complex was carried out in accordance with the Development Program of the Ufa State Petroleum University for 2021-2030 as part of the implementation of the strategic academic leadership program "Priority-2030".

References

1. D. Dunikov, O. Popel, *Renewable energy XXI century: Energy and economic efficiency,* in Proceedings of the IV International Congress REENCON-XXI Renewable energy XXI century: Energy and economic efficiency, Skolkovo, 5-6 June, 2018, Moscow: JIVT RAS (2018)
2. Artificial intelligence, https://www.siemens.com/global/en/company/stories/artificial-intelligence.html
3. D. Cao, J. Zhao, W. Hu, N. Yu, F. Ding, Q. Huang, Z. Chen, Deep reinforcement learning enabled physical-model-free two-timescale voltage control method for active distribution systems, IEEE Transactions on Smart Grid, **13,** 149–165 (2021) DOI:10.1109/TSG.2021.3113085
4. N. Jin, F.Yang, Y. Mo, Y. Zeng, X. Zhou, K.Yan, X. Ma, Highly accurate energy consumption forecasting model based on parallel LSTM neural networks. Adv. Eng. Informatics, **51**, 101442 (2022) DOI:10.1016/j.aei.2021.101442
5. F. Byk, L. Myshkina, Effects of local intelligent energy systems integration. Power engineering research equipment technologytion, **24**(**1**), 3-15 (2022) DOI:10.30724/19989903-2022-24-1-3-15
6. X. Chen, G. Qu, Y. Tang, et al, Reinforcementlearning for selective key applications in power systems: Recentadvances and future challenges. IEEE Transactions on SmartGrid, **13**(**4**), 2935-2958 (2022) DOI: 10.1109/TSG.2022.3154718
7. C. Feng, J. Zhang, W. Zhang, B.M. Hodge, Convolutional neural networks for intra-hour solar forecasting based on sky image sequences. Applied Energy, **310**, 118438 (2022) DOI:10.1016/j.apenergy.2021.118438
8. A. Manobanda, O. Patricia, N. Granda, Electric energy demand forecasting in an oil production company using artificial neural networks. Latest Advances in Electrical Engineering, and Electronics, **933,** 3-16 (2022) DOI:10.1007/978-3-031-08942-8_1
9. M. Talaat, M. Elkholy, A. Alblawi, T. Said, Artificial intelligence applications for microgrids integration and management of hybrid renewable energy sources. Artificial Intelligence Review, **56**, 10557-10611 (2023) DOI:10.1007/s10462-023-10410-w
10. M. Baghdasaryan, V. Hovhannisyan, T. Hakobyan, Evaluating the possibilities of applying an artificial neural network for control and diagnostics of the electric drive systems. National Polytechnic University of Armenia, (2022) DOI:10.53297/18293328-2022.1-9
11. M. Perez-Ramirez, G. Arroyo-Figueroa and A. Ayala, The use of a virtual reality training system to improve technical skill in the maintenance of live-line power distribution networks. Interactive Learning Environments, **29(3)**, 1-18 (2019) Doi: 10.1080/10494820.2019.1587636
12. J. Gonzalez Lopez, R. Jimenez Betancourt, J. Ramirez Arredondo, E. Villalvazo Laureano, F. Rodriguez Haro, Incorporating virtual reality into the teaching and training of grid-tie photovoltaic power plants design. Applied Sciences, **9**, 1-12 (2019) DOI:10.3390/app9214480

13. E. Memik, S. Nikolic, The Virtual reality electrical substation field trip: Exploring student perceptions and cognitive learning. STEM Education, **1**, 47-59 (2021) Doi: 10.3934/steme.2021004
14. P. Palensky, M. Cvetkovic, D. Gusain, A. Joseph, Digital twins and their use in future power systems. Digital Twin, **1**, 4 (2022) DOI: 10.12688/digitaltwin.17435.2
15. P. Pileggi, J. Verriet, J. Broekhuijsen, C. Leeuwen, W. Wijbrandi and M. Konsman, Digital twin for cyber-physical energy systems. 7th Workshop on Modeling and Simulation of Cyber-Physical Energy Systems (MSCPES), Montreal, QC, Canada. 1-6, (2019) DOI:10.1109/MSCPES.2019.8738792
16. D. Akchurin, M. Bashirov, I. Kostikov, K. Nikolaev, Training simulation complex based on BASIS-100 PLC. Automation in Industry, **9**, 30-35 (2021) DOI: 10.25728/avtprom.2021.09.04
17. A. Kurbatov, A virtual engineer will help design energy facilities, https://inscience.news/ru/article/nti/9377
18. M. Bashirov, M. Shvan, E. Akhmetshina, A. Khakimov Development of a digital twin of the training laboratory complex. Components of Scientific and Technological Progress, **6** (**84**), 138-141 (2023)