Business Model Innovation of Off Grid Public Electric Vehicles Battery Swap Station with Solar Powered

Tubagus Alviannanda[1*] and *Vita* Lystianingrum[2†]

[1]PT Perusahaan Listrik Negara, Jakarta, Indonesia
[2]Institut Teknologi Sepuluh November, Surabaya, Indonesia

Abstract. Energy transition is Indonesia's national agenda to maintain energy security and realize the use of green energy. The use of electric vehicles (EVs) is one strategy to maintain primary energy security and support the reduction of carbon emissions. To support the growth of the EV ecosystem, Public Electric Vehicle Battery Swap Stations (Stasiun Penukaran Baterai Kendaraan Listrik Umum, SPBKLU) have been developed and installed in several locations. Currently, SPBKLU still uses electricity sources from the PLN (Perusahaan Listrik Negara, Indonesia's electricity state-owned company) grid, where the majority of the PLN grid itself still relies on gas and coal power plants. Hence, this work proposed a PV-powered battery swap station and presented the Business Model Canvas and financial and SWOT analysis. Two business model schemes are proposed, the BPCOSP (Battery Provider, Cabinet Owner, Solar PV Provider) and BPCOSL (Battery Provider, Cabinet Owner, Solar PV Lease) schemes. From these two business schemes, the results of the financial feasibility analysis for the SPBKLU swap rate were obtained at IDR 18,241 for the BPCOSP scheme and IDR 21,500 for the BPCOSL scheme. From a SWOT analysis perspective, the BPCOSP and BPCOSL business schemes have the opportunity to increase the Solar PV business value chain and support government programs in achieving Net Zero Emissions. However, there are still weaknesses in terms of tariffs which are still not economical compared to the fuel costs of conventional two-wheeled vehicles and the current SPBKLU swap tariff which still uses electricity from the PLN grid.

1 Introduction

Based on a statement from the Ministry of Industry of the Republic of Indonesia in 2021, the Government has set a roadmap for the development of Electric Vehicle (EV) with a production target in 2030 of 600 thousand units for four-wheeled vehicles and 2.45 million units for two-wheeled vehicles [1]. With the increasing number of EV users, it shall be supported by the growth of infrastructure for recharging EV batteries.

* Corresponding author: tbalvi@gmail.com
† Corresponding author: Vita@ee.its.co.id

Currently, there are EV battery recharging methods, namely by charging through Public Electric Vehicle Charging Station (SPKLU) or through the Public Electric Vehicle Battery Swap Station (SPBKLU), where for SPBKLU, 369 units have been installed and are still intended for two-wheeled vehicles.

SPBKLUs can purchase electricity from the power grid and/or resort to microgrids to obtain electricity generated by renewable energy. This can reduce charging costs for EV users and carbon emissions of mobility [2]. Anyway, the existing SPBKLU services are still dependent on the PLN power grid, so consolidated they are still unable to suppress carbon emissions because the energy generated for the recharge of SPBCLU is still sourced from the mixed energy of fossil and Renewable power plants. Therefore, in support of the energy transition, this paper will analyze the business model of the SPB KLU powered by Solar PV, namely, through the analysis of the investment cost needs of SPBKLU and Solar PV with 2 (two) different business schemes using financial analysis approaches, and SWOT analysis.

2 Methodology

According to IRENA in the Indonesian Energy Transition Energy Outlook, electricity consumption could grow exponentially due to the impact of increased use of electric vehicles in the middle of the 21st century [3]. This will be achieved when the government's program of accelerating 13 million electric motorcycles is reached by 2030.

By 2020, the Ministry of Energy and Mineral Resources has set a supply target of more than 10,000 SPBKLUs to support the development of EVs in Indonesia. In terms of concept, the SPBKLU based solar panels are almost the same as the Solar Power Plant (PLTS) which uses battery technology as energy storage with off grid schemes. The difference is, the SPBKLU serves to recharge the batteries that will be used for electric vehicles especially the two wheels (**Fig. 1**).

Fig. 1 SPBKLU design examples

Based on the title of this paper, a financial analysis will be carried out of the need for investment costs of Solar PV and SPBKLU to obtain eligibility for battery swap rates according to the business model scheme.

In order to calculate the investment cost requirements for Solar PV for SPBKLU we need to know the energy needs of the battery during the charging process. As for the potential energy from the sun that can be obtained through Solar PV, the author uses the reference irradiance level (IL) of the sun in the region of Jakarta through the site https://globalsolaratlas.info/ and the assumption to determine the energy requirement of

the battery is when the entire battery is charged simultaneously where the number of batteries is determined according to the specifications of SPBKLU.

In this paper there are problem restrictions, so that the discussion is more specific and has clear boundaries. The limitations of the problem are as follows:

a. The research location is SPBKLU in Jakarta and surrounding areas, especially SPBKLU for Gesits brand.
b. Battery specifications that are discussed in this study are the batteries used in Gesits brand.
c. The financial and SWOT analysis conducted is limited to the business model scheme to be discussed.

3 Result and discussion

In analyzing the innovation of Solar powered SBKLU business model, several stages are required with the following flow (**Fig. 2**).

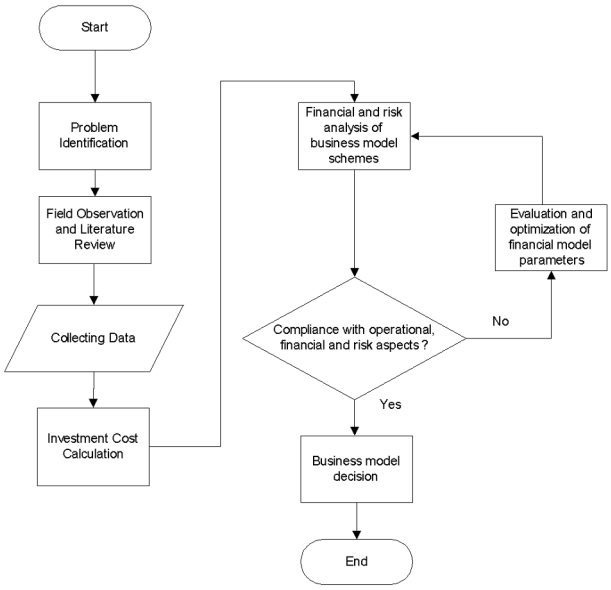

Fig. 2 Research Flow

As for the SPBKLU specifications used by **Table 1**. The parameters are the specifications of the SPBKLU sampled for this study, where SPBKLU specification is one example of several SPBKLUs that have been circulating in several regions. There are supporting components in SPBKLU with offgrid schemes including Solar Charge Controller (SCC), DC bus bar and Battery Management System (BMS). The function of each component is as follows:

a. The SCC prevents overcharging of the battery by limiting the amount rate of charging to the battery, the SCC in this SPBKLU system also act as an EV battery charger.
b. DC bus bar is a cooper or aluminium plate that functions as a conductor and distributes electricity from its source to the batteries.

c. BMS is an electronic system that functions to regulate, monitor, and maintain the battery from condition that damage the battery.

Table 1. Example of SPBKLU Specification

No	Part	Information
1	Docking battery charger	1. 8 battery slots (6 active, 2 spare standby) 2. Charging feature = a. Normal charging b. Auto stop 3. Charging LFP Lithium-ion battery 4. Charger output 72 Vdc, 3 A (216 Wh)
2	Battery slot	Nominal Voltage 60 Vdc dan 72 Vdc
3	Power Supply	100-240 VAC (as built), for this research requires modification using a DC power supply from solar PV
4	Battery Specification	72 V, 20 Ah 1000 charging cycles

From SPBKLU specification, the conceptual design of Solar PV integration for SPBKLU with an off-grid scheme is as follow (**Fig. 3**):

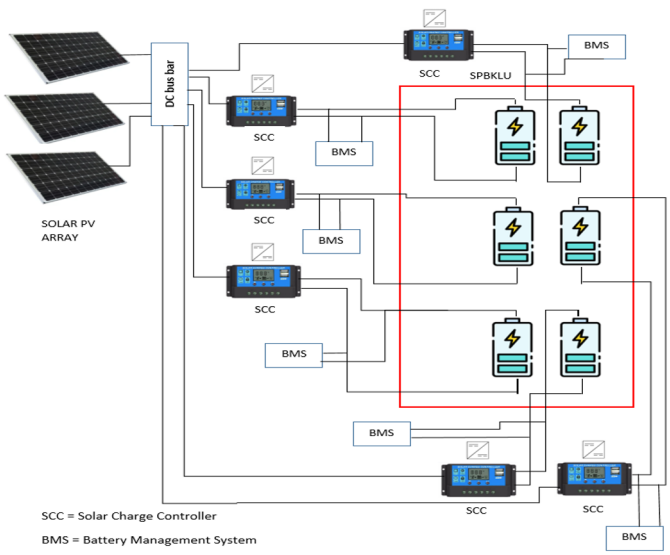

Fig. 3 Solar Powered SPBKLU schematic

In calculating required number of Solar panels for SPBKLU, we shall determine the maximum energy needs as described in equation (1), where the maximum energy needs at SPBKLU use several assumptions including:

a. 6 (six) batteries on the SPBKLU are charged at the same time;
b. 6 (six) EV batteries swapped at SPBKLU in 80% Depth of Discharge (DOD) conditions;
c. 6 (six) batteries with condition according to the assumptions of points 1 and 2 are charged to 100% State of Charge (SOC).

In accordance with the limits of the problems described, the location of the subject of the research is limited to the area of Jakarta and its surroundings. From the location we've already determined, we're going to have to get statistical data on the sun's irradiance level (IL) at that location, as for this research, IL data for the Jakarta area and its surroundings can be obtained from https://globalsolaratlas.info/. Global Solar Atlas itself is a Geographic Information System (GIS) based application provided by the World Bank Group in order to support the use of solar technology in various countries. The following is the estimated IL data around Jakarta for each year.

Average hourly profiles

Direct normal irradiation [Wh/m^2]

	Jan	Feb	Mar	Apr	May	Jun	Jul	Aug	Sep	Oct	Nov	Dec
0 - 1												
1 - 2												
2 - 3												
3 - 4												
4 - 5												
5 - 6										1	5	1
6 - 7	42	19	45	56	63	50	44	36	54	84	95	71
7 - 8	127	90	186	231	243	225	221	240	259	216	177	150
8 - 9	166	125	246	315	338	320	337	352	353	284	240	201
9 - 10	172	137	255	338	364	359	388	403	386	293	243	204
10 - 11	180	149	261	317	336	341	382	375	368	285	229	197
11 - 12	207	175	268	297	316	316	346	372	375	290	243	206
12 - 13	233	212	286	304	330	316	345	398	420	325	246	218
13 - 14	227	249	293	306	323	311	356	415	426	345	248	210
14 - 15	210	216	247	241	265	270	304	369	369	277	197	170
15 - 16	157	163	181	168	194	198	230	272	250	174	125	115
16 - 17	102	93	105	90	112	123	138	147	120	77	65	69
17 - 18	47	32	30	14	12	14	26	25	13	7	9	21
18 - 19												
19 - 20												
20 - 21												
21 - 22												
22 - 23												
23 - 24												
Sum	1870	1660	2403	2677	2896	2844	3115	3404	3392	2658	2122	1834

Fig. 4 Distribution of IL for Jakarta area & and its surrounding

From **Fig. 4**, it can be seen that the lowest IL is in the range of February and the highest IL is in the range of August and September where the estimated average IL per year is about 1674,7 kwh/m2 with an estimated Solar PV power that can be generated 1.273 Mwh per year based on data compiled by Global Solar Atlas.

As for calculating the estimated Solar PV needs, we must also know the lowest IL value obtained in one year along with the duration of time that is effective in getting IL from the sun, therefore we need an IL profile for each month. To get the capacity of Solar PV modules, minimum average value of irradiation can refer to the Global Solar Atlas website where the average level of solar irradiation in Jakarta is around 941,1 kWh/m2 for each year.

Based on the **Fig. 4**, it is known that IL is only obtained around 06.00 to 18.00 WIB, from this data we can calculate the Solar PV requirement with the following equation:

$$\text{Total Module energy} = \text{Maximum energy need}100\%\text{-Losses} \tag{1}$$

$$\text{Module Capacity} = \text{Total module energy}\text{Minimum IL x Gstc (irradiance reference)} \tag{2}$$

According to the assumption previously described, the energy requirements charge for each battery that have been obtained from the calculation is as follows (**Table 2**).

Table 2. Energy requirement per battery to be charged

Battery 100% full power capacity condition = a	Condition 20% battery capacity (80% DOD) = b	Power to be discharged = a - b
1440 Wh	288 Wh	1152 Wh

Based on battery and SPBKLU specifications, Solar PV needs to be able to accommodate charging six (6) batteries simultaneously. Therefore, the maximum energy demand is 6,9 Kwh. The total losses of the Solar PV system, Solar Charge Controller (SCC) and wiring are about 15% [4].

Table 3. Battery energy needs

The Number of batteries charged = a	Charge duration (hour) =b	Charger per Battery (Watt) = c	Energy demand (kilo watt) = a x b x c
6	5,3	216	6,9 KWh (maximum)
1	5,3	216	1,2 KWh (minimum)

From the data in **Fig. 4** and **Table 3.**, we can get the total module energy using equation (1) and module capacity using equation (2) with the following calculation results:

Analysis	Result
Total module energy	8,12 kWh
Module capacity	5073 Wp

3.1 Bcosp and bpcosl business model

Currently, the business model for SPBKLU has been carried out by both Indonesia State-Owned Enterprise and also from the private sector, but the SPBKLU business model run in all entities still uses resources from the PLN grid.

Meanwhile, SPBKLU business model has already socialized in "Webinar on Socialization of Minister of Energy and Mineral Resources Regulation Number 13-year 2020 and launching of SPBKLU at the Directorate General of Electricity (Dirjen Gatrik)", the SPBKLU business model is still with scheme:

a. Company or business entity (Badan Usaha, BU) as SPBKLU cabinet owner and battery provider (BPCO); and
b. Company or business entity as SPBKLU cabinet tenant and battery provider.

In the Battery Provider, Cabinet Owner, Solar PV Provider (BPCOSP) business model, the investment costs of SPBKLU cabinets, batteries and Solar PV are charged to one business entity so that the revenue obtained from battery swaps become the full revenue of the business entity. BPCOSP and BPCOSL business model can be described with Business Model Canvas (BMC) [5] as follows (**Fig. 5**):

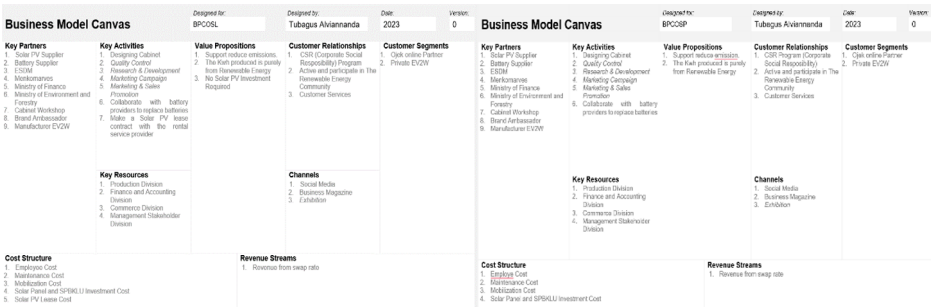

Fig. 5 BMC BPCOSP dan BPCOSL Business Model

In the Battery Provider, Cabinet Owner, Solar Lease (BPCOSL) business model, the investment costs consist of SPBKLU cabinet and batteries. The lease of Solar PV is part of the operating cost (OPEX), so that there is a Joint Operation (Kerja Sama Operasi, KSO) between two entities in running the Solar powered SPBKLU business, namely between the business entity that owns the SPBKLU and the business entity that provides Solar PV lease services. The Solar PV rental service provider in the business scheme also provides maintenance services for the leased Solar PV. The BPCOSL business model can be described with the BMC as follows:

3.2 Financial analysis of the business model

Based on the analysis of the calculation of Solar PV requirements, we can estimate the total investment cost of SPBKLU powered by Solar PV in the with the following budget plan (**Table 4**).

Table 4. Estimate Budget Plan

No	Component	Number
1	SPBKLU	1 Unit
2	EV Batteries	6 Unit
3	Solar PV	10 Panels
4	SCC	6 Sets
5	Cables	1 Lot
	Total Cost	**Rp177.467.984**

From the investment costs required, it is necessary to analyze the financial feasibility to obtain the feasibility of the SPBKLU battery swap tariff price using the following assumptions:

a. The economic life of SPBKLU and Solar PV are 20 years;
b. The lifetime of EV battery is three (3) years, thus requiring battery replacement in the fourth year and are included in the O&M Cost;
c. Weight Average Cost of Capital (WACC) of 9,28% refers to one of the business entities;
d. Corporate income tax is 22%;

e. The OPEX cost assumption is maintenance services at the Jakarta Regional Minimum Wage rate for 2 workers of Rp5.000.000 per person with 3% escalation each year;
f. Depreciation of assets using the *Straight-Line Model*;
g. The assumption of the number of swaps per battery is two (2) times per day due to Solar IL and based on the battery characteristic of the charger so that in a year 4380 swaps can occur.
h. No need for land lease or investment costs with assuming SPBKLU is installed within the land area owned by the business entity itself.

Based on the calculation of the financial analysis [6] of the BPCOSP and BPCOSL business model, the battery swap feasibility tariff rate for the BPCOSP is **IDR 18,241** per swap so that the revenue generated can cover operational costs every year. Meanwhile, the BPCOSL business model feasibility tariff rate is **IDR 21,500** per swap. The swap feasibility rate is obtained after optimization where the Solar Powered SPBKLU is made as many as 5 (five) sets with the same operating costs as 1 (one) set of Solar powered SPBKLU. The financial feasibility parameters obtained from the calculation are as follows:

Table 5. Feasibility Calculation Results

Business Model	Internal Return Rate (IRR)	Net Present Value (NPV)	Benefit Cost Ratio (BCR)	Payback Period	Tariff
BPCOSP	10,01 %	Rp38,807,872	1.0019	6.8 years	IDR 18,241
BPCOSL	10,17%	Rp39,023,924	1.0086	6.8 years	IDR 21,500

From **Table 5**, we get the result that the current fuel cost for conventional two-wheeled vehicles and the SPBKLU as is business model is still more economical than the BPCOSP and BPCOSL swap tariff. The following is the comparison **Table 6**.

Table 6. Comparison of Economic Tariff Cost

Vehicle type	Energy Consumption	Fuel Cost/Swap rate
Gas 2W	40 Km/liter	IDR 10,000 – 14,000 per liter
Electric 2W	40 Km/kWh	IDR 21,500 (BPCOSL), IDR18,241 (BPCOSP)
Electric 2W	40 KM/kWh	IDR 8,000 per swap (SPBKLU powered with PLN grid)

In order for the Solar powered SPBKLU businesses to increase and sustainable, a SWOT analysis is needed based on the results of the financial analysis and BPCOSP and BPCOSL business models (**Table 7**).

Table 7. SWOT Analysis

IFAS *EFAS*	**Strength** • Zero Emission Technology • Escalation of Solar Energy Utilization • Support Energy Transition Agenda	**Weakness** • High-Cost Investment • The Battery can't be Charged at Night
Opportunity • Increasing Solar PV Business Value Chain • Add Job Vacancies for Solar PV and SPBKLU maintenance services • Business Potential for Carbon Credit and Renewable Energy Certificate (REC) for the SPBKLU Cluster	**Strategy SO** • Socialization to relevant stakeholders regarding BPCOSP or BPCOSL business model • Approach with regulators regarding policies for initiating carbon credit businesses or issuing Renewable Energy Certificates (REC) for SPBKLU businesses.	**Strategy WO** • Collaborating in partnership with Solar PV manufacturers • SPBKLU can function in a hybrid manner by taking energy from the PLN grid at night
Threat • Battery and Solar PV resources are Dwindling	**Strategy ST** • Create long-term cooperation agreements with battery and solar panel manufacturers for guaranteed supply	**Strategy WT** • Sharing Knowledge through workshops with battery manufacturers regarding potential development of the SPBKLU system • Running a Hybrid business by selling electrical energy from Solar PV when not charging the battery.

4 Conclusion

From the analysis, it can be concluded that the need of Solar PV panels used for SPBKLU energy sources depends on the sun's irradiance level and the total energy needed to charge the battery. The BPCOSP business model swap rate is lower than the BPCOSL because the maintenance costs for Solar PV are separate from the SPBKLU's. One of the shortcomings of the BPCOSP and BPCOSL business models is that SPBKLU does not get energy sources at night. With the development of battery technology, it is hoped that it can increase lifetime and reduce battery investment cost, thereby also potentially reducing SPBKLU swap rates with BPCOSP and BPCOSL business model. Lastly, from the SWOT analysis, SPBKLU with solar-powered has the potential to grow and generate new revenue streams e.g., carbon credit and REC issuance.

References

1. Kementrian Perindustrian RI Upaya Pemerintah Jadikan Indonesia Pemain Utama Industri Kendaraan Listrik 2021.
2. Permana, A.F.; Prasetya, S. Studi Pendahuluan Sistem PLTS Off Grid Sebagai Sumber Mobile SPBKLU. **2022**.
3. Irena Indonesia Energy Transition Outlook 2022.
4. Wandari, D.; Noegroho, N.; Tedja, M. An Application of Solar Panel for Energy Efficiency at Vertical Building in Lebak Bulus Jakarta. *IOP Conf. Ser.: Earth Environ. Sci.* **2021**, *794*, 012213, doi:10.1088/1755-1315/794/1/012213.
5. Sholichah, A.; Sutopo, W. Strategy Business of Battery Swap for Electric Vehicle Using Business Model Canvas. *Materials Science and Engineering* **2020**.
6. *Kasmir Dan Jakfar. (2012). Studi Kelayakan Bisnis. Jakarta: Kencana. Hlm 262.*;