Promoting sustainable safety: integrating fall detection for person and wheelchair safety

Sanjeeva Polepaka[1*], *Harshini* Sangem[1], *Amrutha Varshini* Aleti[1], *Akshitha* Ajjuri[1], *Myasar* Mundher adnan[2], *Swathi* B[3], *Amandeep* Nagpal[4] and *Ravi* Kalra[5]

[1]Department of AIMLE, GRIET, Hyderabad, Telangana, India.
[2]The Islamic university, Najaf, Iraq.
[3]Department of Information Science Engineering, New Horizon College of Engineering, Bangalore, Karnataka, India.
[4]Lovely Professional University, Phagwara, Punjab, India.
[5]Lloyd Institute of Engineering & Technology, Knowledge Park II, Greater Noida, Uttar Pradesh, India.

Abstract. Fall detection systems are crucial for ensuring the safety of the elderly, especially those who are wheelchair-bound. A potential remedy involves promptly detecting human falls in near real-time to facilitate rapid assistance. While various methods have been suggested for fall detectors, there remains a necessity to create precise and sturdy architectures, methodologies, and protocols for detecting falls, particularly among elderly individuals, especially those using wheelchairs. The objective is to design an affordable and dependable IoT-based system for detecting falls in wheelchair users, alerting nearby individuals for assistance and promote sustainable safety. The setup includes a MEMS Sensor, GSM module, and Arduino UNO microcontroller for detecting falls, with the goal of securing the well-being and promoting independent living for the elderly.

1 Introduction

The Unified Fall Detection System is a comprehensive solution aimed at safeguarding individuals, whether they are mobile or wheelchair users, by effectively identifying and responding to falls. Its primary objective is to reduce the likelihood of injury and provide timely assistance in case of an emergency. It takes into account the distinct movement patterns and safety concerns of both ambulatory individuals and those using wheelchairs. Furthermore, the system is designed to be scalable, capable of accommodating a growing number of users while maintaining its reliability and performance. To achieve accurate fall detection in real-time, the system leverages advanced sensor technologies and algorithms. The focus here is on minimizing errors, both false positives and negatives and to ensure the system's dependability. Additionally, the implementation includes a responsive mechanism that immediately initiates appropriate actions upon detecting a fall. Overall, the goal is to

* Corresponding author: sanjeeva1690@grietcollege.com

enhance the safety and well-being of individuals by offering seamless monitoring and immediate intervention when required.

The proposed system is designed with a user-centric approach, particularly focusing on the specific needs and obstacles encountered by wheelchair users. The objective aims to promote sustainable safety. The efficiency of the paper focus on achieving precise fall detection, underscoring the importance of accurately identifying falls. Success lies in the system's user-centric design, which comprehensively addresses the distinct challenges faced by wheelchair users. Problem Statement

By employing IoT infrastructure, this research aims to develop a system that accurately detects falls in real-time, leveraging advanced sensor technologies. The swift response mechanism will bridge the gap between detection and assistance. Upon identifying a fall, the system will trigger an immediate response. This may involve sending real-time notifications to caregivers, family members, or emergency services, enabling prompt assistance and potentially minimizing the impact of the fall on the user's well-being. The paper is structured as follows: Section 2 provides a comprehensive literature review. Section 3 provides a comparative analysis of the existing approaches. In Section 4, we delve into the components utilized in designing the proposed system. A block diagram outlining the proposed system, accompanied by a concise explanation of the methodology through a flowchart, is presented in Section 5 and Section 6. Section 7 discusses the result analysis. The concluding remarks of the paper, along with future work considerations, are outlined in Section 8.

2 Literature survey

2.1 Authors of [1] the research delves into the global health concern posed by falls and introduces a framework for detecting wheelchair fall anomalies. This framework combines the Isolation Forest (IF) and threshold-based method (TBM). To address uncertainties stemming from sensor noise, a technique involving Zero Angular Rate Update and Complementary Filter was employed. Sensor fusion was utilized to generate multidimensional training data, focusing on extracting the most relevant features.

2.2 Authors of [2] the report elucidates the scenario of fall detection devices tailored for elderly individuals utilizing wheelchairs or scooters, underscoring the urgent requirement for design focused on user needs and improved functionality. Current devices, while available, often fall short in addressing the specific requirements and preferences of this demographic, resulting in usability challenges and limited effectiveness.

2.3 Authors of [3] the report underscores the critical healthcare concern of fall prevention in aging societies, as fall accidents often result in multiple fractures and can have life-shortening effects. Recovering from a fall accident is particularly challenging for elderly individuals. Hence, there is a pressing need for fall risk assessment in the elderly population.

2.4 The authors of [4] the report emphasizes the significance of preventing falls among the elderly, as such accidents often lead to multiple fractures and considerable life-shortening consequences, particularly for the aging population. The assessment of fall risk in older individuals is crucial, commonly involving the measurement of the time taken for them to sit down and stand up, as prolonged duration in these movements correlates with an increased risk of falling.

2.5 The authors of [5] the research discusses this section, which focuses on the design of a system algorithmic approach to predict instances where elderly individuals in wheelchairs might attempt to stand up, posing a risk of falling. The cloud-based framework proposal intends to provide real-time notifications that are scalable, redundant, and able to manage substantial network traffic across numerous facilities, each with multiple monitored wheelchairs

2.6 The authors of [6] the report is stating about the development of intelligent wheelchairs for individuals with mobility impairments has emerged as a promising solution to address the challenges faced by users in operating powered wheelchairs effectively. These challenges often arise due to various physical or cognitive limitations experienced by individuals.

2.7 The authors of [7] the report demonstrates that natural language serves as a versatile and potent control method, capable of transforming a wheelchair from a mere vehicle into a genuinely helpful assistant. Despite the increasing integration of natural language control in autonomous wheelchairs, most of these systems can only handle a limited set of rigid commands.

2.8 The authors of [8] the paper report illustrated findings revealed that the Apple Watch Series 5 exhibited a mere 4.7% sensitivity in detecting falls from wheelchairs among able-bodied young adults. This sensitivity indicates the device's ability to accurately identify true positives, meaning it correctly detected falls in only a small fraction of cases.

2.9 The authors of [9] the efforts were made to address the insufficiency of automated devices for detecting falls in wheelchair users by creating and training a machine learning-based fall detection algorithm. This algorithm developed using Neural Network classifiers and accelerometer data from various body placements, demonstrated remarkable accuracy in distinguishing between falls and wheelchair-related activities.

2.10 The authors of [10] the paper report illustrates that despite the existence of advanced and robotic technologies in modern wheelchairs, many disabled individuals are unable to access them due to high costs, technical limitations, and safety concerns. To address this issue, a system incorporating IoT-based emergency messaging systems for fall detection was proposed to ensure user safety.

3 Components description

3.1 MEMS Sensor

The MEMS sensor plays a vital role in ensuring real-time monitoring and safety for both the individual and the wheelchair. Acting as the primary sensor, the MEMS (Micro-Electro-Mechanical Systems) which is in Fig. 1, accelerometer detects changes in acceleration and orientation. Positioned strategically within the system, it continuously gathers data on wheelchair movement and user position. Specifically, the MEMS sensor detects sudden acceleration changes that may indicate a fall or abrupt movement.

Fig. 1. MEMS Sensor

3.2 Arduino UNO Microcontroller

The Arduino Uno microcontroller assumes a central and crucial role in coordinating the various components of the system. Positioned at the heart of the architecture, it acts as the system's core, facilitating the integration and synchronization of data from multiple sources such as the accelerometer, GSM module, buzzer, LCD display, Wi-Fi module, and mobile phone. Responsible for processing real-time data received from the accelerometer, which detects changes in acceleration and orientation indicative of potential falls, the Arduino Uno executes a fall detection algorithm to analyze sensor data and ascertain if a fall event has occurred. Upon detection of a fall, it triggers subsequent actions within the system. Additionally, its connectivity with the GSM module enables communication over cellular networks.

3.3 GSM Module

The GSM module in Fig.2 plays a crucial role in ensuring swift communication and response during fall or emergency situations.. Specifically, the GSM module facilitates the transmission of fall detection alerts to caregivers, family members, or emergency services. Upon detection of a potential fall by the accelerometer main sensor, the Arduino microcontroller processes the data and, upon confirmation, activates the GSM module to promptly send an alert. These alerts can be in the form of SMS messages or calls to preconFIGUREd mobile phone numbers.

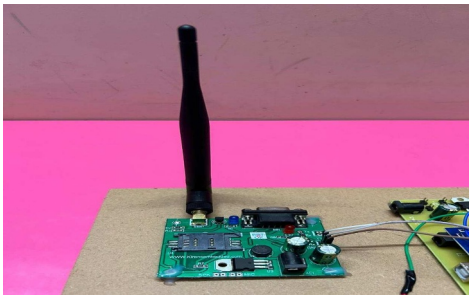

Fig. 2. GSM Module

3.4 Wifi Module

The Wi-Fi module serves as a System on Chip microchip, primarily employed in the development of endpoint IoT applications. It operates as wireless transceiver and is economically priced, facilitating internet connectivity for various embedded systems applications. Third-party manufacturers like AI Thinkers have played a key role in introducing and developing the ESP8266 Wi-Fi module (Fig.3), particularly for IoT-based embedded applications. This module effectively manages Wi-Fi network functions from an application processor.

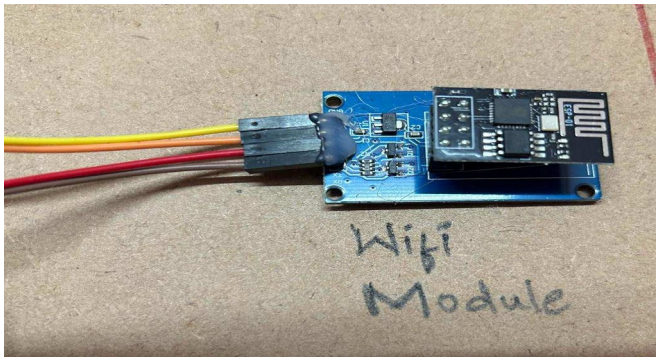

Fig. 3. Wifi Module

3.5 LCD Display

Incorporating an LCD (Liquid Crystal Display) into a wheelchair fall detection IoT (Internet of Things) module can improve the user interface and provide valuable information to users and caregivers.

3.6 Buzzer

The buzzer serves to provide an audible alert when a fall is detected, notifying nearby individuals or caregivers of a potential emergency. Its sound quickly draws attention to the fall event, making it suitable for users with impaired hearing or those in close proximity. By connecting the buzzer to the IoT module and programming it to sound an alarm upon detecting a fall, it ensures prompt awareness of the situation.

4 Proposed System

The proposed system aims to reduce false alarms and prevent accidents resulting from wheelchair falls, which can occur due to various factors such as uneven terrains, unexpected obstacles, sudden directional changes, or mechanical issues with the wheelchair itself. To overcome these challenges, specific sensors, including MEMS sensors, are incorporated to accurately detect falls and differentiate them from regular wheelchair movements. This enhanced fall detection capability ensures a more reliable and responsive solution to enhance wheelchair user safety. The architecture of the proposed Wheelchair Fall Detection system in Fig.4 comprises essential components seamlessly integrated to ensure and promote sustainable safety monitoring. The MEMS accelerometer sensor acts as the primary input device, detecting crucial acceleration and orientation changes for identifying falls.

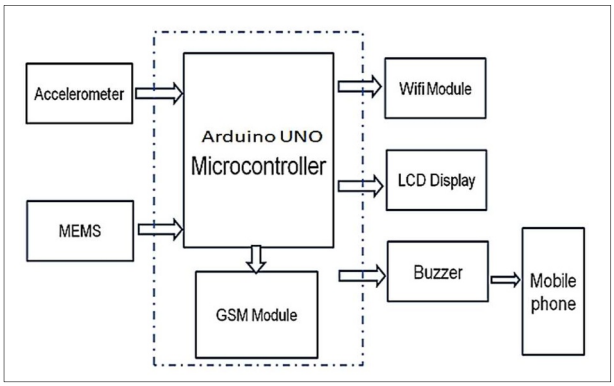

Fig. 4. Proposed System's Architecture Diagram

MEMS (Micro-Electro-Mechanical Systems) sensors play a critical role in fall detection systems, particularly concerning wheelchair safety. These sensors, including accelerometers and gyroscopes, are commonly employed to measure alterations in acceleration, tilt, and orientation.

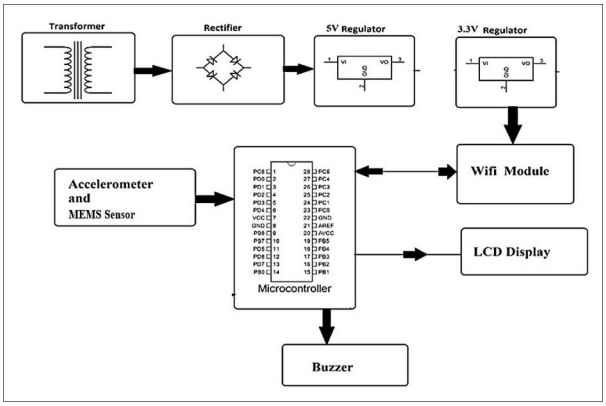

Fig. 5. Block Diagram

5 Proposed Methodology

The proposed methodology for fall detection entails a unified system that incorporates a MEMS sensor linked to an Arduino microcontroller for precise identification of falls as shown in Fig.6. This system seamlessly integrates a GSM module equipped with a SIM card from a mobile phone, alongside a Wi-Fi module to enable comprehensive communication. Upon detecting a fall, the GSM module initiates communication via the SIM card, while simultaneously, the Wi-Fi module dispatches fall alerts to predetermined contacts. Auditory alerts, produced by a buzzer, and visual confirmation through an LCD display enhance the system's responsiveness.

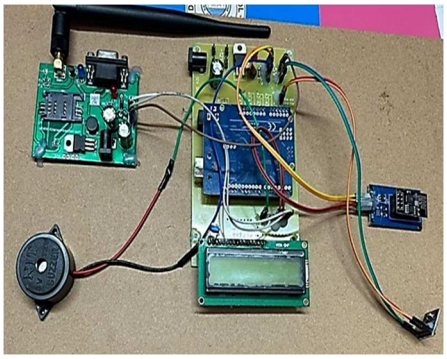

Fig. 6. Fall Detection System Setup

5.1 Module 1: Input and processing

The first module focuses on input acquisition and data processing, serving as the cornerstone of the entire fall detection system. At its core lies the implementation of a primary sensor strategically positioned to detect falls. This sensor is intricately linked to the Arduino microcontroller, which serves as the central processing unit. The microcontroller, functioning as a versatile computing hub, plays a crucial role in conducting real-time data analysis. It serves as the interface where raw data from the sensor undergoes processing through a specialized fall detection algorithm. This initial stage is paramount, ensuring the accurate interpretation of data from the sensor.

5.2 Module 2: Fall detection

The second module lies the fall detection algorithm embedded within the Arduino microcontroller. Essentially, this module encapsulates the intelligence of the fall detection system. The algorithm meticulously analyzes acceleration patterns, tilt, and orientation changes, effectively distinguishing between routine movements and falls. This high level of sophistication ensures that the system minimizes false positives and negatives, which are critical for the reliability of any fall detection solution. The outcome of this module is a nuanced and accurate determination of fall events, laying the foundation for subsequent stages in the fall detection process.

5.3 Module 3: Message transmission

Module three focuses on the communication infrastructure of the fall detection system, ensuring the prompt and reliable transmission of fall alerts to designated recipients. Key components include the integration of a GSM module, equipped with a SIM card, and a Wi-Fi module, providing redundancy in communication channels. The GSM module, connected to the Arduino microcontroller, is activated upon fall detection. It initiates communication via the SIM card, utilizing cellular networks to transmit fall alerts. Concurrently, the Wi-Fi module is activated, offering an alternative channel for message transmission. This dual-network approach ensures that fall alerts can reach recipients, even in areas with limited cellular coverage, thereby enhancing the system's reliability. All the modules related information in provided in the flow chart in Fig.7.

5.4 Module 4: Output

The concluding module focuses on presenting output, incorporating both auditory and visual feedback mechanisms. Upon detecting a fall, a buzzer is triggered, emitting an audible alert to draw immediate attention. Concurrently, an LCD display is utilized to provide visual confirmation of the fall event.

6 Results

Given the preceding information, it's evident that the proposed wheelchair fall detection system represents a comprehensive endeavour, and promotes sustainable safety for users. Central to this system is the integration of a MEMS sensor(Fig.9), which diligently monitors wheelchair movements and orientations. The Arduino microcontroller serves as the central intelligence, adeptly processing the intricate data received from the MEMS sensor. Collaboration extends to the Gizmo module, facilitating seamless communication among system components. Moreover, the integration of a SIM card enhances the system with mobile network connectivity, facilitating swift and direct communication to ensure critical alerts promptly reach designated recipients. Concurrently, the WiFi module expands connectivity options, enabling remote monitoring and data transmission, thereby amplifying the system's versatility shown in Fig.8.

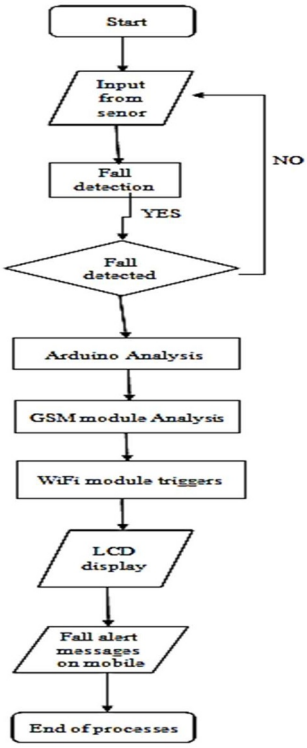

Fig.7. Flow Chart

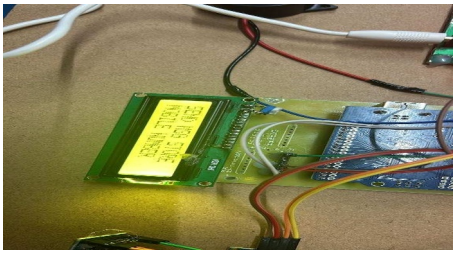

Fig. 8. LCD Display Commands

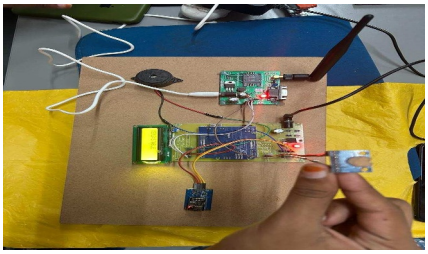

Fig. 9. MEMS is stable

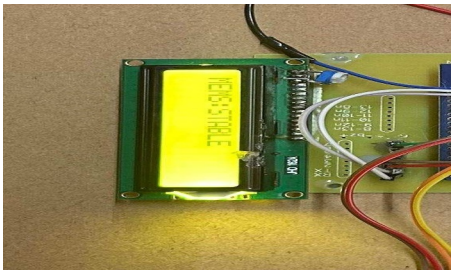

Fig. 10. LCD Display-MEMS Stable

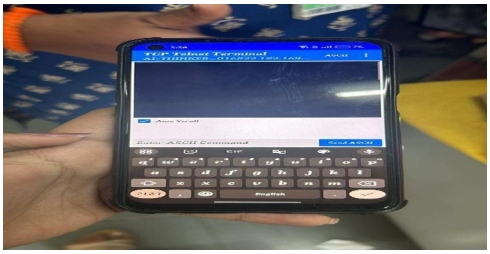

Fig. 11. Connection with Wifi Module

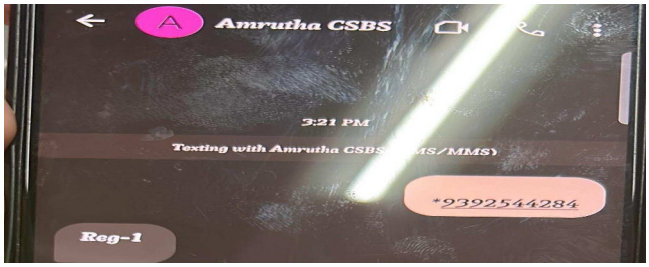

Fig. 12. Caretaker Mobile number Registration

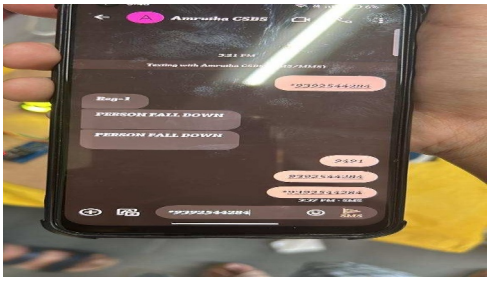

Fig. 13. Fall Detected

7 Conclusion and future enhancements

By incorporating cutting-edge technologies into a wheelchair, the device enhances the mobility and safety of people who are paralysed or elderly. A MEMS sensor is used in the system to detect movement and changes in orientation, and an Arduino microcontroller is used to regulate its overall operation. The built-in buzzer allows for audible alarms, such as warnings of impending falls. Thanks to the wheelchair's Internet of Things features, family members or carers can remotely monitor and regulate the user's motions. Among its noteworthy features is fall detection, which uses data from MEMS sensors to sound a buzzer and send out alerts over an IoT connection in the event of a fall. In conclusion, this
Fall detection systems, in summary, are essential for improving people's safety and wellbeing, especially when it comes to assisted living and healthcare. Significant progress has been made in these systems, and as the population ages and the need for dependable healthcare solutions rises, so too will their significance.

Reference

1. Abou, L., Fliflet, A., Hawari, L., Presti, P., Sosnoff, J. J., Mahajan, H. P., Frechette, M. L., & Rice, L. A. (2022). The sensitivity of the fall detection feature on the Apple Watch among individuals who use wheelchairs. Assistive technology: the official journal of RESNA, 34(5), 619–625.
2. Abou, L., Fliflet, A., Presti, P., Sosnoff, J. J., Mahajan, H. P., Frechette, M. L., & Rice, L. A. (2023). Fall detection from a manual wheelchair. Assistive technology : the official journal of RESNA, 35(6), 523–531.

3. Sadi, M. S., Alotaibi, M., Islam, M. R., Islam, M. S., Alhmiedat, T., & Bassfar, Z. (2022). Finger-Gesture Controlled Wheelchair with Enabling IoT. Sensors (Basel, Switzerland), 22(22), 8716.
4. B. -S. Lin *et al*., "Fall Detection System With Artificial Intelligence-Based Edge Computing," in *IEEE Access*, vol. 10, pp. 4328-4339, 2022, doi: 10.1109/ACCESS.2021.3140164.
5. Sofia Yousuf Sheikh, Muhammad Taha Jilani, A ubiquitous wheelchair fall detection system using low-cost embedded inertial sensors and unsupervised one-class SVM, Journal of Ambient Intelligence and Humanized Computing, No. 1, p. 147-162, 2021
6. Mastorakis, G., Makris, D. Fall detection system using Kinect's infrared sensor. J Real-Time Image Proc 9, 635–646 (2014). https://doi.org/10.1007/s11554-012-0246-9
7. Ribeiro, O.; Gomes, L.; Vale, Z. IoT-Based Human Fall Detection System. *Electronics* 2022, *11*, 592. https://doi.org/10.3390/electronics11040592
8. Shu, F., Shu, J. An eight-camera fall detection system using human fall pattern recognition via machine learning by a low-cost android box. Sci Rep 11, 2471 (2021). https://doi.org/10.1038/s41598-021-81115-9
9. Quoc Thien Huynh and Uyen D. Nguyen and Binh Q. Tran, A Cloud-Based System for In-Home Fall Detection and Activity Assessment, IFMBE Proceedings, Id. Huynh2018ACS, 2018
10. S. S, S. Sheth, A. Kumar and B. Dwivedy, "An IoT Enabled Smart Wheelchair Solution for Physically Challenged People," 2023 2nd International Conference on Vision Towards Emerging Trends in Communication and Networking Technologies (ViTECoN), Vellore, India, 2023, pp. 1-5, doi: 10.1109/ViTECoN58111.2023.10157231.