A Hydrogen Production System Based on Ammonia Combustion Heat: Graded Decomposition and Parameter Analysis

Zongyao Kang, Bin Liu *, Jingzhong Huang, Hao Fan, Kaihui Wang

Shijiazhuang Tiedao University, School of Mechanical Engineering, 050043, Shijiazhuang, Hebei, China

Abstract. This study introduces a hydrogen production system that utilizes the heat from ammonia combustion for graded decomposition. About 17% of the ammonia undergoes combustion to provide heat for the subsequent decomposition of the remaining ammonia. To enhance economic efficiency and reduce costs, a design combining precious and non-precious metals is employed, aiming to decrease the usage of precious metal catalysts without compromising decomposition efficiency. Considering the required temperatures for the two catalysts, high and low-temperature decomposers are established to achieve cascaded energy utilization in the flue gas. The preheating temperature of ammonia before entering the decomposer plays a crucial role in both ammonia decomposition efficiency and the system's fuel consumption. Following optimization, the system yields 493.6kg/h of hydrogen with an inlet ammonia flow rate of 4000kg/h. Concurrently, the discharge temperature of the flue gas decreases to 378.59K, effectively utilizing a substantial portion of the energy. This study introduces a novel approach to designing an ammonia decomposition system using ammonia combustion as a heat source, and it serves as a reference for subsequent optimization.

1 Introduction

With the escalating environmental problems resulting from the combustion of fossil fuels, there is a continual increase in societal demand for clean energy. Hydrogen distinguishes itself among various renewable energy sources and is regarded as an ideal energy carrier[1]. Nevertheless, the development of hydrogen-based technologies has been relatively slow due to the high costs associated with establishing new infrastructure for hydrogen production, storage, and transportation[2]. Ammonia is regarded as an ideal hydrogen storage carrier due to its higher energy density and relatively well-established infrastructure[3]. The process of converting ammonia back into hydrogen post-storage and transportation has been the subject of extensive research among scholars.

The decomposition of ammonia into hydrogen requires high temperatures, and achieving complete decomposition necessitates the assistance of metal catalysts. Among these, Ru-based catalysts demonstrate the highest catalytic activity, enabling ammonia decomposition at a temperature as low as 773K [4]. Nevertheless, Ru is categorized as a precious metal, and its extensive application could result in prohibitively high costs. Therefore, the exploration of non-precious metal catalysts, characterized by lower catalytic activity but more economical costs, continues. Among these, Ni-based catalysts stand out as the most representative. Facilitated by Ni-based catalysts, ammonia can achieve decomposition at a temperature of 1073K. Presently, research on catalysts for ammonia decomposition has reached a certain level of maturity, underscoring the crucial importance of selecting an appropriate catalyst based on practical requirements.

The large-scale ammonia hydrogen production system utilizing the heat generated from ammonia combustion is a novel research direction. Devkota et al. [5] devised an on-site ammonia hydrogen production process capable of large-scale hydrogen production. This process utilizes the high-temperature flue gas generated from ammonia combustion to provide heat for ammonia decomposition. In this process, the ammonia combustion furnace can generate high-temperature flue gas at 1500K, whereas the ammonia decomposer operates at a lower temperature of 773K. Due to the substantial temperature difference between the two, there might be a wastage of high-quality energy. Moreover, exclusively relying on Ru-based catalysts could result in excessively high costs. Similarly, Makhlouf et al. [6] employed the heat generated from ammonia combustion to establish a large-scale ammonia hydrogen production system. In this system, the ammonia decomposer is directly heated by the flames from ammonia combustion, and the flue gas generated from combustion is employed to establish a power generation cycle that provides power for subsequent compression processes. However, in this system, the temperature required for the ammonia decomposer does not align with the combustion temperature. Additionally, the high-quality heat generated from combustion first provides heat for the decomposer using Ru-based catalysts and subsequently provides heat for the power generation cycle

*Corresponding author's email: liubin@stdu.edu.cn

at a higher required temperature, deviating from the concept of cascaded energy utilization. While current ammonia decomposition hydrogen production systems meet environmental requirements, there is still room for improvement in the utilization of ammonia combustion energy.

From the perspective of cascaded energy utilization, this paper introduces an ammonia grading decomposition hydrogen production system based on the heat generated from ammonia combustion. The system utilizes the high-temperature flue gas generated from ammonia combustion to provide energy for ammonia decomposition. Simultaneously, two decomposers filled with different metal catalysts are arranged: a high-temperature decomposer and a low-temperature decomposer. This design facilitates a more rational utilization of energy in the high-temperature flue gas. Moreover, the incorporation of non-precious metal catalysts provides the system with a cost advantage. In the end, a parameter analysis is performed on the preheating temperature of ammonia to identify the optimal operating parameters.

2 System description

2.1 Ammonia decomposition simulation

In this project, theoretical modeling and simulation are carried out using Aspen Plus V11, and the chosen physical property calculation model is the Peng-Robinson model. In the designed system for this study, two catalysts, Ru/Al_2O_3 and Ni/Al_2O_3, are utilized for the ammonia decomposition reaction. According to pertinent reports, the Temkin-Phyzev reaction kinetics model is suitable for ammonia decomposition reactions:

$$r=k_{app}[(\frac{P_{NH_3}^2}{P_{H_2}^3})^{\beta}] \quad (1)$$

$$k_{app}=k_{0,app}\exp^{(\frac{-E_{app}}{RT})} \quad (2)$$

Where k_{app} is the reaction rate constant, $k_{0,\,app}$ is the pre-exponential factor, E_{app} stands for activation energy, R is the universal gas constant and T denotes the reaction temperature in Kelvin. The data for the two catalysts are presented in Table 1.

Table 1 Kinetic parameters of the reaction.

	$k_{0,\,app}$	E_{app}	β
Ru/Al_2O_3	6×10^8	117	0.27
Ni/Al_2O_3	3.16×10^5	102	0.2

2.2 Ammonia combustion

The RGibbs reactor, capable of predicting the maximum forward and reverse processes of a reaction, is utilized in this study to simulate ammonia combustion. In the ammonia decomposition hydrogen production system based on the heat generated from ammonia combustion, the critical factor is the temperature produced by ammonia combustion. Therefore, in the subsequent research, the adiabatic flame temperature of ammonia under different conditions will be analyzed.

2.3 Overall System Process

The ammonia grading decomposition hydrogen production system based on the heat generated from ammonia combustion is illustrated in the Fig.1. The system incorporates three pathways: the main route, the heating supply route, and the circulation route. The main route represents the ammonia decomposition pathway. The feed ammonia is preheated in the intermediate heat exchanger before being introduced into the high-temperature decomposer (fill Ni/Al_2O_3) for primary decomposition, followed by entering the low-temperature decomposer (fill Ru/Al_2O_3) for secondary decomposition. The ultimate product is high-purity hydrogen, which is discharged from the system. The heating supply route is the pathway where approximately 17% of the incoming ammonia is used for combustion. The fuel ammonia, preheated in the intermediate heat exchanger, is introduced into the combustion furnace for burning. The high-temperature flue gas produced provides heat successively to the high-temperature decomposer, low-temperature decomposer, and the intermediate heat exchanger. The circulation route involves the recycling of nitrogen adsorbed by the PSA system and some flue gas. The system operates with a feed ammonia flow rate of 4000 kg/h, yielding a hydrogen production rate of 493.6 kg/h.

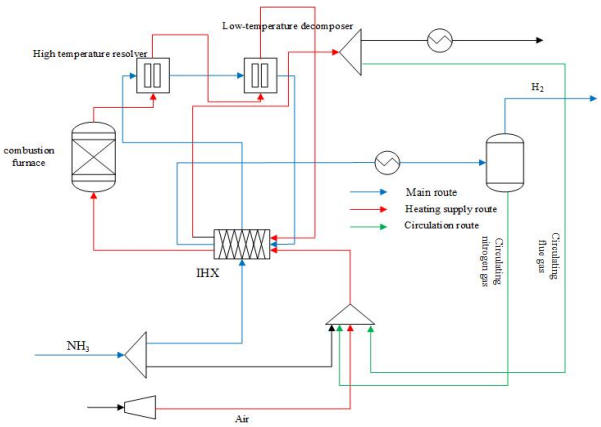

Fig. 1 Overall system chart

3 Analysis and discussion

3.1 Ammonia combustion

The equivalence ratio is a critical factor influencing the ammonia combustion temperature. Under different equivalent ratio, the adiabatic flame temperature of ammonia combustion changes obviously, and reaches a maximum value of 2073K when equivalent ratio is 1.0[5]. The current temperature range for ammonia decomposition is between 773-1073K[7]. Using the high-temperature flue gas generated from ammonia combustion for heat supply would result in significant energy waste. Therefore, reducing the ammonia combustion temperature is a feasible method to enhance efficiency. However, the practice of reducing or increasing the equivalence ratio to lower the ammonia combustion temperature is not environmentally friendly.

This is because ammonia combustion in either excess or insufficient oxygen conditions produces a significant amount of nitrogen oxides. As shown in Fig.2, during rich oxygen combustion, the concentration of NO and NO_2 is significantly higher compared to lean oxygen combustion. This is due to the presence of O/H radicals, which expedite the conversion of NH_i (i=0, 1, 2) towards NO. Furthermore, according to previous reports, the concentration of another nitrogen oxide, N_2O, will increase during combustion under oxygen-deficient conditions[8]. In addition to adjusting the equivalence ratio to lower the ammonia combustion temperature, recycling the combustion flue gas and the nitrogen removed from the PSA system is also a viable approach. As shown in the Fig.3, with the increase of the flue gas reflux rate, the flame temperature and the concentration of NO and NO_2 gradually decrease. When the flue gas is recycled, the nitrogen and water it carries will have considerable heat, thus reducing the flame temperature of ammonia combustion and thereby reducing nitrogen oxide production. Ultimately, in the designed system, the adiabatic flame temperature of ammonia combustion is 1611.06 K. After providing heat to the decomposer and intermediate heat exchanger, the flue gas temperature decreases by 378.59 K, effectively utilizing most of the available heat. The energy utilization efficiency of high temperature flue gas produced by ammonia combustion can be calculated by the following formula:

$$\eta = \frac{\sum_i Q_i}{Q_{NH_3}} \tag{3}$$

Where Q_{NH3} is the energy generated by ammonia combustion, and Q is the energy consumed. The subscript i is the resolver and the intermediate heat exchanger. The calculated efficiency is 93.9%.

3.2 Ammonia decomposition

As mentioned earlier, the flame temperature of ammonia combustion is high. If the heat generated by ammonia combustion is used for the ammonia decomposition reaction, a significant amount of high-quality heat will be wasted. Therefore, two decomposers can be set up: a high-temperature decomposer and a low-temperature decomposer. In the high-temperature decomposer, a lower-cost but higher-temperature- demanding Ni/Al_2O_3 catalyst is used, while in the low-temperature decomposer, a lower-temperature-demanding Ru/Al_2O_3 catalyst is employed. The high-temperature flue gas generated by ammonia combustion will first provide the required heat for the high-temperature decomposer, and after its temperature decreases, it will then supply the necessary heat for the low-temperature decomposer. This creates an energy utilization gradient, resulting in cost savings. Due to the higher temperature in the high-temperature decomposer and the higher ammonia concentration, most of the ammonia decomposition occurs in the high-temperature decomposer. In the high-temperature decomposer, the ammonia decomposition rate is 75%, while the remaining 25% of ammonia is decomposed in the low-temperature decomposer. The low-temperature decomposer operates at a lower temperature, and the gas entering it has a lower ammonia concentration. Therefore, a higher catalytic activity Ru/Al_2O_3 catalyst is needed for the "finishing work." Fig.4 illustrates the ammonia decomposition curves of the high-temperature and low-temperature decomposers. A lower-cost but lower catalytic activity catalyst is used when the temperature and ammonia concentration are high, while a higher-cost but higher catalytic activity catalyst is used when the temperature is low, and the ammonia concentration is low, to complete the entire ammonia decomposition.

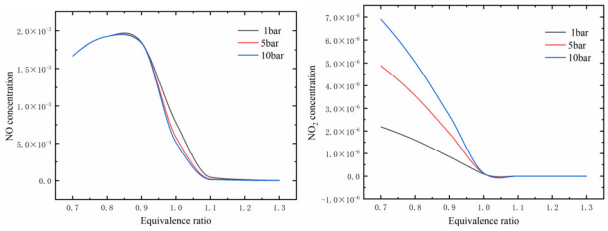

(a) (b)

Fig. 2 Nitrogen oxide production at different equivalent ratios (a)NO; (b)NO_2

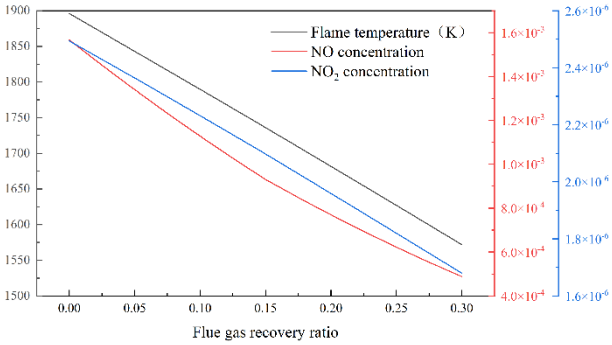

Fig. 3 Effect of flue gas recovery ratio

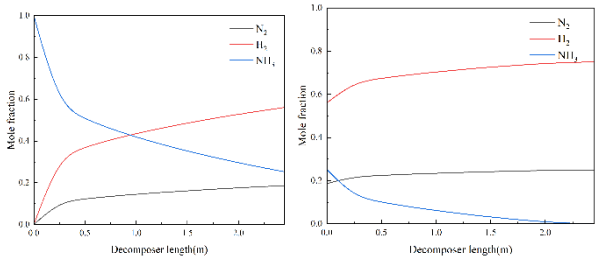

(a) (b)

Fig. 4 Ammonia decomposition curves: (a) High-temperature decomposer; (b) Low-temperature decomposer

3.3 Ammonia preheating temperature

Fig.5 shows the variation curve of the fuel ammonia-to-feed ammonia ratio at different ammonia preheating temperatures. At a certain temperature, as the preheating temperature increases, the ratio of the two decreases continuously, implying savings in fuel and increased hydrogen production. However, if the preheating temperature decreases to 773K or below, ammonia will not completely decompose due to its lower inherent energy. When the preheating temperature reaches 1073K and above, the required fuel ammonia for the system will increase. This is mainly due to the limitations of the pinch temperature of the intermediate heat exchanger. In this situation, the temperature of the flue gas after decomposition is below 1073K, making it unable to

preheat the feed ammonia to the specified temperature. Therefore, more fuel is needed to provide the required energy for the system.

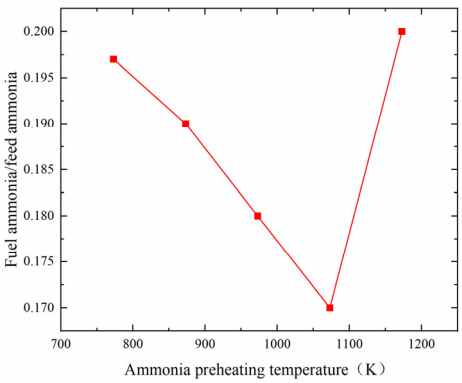

Fig. 5 The ratio of fuel ammonia to feedstock ammonia at different preheating temperatures.

3.4 Experimental Facilities

The key technology of hydrogen production by ammonia decomposition is studied, and the feasibility of the system is verified by small-scale experiments. In this experiment, Ni/Al_2O_3 was used as catalyst. Al_2O_3 is a highly dispersed porous material with a large surface area, porosity and stability, making it a suitable carrier. The experiment utilized electric heating to provide heat for ammonia decomposition, and a pressure swing adsorption device was employed to remove nitrogen from the hydrogen-nitrogen mixture produced during decomposition. The experimental setup is shown in Fig.6. Currently, the facility operates steadily with a hydrogen production rate of 15 Nm^3/h, and the hydrogen purity has reached 99.999%, within 48 hours of the test time, the catalyst is stable and has high stability, proving the feasibility and long-term stability of hydrogen production from ammonia decomposition.

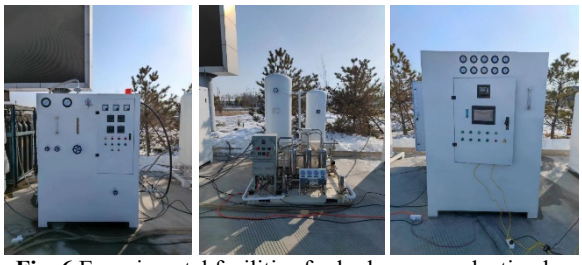

Fig. 6 Experimental facilities for hydrogen production by ammonia decomposition

4 Conclusion

This paper utilizes Aspen Plus to establish a novel ammonia grading decomposition system based on the combustion heat of ammonia and conducts a parameter analysis to determine the optimal operating conditions. Two different catalysts are employed, and high-temperature and low-temperature decomposers are configured accordingly. This design allows for a more reasonable utilization of high-temperature flue gas in line with the concept of cascade utilization. Simultaneously, the use of low-cost non-precious metal catalysts enhances the economic viability of the system, making it more suitable for large-scale implementation. The summarized conclusions are as follows:

(1) The system utilizes 17% of the incoming ammonia for combustion, ultimately yielding 493.6 kg/h of hydrogen with an input of 4000 kg/h of ammonia.

(2) The design of the circulation loop reduces the flame temperature of ammonia combustion and decreases the production of nitrogen oxides.

(3) The high-temperature flue gas generated from ammonia combustion can support the use of low-cost catalysts with higher required temperatures for ammonia decomposition. Employing catalysts with different required temperatures aligns more with the concept of energy cascade utilization.

Acknowledgments

This work was supported by the Science and Technology Program of Hebei (No.23319904L), and the science and technology program of Hebei Academy of Sciences (2023PF03).

Reference

1. C. Claus Hviid, J. Tue, S. Rasmus Zink, N. Rasmus Zink. Catal. Today., 111,140-4 (2006)
2. L. Krystina E., D. Michael D., K. Danielle F., Int. J. Hydrogen Energy., 44,3580-93 (2019)
3. M. Eric, M. James, M. Jon, Renewable Energy., 72,51-61 (2014)
4. M. Shreya, D. Surya V., S. Anna, L. Carl R. F., W. Gang. Appl. Catal., B., 226,162-81 (2018)
5. D. Sijan, S. Beom-Ju, M. Ji-Hun, K. Tae-Ha, Y. Hyung Chul, M. Shaukat Ali, et al., Fuel., 342 (2023)
6. M. Camel, K. Nouaamane. Int. J. Hydrogen Energy., 46,34777-87(2021)
7. L. Ilaria, G. Xènia, V. Xavier, L. Jordi, Ind. Eng. Chem. Res., 2021;60:18560-611.
8. K. Caneon, M. Mayank, Energy Convers. Manage., 251 (2022)